ENJOY QUALITY!

CERTIFIED QUALITY SYSTEM UNI EN ISO 9001:2000

SINCERT DNV

Coram®

REGGISPINTA DISTACCO FRIZIONE PER AUTO
CLUTCH RELEASE BEARING FOR CARS
BUTEE D'EMBRAYAGE POUR VOITURES

ALFA ROMEO

MODELLO	DIMENSIONI	ANNO	RIF ORIGINALE	RIF CORAM	NOTE
ALFA 33					
Tutti i tipi/All types/Tous types		83	60581569	**C0036**	
Tutti i tipi/All types/Tous types		83	510513	**C0036**	
Tutti i tipi/All types/Tous types		83	530916	**C0036**	
ALFA 75					
1.6-1.8-2.0-2.0 Turbo diesel		85	60521134	**C0037**	
ALFA 90					
1.8-2.0-2.0i		84-87	60521134	**C0037**	
ALFA 145/146					
1.3-1.6-1.7		94-97	60581569	**C0036**	
1.4i-1.6i-1.8i t.s. 16v		95->	60806065	**C0024**	
1.4i.e - 16 v T.S.		96-01	60805112	**C0011**	
1.9 Turbo diesel		94-95	60806065	**C0024**	
2.0i 16v		2/96	60806065	**C0024**	
ALFA 145/146					
1.9 JTD		99->	7778277	**C0234**	
ALFA 147					
ALFA 155					
1.8-2.0 Twin Spark-1.9 TD-2.0 TD		92->	60806065	**C0024**	
2.5 V6-2.5 TD		92->	60805112	**C0011**	
2.0 Turbo Q4		11.91->	7778277	**C0234**	
2.5 TD		07.93->	7778277	**C0234**	
ALFA 156					
1.9 JTD-2.4 JTD		97->	7778277	**C0234**	
2.5 V6 24Val.		97->	7778277	**C0234**	
ALFA 164					
2.0 Twin Spark - 2.0 i.e Turbo S.		87-97	60805112	**C0011**	
2.5 Turbo Diesel - 3.0 i.e		87-89	164001204201	**C0011**	
2.5 Turbo Diesel - 3.0 V6 - 3.0 V6 24V		89->	7778277	**C0234**	
2.0 V6 Turbo		90->	7778277	**C0234**	

REGGISPINTA DISTACCO FRIZIONE PER AUTO
CLUTCH RELEASE BEARING FOR CARS
BUTEE D'EMBRAYAGE POUR VOITURES

1

follows ALFA ROMEO

MODELLO	DIMENSIONI	ANNO	RIF ORIGINALE	RIF CORAM	NOTE
ALFA 166					
2.0 V6		98->	7778277	**C0234**	
2.4 JTD		98-00	7778277	**C0234**	
2.5 V6 24V		98-00	7778277	**C0234**	
3.0 V6 24V		98-00	7778277	**C0234**	
ALFA 175					
		68-72	60516873	**C0035**	
ALFA 2000					
GT-GTV		71	60516873	**C0035**	
GT-GTV		71	10548,12042,02	**C0035**	
ALFASUD					
Tutti i tipi/All types/Tous types		71	60581569	**C0036**	
Tutti i tipi/All types/Tous types		71	510513	**C0036**	
ALFETTA					
Tutti i tipi/All types/Tous types		72-85	60521134	**C0037**	
Tutti i tipi/All types/Tous types		72-85	11600,12042,02	**C0037**	
ARNA					
Tutti i tipi/All types/Tous types		84	60581569	**C0036**	
Tutti i tipi/All types/Tous types		84	510513	**C0036**	
GIULIA					
1.3-1.6		69-78	60516873	**C0035**	
1.3-1.6		69-78	10548,12042,02	**C0035**	
GIULIETTA					
Tutti i tipi/All types/Tous types		79-85	60521134	**C0037**	
Tutti i tipi/All types/Tous types		79-85	11600,12042,02	**C0037**	

REGGISPINTA DISTACCO FRIZIONE PER AUTO
CLUTCH RELEASE BEARING FOR CARS
BUTEE D'EMBRAYAGE POUR VOITURES

follows ALFA ROMEO

MODELLO	DIMENSIONI	ANNO	RIF ORIGINALE	RIF CORAM	NOTE
GTV					
1.8 16v Twin Spark		98->	60805112	**C0024**	
2.0 Twin Spark i.e 16v		95	60805112	**C0024**	
2.0 Turbo V6		95-98	60806065	**C0011**	
2.0 Turbo V6		98->	7778277	**C0234**	
3.0 V6 24V		98->	7778277	**C0234**	
L.C.V.					
30-33-35-40		78->	93808387	**C0025**	
35-40-45-49 AR10 TURBO		85->	93808387	**C0025**	
SPIDER					
1.3 Junior-1.6-1.8-2.0		69-77	60516873	**C0035**	
2.0 Twin Spark i.e 16v		95->	60806065	**C0024**	
3.0 Turbo V6		95->	60805112	**C0011**	
2.0 Turbo V6		98->	7778277	**C0234**	
3.0 V6 24V		98->	7778277	**C0234**	
SZ					
3.0 V6			60521134	**C0037**	

ALPINA

B-SERIE					
10 (B10) 187 KW - 11 (B11) 187 KW			1204419	**C0101**	
6 (B6) 160 KW			1204525	**C0103**	
7 (B7 Turbo - Turbo Coupe) 220 KW			1204419	**C0101**	
7 (B7 S Turbo - Turbo Coupe) 242 KW			1204419	**C0101**	
9 (B9) 180 KW			1204410	**C0101**	
1 (1C) 125 KW			1204525	**C0103**	

ARO

FAMILIA					
MLS4		85	7700638870	**C0043**	
MODELLO 10					

REGGISPINTA DISTACCO FRIZIONE PER AUTO
CLUTCH RELEASE BEARING FOR CARS
BUTEE D'EMBRAYAGE POUR VOITURES

1

AUDI

MODELLO	DIMENSIONI	ANNO	RIF ORIGINALE	RIF CORAM	NOTE
AUDI 50					
1.1-1.2-1.3		74-88	084141165D	**C0077**	
AUDI 60					
		71	111141165A	**C0075**	
AUDI 75					
		75	111141167C	**C0075**	
AUDI 80					
Tutti i tipi/All types/Tous types.		72-86	019141165B	**C0076**	
AUDI 80 Quattro					
Tutti i tipi/All types/Tous types.		72-86	113141165B	**C0076**	
AUDI 80					
Tutti i tipi/All types/Tous types.		72-86	088141165A	**C0076**	
Tutti i tipi/All types/Tous types		86->	01E141165B	**C0230**	
AUDI 80 Quattro					
Tutti i tipi/All types/Tous types		86->	012141165D	**C0230**	
AUDI 90					
Tutti i tipi/All types/Tous types		71	111141165A	**C0075**	
2.0-2.2-2.2Quattro		84-87	113141165D	**C0076**	
1.6 Turbo diesel		84-88	113141165D	**C0076**	
1.6 Turbo diesel		88-92	01E141165B	**C0230**	
2.0		88-92	012141165D	**C0230**	
2.2-2.3		87-91	012141165D	**C0230**	
AUDI 100					
18		69-71	111141165C	**C0075**	
AUDI 100 Avant/Quattro					
Tutti i modelli/All types/Tous types		71-87	113141165D	**C0076**	
1.6		92-94	01E141165B	**C0230**	
1.8-2.0 D-2.0 TD-2.2-2.4 D-2.5 TDI		88->	012141165D	**C0230**	

REGGISPINTA DISTACCO FRIZIONE PER AUTO
CLUTCH RELEASE BEARING FOR CARS
BUTEE D'EMBRAYAGE POUR VOITURES

follows AUDI

MODELLO	DIMENSIONI	ANNO	RIF ORIGINALE	RIF CORAM	NOTE
AUDI 200					
2.2 - 2.2 Turbo - 2.2 Turbo Quattro		79-88	113141165D	**C0076**	
2.2 Turbo - 2.2 Turbo Quattro		88-90	01E141165B	**C0230**	
AUDI 5000					
2.0-2.2		78-84	113141165D	**C0076**	
AUDI A2 (8Z0)					
1.4		00->	02T141170	**C0259**	
AUDI A2					
1.4 TDI		00->	02A141165 G	**C0181**	
1.6 FSI		02->	02T141170	**C0259**	
AUDI A3					
1.6 (8P1)		03->	02T141170	**C0259**	
1.6		96->	020141165 H	**C0078**	
1.6 FSI		03->	02T141170	**C0259**	
1.8 - 1.8 Turbo		96->	02A141165 G	**C0181**	
1.9 Turbo Diesel Tdi		96->	02A141165 G	**C0181**	
AUDI A3 Sportback					
1.6		96->	02T141170	**C0259**	
1.6 FSI		96->	02T141170	**C0259**	
AUDI A4					
1.6-1.8		11/94	01E141165B	**C0230**	
1.9 TDi - 2.6 V6 - 2.8 VR6		95->	01E141165B	**C0230**	
1.8 Quattro - 1.8 Turbo		95->	012141165D	**C0230**	
AUDI A6 Avant/Quattro					
1.8 - 1.9 TDi - 2.0 - 2.3 - 2.5TDi		10/94	01E141165B	**C0230**	
2.6 - 2.8 - S6		11/94	012141165D	**C0230**	

REGGISPINTA DISTACCO FRIZIONE PER AUTO
CLUTCH RELEASE BEARING FOR CARS
BUTEE D'EMBRAYAGE POUR VOITURES

1

follows AUDI

MODELLO	DIMENSIONI	ANNO	RIF ORIGINALE	RIF CORAM	NOTE
AUDI A8					
2.8 V6 Quattro		6/94	01E141165B	**C0230**	
2.8 30 val.		96->	012141165D	**C0230**	
AUDI CABRIO					
1.8 - 1.9 Tdi		95->	01E141165B	**C0230**	
2.0E - 2.0i 16v - 2.3E - 2.6E -2.8E		91->	012141165D	**C0230**	
AUDI COUPE'					
Tutti i tipi\All types\Tous types		->10/88	113141165D	**C0076**	
1.8 - 2.0 - 2.2 - 2.3 E		11/89->	01E141165B	**C0230**	
2.6E - 2.8E		89->	012141165D	**C0230**	
AUDI F12 - F102					
Tutti i tipi\All types\Tous types		71	111141165A	**C0075**	
AUDI 91/4 - 1000 (MUNGA)					
Tutti i tipi\All types\Tous types			111141167C	**C0075**	
TT COUPE					
1.8 T		98->	02A141165 G	**C0181**	
TT ROADSTER					
1.8 T		99->	02A141165 G	**C0181**	
V8					
3.6 - 4.2 32 Val.		88-93	012141165D	**C0230**	

REGGISPINTA DISTACCO FRIZIONE PER AUTO
CLUTCH RELEASE BEARING FOR CARS
BUTEE D'EMBRAYAGE POUR VOITURES

AUTHI

MODELLO	DIMENSIONI	ANNO	RIF ORIGINALE	RIF CORAM	NOTE
MINI					
850		72-75	GRB201	**C0085**	
1.0 - 1.3 GT		72-75	GRB201	**C0085**	

AUTOBIANCHI

A112					
Tutti i tipi\All types\Tous types		69->	4192150	**C0009**	
Tutti i tipi\All types\Tous types			4304832	**C0009**	
Tutti i tipi\All types\Tous types			4439919	**C0009**	
GIARDINIERA					
500		74->	4304521	**C0004**	
Y10					
Tutti i tipi\All types\Tous types		85-92	7662270	**C0009**	
Tutti i tipi\All types\Tous types			5991916	**C0027**	
Tutti i tipi\All types\Tous types		7/92->	7625958	**C0099**	

BARKAS

B1000					
1.1			1800510100	**C0165**	

REGGISPINTA DISTACCO FRIZIONE PER AUTO
CLUTCH RELEASE BEARING FOR CARS
BUTEE D'EMBRAYAGE POUR VOITURES

1

BEDFORD VAUXHALL

MODELLO	DIMENSIONI	ANNO	RIF ORIGINALE	RIF CORAM	NOTE
ASTRA					
1.3 Van		80-84	668642	**C0048**	
1.3 Van eng. N/S 1696057/19569999		84->	668642	**C0048**	
1.3Van eng. N/S 1696058/19570000		84->	668642	**C0048**	
1.3		86-89	668652	**C0050**	
1.6 Van		80-84	668645	**C0049**	
1.6 Van (S eng.)		84->	668645	**C0049**	
1.6 Van diesel		82-85	668645	**C0049**	
1.6 Van diesel eng. 16D14310804		85->	668645	**C0049**	
1.6 Van diesel eng. 16D14310805->16DA14498630		85-87	668645	**C0049**	
1.6 Diesel		86-88	668652	**C0050**	
1.6 Diesel ch.14478631		->88	668651	**C0151**	
1.7 Diesel		89->	668652	**C0050**	
1.7 Diesel		89->	668652	**C0050**	
1.7 Turbo Diesel		91->	668651	**C0151**	
ASTRAMAX					
1.3 eng 13 N/S 1696057/19569999		85->	668642	**C0048**	
1.3 eng 13 N/S 1696058/19570000		85->	668642	**C0048**	
1.6 (S eg.)- 1.6 Diesel		85->	668645	**C0049**	
1.6 eng. 16D14310804		85->	668645	**C0049**	
1.6 eng. 16D14310805		85-87	668645	**C0049**	
16DA14498630			668645	**C0049**	
BRAVA					
2.2 Diesel		88-90	4293481	**C0235**	
2.3 - 2.5 Diesel - 2.5 4x4 Diesel		88->	4293481	**C0235**	
CF VAN					
1.6 Petrol		69-71	8827050	**C0202**	
1.8 Petrol - 2.0 Petrol		71-84	668645	**C0048**	
2.0 Diesel GM - 2.1 Diesel GM		76-80	668645	**C0048**	
2.3 Diesel GM		80-84	668645	**C0048**	
2.3 Petrol		71-84	8827050	**C0202**	
2.3 Petrol Z.F.		->84	668645	**C0048**	
PERKINS Diesel		69-76	8827050	**C0202**	
CF2					
2.0 4-5 Speed Petrol - 2.3 Diesel		5/84->	668642	**C0048**	
CF97000					
2.1 Opel diesel		76->	668642	**C0048**	

REGGISPINTA DISTACCO FRIZIONE PER AUTO
CLUTCH RELEASE BEARING FOR CARS
BUTEE D'EMBRAYAGE POUR VOITURES

follows BEDFORD VAUXHALL

MODELLO	DIMENSIONI	ANNO	RIF ORIGINALE	RIF CORAM	NOTE
KB PICK-UP					
1.6 - 1.6 4wd - 2.0 Diesel - 2.2 Diesel		80-88	R91132063	**C0235**	
2.0 4 wd Diesel - 2.2 4wd Diesel		81-88	R91132063	**C0235**	
MIDI VAN					
1.8 Petrol - 2.0 Diesel		85-88	R91132063	**C0235**	
2.0 Petrol - 2.2 Diesel		88-94	R91132063	**C0235**	
1.6-1.8-2.0-2.3 (Petrol/Diesel)		69-76	8827050	**C0202**	
BMW					
3 SERIES (E21)					
315		81-83	1204419	**C0101**	
316		75-82	1204419,4	**C0101**	
318-318i-		75-82	1207275	**C0101**	
320/4-320i(USA)		75-82	1225203	**C0101**	
320/6		77-82	1204525	**C0103**	
320i/4		75-78	1204525	**C0103**	
323i		78-82	1204525	**C0103**	
3 SERIES (E30)					
316 4 Speed		82-88	1204419	**C0101**	
316 5 Speed		82-87	1204419,4	**C0101**	
316i		87-88	1207275	**C0101**	
318i 4 Speed		82-87	1225203	**C0101**	
318i 5 Speed		83-87	1223366	**C0101**	
318i Touring		89->	1225203	**C0101**	
320i		82-84	1204525	**C0103**	
320i - 320i Touring		84-91	1223366	**C0101**	
323i		82-84	1204525	**C0103**	
323i		84-86	1223366	**C0101**	
324d - 324 td		85-90	1223366	**C0101**	
325e		85-87	1223366	**C0101**	
325i - 325i Turing - 325i Cabrio		85-94	1223366	**C0101**	
325 ix - 325 ix Turing		85-93	1223366	**C0101**	

REGGISPINTA DISTACCO FRIZIONE PER AUTO
CLUTCH RELEASE BEARING FOR CARS
BUTEE D'EMBRAYAGE POUR VOITURES

1

follows BMW

MODELLO	DIMENSIONI	ANNO	RIF ORIGINALE	RIF CORAM	NOTE
3 SERIES (E36)					
316 Compact		91->	1204419	**C0101**	
316i Coupe		93->	1204419,4	**C0101**	
318i		90->	1207275	**C0101**	
318ti Compact		94->	1225203	**C0101**	
318i S Coupe		92->	1223366	**C0101**	
318tds-318tds Compact		94->	1223366	**C0101**	
320		91->	1223366	**C0101**	
320i Coupe		94->	1223366	**C0101**	
323 Coupe - Cabrio		95->	1223366	**C0101**	
325i		90->	1223366	**C0101**	
325 Coupe - Cabrio		92->	1223366	**C0101**	
325 td		91->	1223366	**C0101**	
325 tds		93->	1223366	**C0101**	
328 24 v		10/94->	1223366	**C0101**	
5 SERIES (E12)					
518		74->	1204225	**C0102**	
581 RHD		75->	1204225	**C0102**	
518		->81	1204419	**C0101**	
518i		->79	1204419,4	**C0101**	
520/4		->79	1204525	**C0103**	
520/6		77-81	1204525	**C0103**	
525		73-81	1223366	**C0101**	
528 - 528 (USA) - 530 (USA)		75-81	1223366	**C0101**	
5 SERIES (E28)					
518-518i		81-87	1204419	**C0101**	
520i		81-84	1204525	**C0103**	
520i		84-87	1204419,4	**C0101**	
524d		86-88	1207275	**C0101**	
524td		83-85	1225203	**C0101**	
525e		83-87	1223366	**C0101**	
525i		81-84	1223366	**C0101**	
528i-528 (USA)		81-86	1223366	**C0101**	
533i-533 (USA)		82-88	1223366	**C0101**	
535i		85-87	1223366	**C0101**	
5 SERIES (E34)					
518i		89-94	1204419	**C0101**	
520i-524td		88-92	1204419,4	**C0101**	
525i		88-90	1207275	**C0101**	
530-535i		88-92	1225203	**C0101**	
540i - 540i Touring		94->	1223366	**C0101**	

REGGISPINTA DISTACCO FRIZIONE PER AUTO
CLUTCH RELEASE BEARING FOR CARS
BUTEE D'EMBRAYAGE POUR VOITURES

follows BMW

MODELLO	DIMENSIONI	ANNO	RIF ORIGINALE	RIF CORAM	NOTE
6 SERIES (E24)					
628 CSi		79-84	1204419	**C0101**	
630 CS		76-79	1207275	**C0101**	
633 CSi		76-84	1225203	**C0101**	
635 CSi		83-87	1223366	**C0101**	
635 CSi		87-91	1223366	**C0101**	
7 SERIES (E23)					
728		77-79	1204419	**C0101**	
728i		79-84	1204419,4	**C0101**	
730		77-79	1207275	**C0101**	
732i		79-83	1225203	**C0101**	
733i		77-79	1223366	**C0101**	
735i-iL		79-86	1204419	**C0101**	
7 SERIES (E32)					
730i-iL		86-87	1207275	**C0101**	
730i-iL eng. M30		87-94	1225203	**C0101**	
735i-iL		86-87	1223366	**C0101**	
735i-iL		87-92	1204419	**C0101**	
7 SERIES (E38)					
728i-iL		95->	1223366	**C0101**	
730i-iL eng. M60		94->	1223366	**C0101**	
2002					
2002		71-73	1200627	**C0100**	
2002 RL -2002 US		73-75	1204225	**C0102**	
2002 RL		71-73	1204224	**C0100**	
2002 TI		71-75	1200627	**C0100**	
2002-Touring		73-75	1200023	**C0102**	
2500					
2500		->73	1204225	**C0102**	
2500-2.5CS		73-77	1223366	**C0101**	
2800					
2800-2800CS		->73	1204225	**C0102**	
2800-2800CS		73-77	1223366	**C0101**	

REGGISPINTA DISTACCO FRIZIONE PER AUTO
CLUTCH RELEASE BEARING FOR CARS
BUTEE D'EMBRAYAGE POUR VOITURES

1

follows BMW

MODELLO	DIMENSIONI	ANNO	RIF ORIGINALE	RIF CORAM	NOTE
3000					
3000C-3000CS-3.0CSi-CSL-Si		->73	1204225	**C0102**	
3000C-3000CS-3.0CSi-CSL-Si		73-77	1223366	**C0101**	
3300					
3300		73-77	1223366	**C0101**	
3300i		77-78	1223366	**C0101**	
M SERIES					
M3 - M3 Cabrio - M3 Sports		86-90	1223366	**C0101**	
M3 3.0 Coupe & Cabrio		93-95	1223366	**C0101**	
M3 3.2 Coupe & Cabrio		95->	1223366	**C0101**	
M5 3.5		80-93	1223366	**C0101**	
M5 3.5 Csi		84-91	1223366	**C0101**	
M5 3.8		92-95	1223366	**C0101**	
Z1					
2.5		88-91	1223366	**C0101**	
Z3 Roadster					
1.8 -1.9 - 2.8 - 2.8 Coupe - 3.2 - 3.2 Coupe		96->	1223366	**C0101**	

CHEVROLET

PICK UP / SEDAN					
			909422	**C0152**	
OPALA BRASILE					
			909422	**C0152**	

REGGISPINTA DISTACCO FRIZIONE PER AUTO
CLUTCH RELEASE BEARING FOR CARS
BUTEE D'EMBRAYAGE POUR VOITURES

CITROËN

MODELLO	DIMENSIONI	ANNO	RIF ORIGINALE	RIF CORAM	NOTE
2 CV					
Tutti i tipi/All types/Tous Types		70-90	AM31401C	**C0080**	
2 CV 6					
Tutti i tipi/All types/Tous Types		82-90	95494929	**C0079**	
ACADIANE					
Tutti i tipi/All types/Tous Types		78-82	95616712	**C0080**	
Tutti i tipi/All types/Tous Types		82-90	95494929	**C0079**	
AMI					
Ami 6		68-78	95616712	**C0080**	
Ami 8		68-78	95616712	**C0080**	
Ami Super		74-77	5478534	**C0081**	
AX					
1.0-1.1-1.4 GTi-1.4d-1.5d		86-95	96050128	**C0060**	
Axel 1.1-1.2		84-90	95577787	**C0081**	
1.0 - 1.5 D		92-98	9614677380	**C0066**	
BERLINGO					
1.7-1.9 Diesel			96050128	**C0060**	
1.1i (MFHDZ) - 1.4 i (MFKFX)		96->	9614677380	**C0066**	EVEN VAN VERSION
1.8 i (MFLFX)		97->	9614677380	**C0066**	EVEN VAN VERSION
1.8 D (MFA9A)		98->	9614677380	**C0066**	EVEN VAN VERSION
1.9 D (MFDJY)		96->	9614677380	**C0066**	EVEN VAN VERSION
1.9 D (MFWJZ)		98->	9614677380	**C0066**	EVEN VAN VERSION

REGGISPINTA DISTACCO FRIZIONE PER AUTO
CLUTCH RELEASE BEARING FOR CARS
BUTEE D'EMBRAYAGE POUR VOITURES

1

follows CITROËN

MODELLO	DIMENSIONI	ANNO	RIF ORIGINALE	RIF CORAM	NOTE
BX					
BX14		82-88	96034269	**C0046**	
BX14		88-91	96050128	**C0060**	
BX15		->89	97501451	**C0059**	
BX15		89-93	96050128	**C0060**	
BX16		82-89	97501451	**C0059**	
BX16		89-93	96050128	**C0060**	
BX17d-Td		88-93	91537419	**C0060**	
BX19		84-89	97501451	**C0059**	
BX19GTi 16v		87-92	96050128	**C0060**	
BX19GTi 1.9 16v		86-89	97501451	**C0059**	
BX19-BX19 4x4		88-93	96050128	**C0060**	
BX19d		83-89	97501451	**C0059**	
BX19d-Td		89-93	96050128	**C0060**	
C15 VAN					
1124		84-87	91537167	**C0046**	
1.124 Talbot		87-88	97501451	**C0059**	
1.124-1.294-1.360		87->	96050128	**C0060**	
954		84-87	96034269	**C0046**	
954 Talbot		87-88	97501450	**C0059**	
954 TU		88->	96050128	**C0060**	
1.8 diesel		84-89	97501450	**C0059**	
1.8 diesel		89->	96050128	**C0060**	
1.8 (VD-_) diesel		86-00	9614677380	**C0066**	
1.9 diesel		00->	9614677380	**C0066**	
C2					
1.1 - 1.4 Hdi - 1.6		03->	2041,68	**C0243**	
C25					
1.8 Petrol-2.0 Petrol - 2.5 Diesel 2.5td		81-94	96105389	**C0045**	
C3					
1.1 - 1.4 16V Hdi -1.4 Hdi-1.4 i -1.6 16V		02->	2041,68	**C0243**	
1.4 16V		03->	2041,68	**C0243**	
C3 PLURIEL					
1.4 - 1.6		03->	2041,68	**C0243**	
1.4 Hdi		04->	2041,68	**C0243**	

REGGISPINTA DISTACCO FRIZIONE PER AUTO
CLUTCH RELEASE BEARING FOR CARS
BUTEE D'EMBRAYAGE POUR VOITURES

follows CITROËN

MODELLO	DIMENSIONI	ANNO	RIF ORIGINALE	RIF CORAM	NOTE
C32					
2.0 Petrol		74-79	5429379	**C0083**	
C35					
2.0 Petrol-2.2 Diesel		74-79	5429379	**C0083**	
C5					
1.8 16v (85 Kw) - (CD6FZB-DC6FZE)		01->	2041.68	**C0243**	
C5 BREAK					
1.8 16V (DE6FZB-DE6FZE)		01->	2041,68	**C0243**	
2.0 16V - 2.0 16V Hpi (DERLZB)		01->	2041,68	**C0243**	SW
C8					
2.0 - 2.2		02->	2041,68	**C0243**	SW
CX					
2.0		79-87	96105389	**C0045**	
2.2 - 2.2 Pallas - 2.2 Diesel		74-91	96105389	**C0045**	
2.4 Gti - 2.4 Pallas - 2.5 Gti		76-91	96105389	**C0045**	
2.5 Diesel - CX 2.5 Turbo Diesel		78-87	96105389	**C0045**	
DISPATCH / JUMPY					
1.6 - 1.9 Diesel		95->	96050128	**C0060**	
1.9 Turbo Diesel		95->	2041,59	**C0237**	
DIANE					
Diane 4 - Diane 6		68-82	95616712	**C0080**	
Diane 6		82->	95494929	**C0079**	
EVASION					
1.8		97-02	9614677380	**C0066**	
2.0		94-02	9614677380	**C0066**	
2.0 16 V		98-00	9614677380	**C0066**	
2.0 - 16 V (22-U6)		00-02	2041,68	**C0243**	SW

REGGISPINTA DISTACCO FRIZIONE PER AUTO
CLUTCH RELEASE BEARING FOR CARS
BUTEE D'EMBRAYAGE POUR VOITURES

1

follows CITROËN

MODELLO	DIMENSIONI	ANNO	RIF ORIGINALE	RIF CORAM	NOTE
GS-GSA-GSX					
Tutti i tipi/All types/Tous types		71-72	5478534	**C0081**	
Tutti i tipi/All types/Tous types		74-85	96034262	**C0081**	
JUMPER					
1.9 Diesel - 1.9 Turbo Diesel		94->	2041.47	**C0236**	
1.9 Diesel		95->	9614677380	**C0066**	
2.0 - 2.0 4x4		94->	2041.47	**C0236**	
2.5 Diesel - 2.8 Turbo Diesel		94->	2041.47	**C0236**	
2.5 Diesel (Cambio ME5T)		94->	2041.59	**C0237**	
Autobus (244-Z_) 2.0 Hdi		02->	2041,68	**C0243**	
Autobus (230P) 2.5 D - TD - TDI - 4x4		94-02	2041.55	**C0250**	
Furgonato 1.9 D		98->	9614677380	**C0066**	
Furgonato (230L) 2.0 Hdi		01->	2041,68	**C0243**	
Furgonato (244) 2.0 Hdi		02->	2041,68	**C0243**	
Furgonato (230L) 2.5 D - TD - TDI - 4x4		94-02	2041.55	**C0250**	
Pianale piatto/Autotelaio (230) 2.5 D-TD-TDI		94-02	2041.55	**C0250**	
Pianale piatto/Autotelaio (230) 2.5D-TDI 4x4		00-02	2041.55	**C0250**	
Pianale piatto/Autotelaio (244) 2.0 Hdi		02->	2041,68	**C0243**	
JUMPY					
(U6U) 1.9 D		98->	2041,68	**C0243**	
(U6U) 2.0		00->	2041,68	**C0243**	
(U6U) 2.0 Hdi		99->	2041,68	**C0243**	
Furgonato 1.9 D		98->	2041,68	**C0243**	
Furgonato 2.0 Hdi		99->	2041,68	**C0243**	
Furgonato 2.0 i 16V		00->	2041,68	**C0243**	
LN					
LN 602-652		76-82	95616712	**C0080**	
LNA 652		82-85	95494929	**C0079**	
LNA 945-1124		82-86	91537167	**C0046**	
MEHARI					
4x2-4x4		68-82	95616712	**C0080**	
4x2		82->	95494929	**C0079**	
SAXO (S0 , S1)					
1.0 X -1.1X - 1.1 SX - 1.4 VTS - 1.5 D		96->	9614677380	**C0066**	
1.6 VTL, VTR, VTS		96->	9614677380	**C0066**	

REGGISPINTA DISTACCO FRIZIONE PER AUTO
CLUTCH RELEASE BEARING FOR CARS
BUTEE D'EMBRAYAGE POUR VOITURES

follows CITROËN

MODELLO	DIMENSIONI	ANNO	RIF ORIGINALE	RIF CORAM	NOTE
SAXO					
1.0 - 1.1		4/96->	2041,67	**C0060**	
1.4		4/96->	2041,67	**C0060**	
1.5 diesel		4/96->	2041,60	**C0060**	
1.6 - 1.6i 16V		4/96->	9614677380	**C0066**	
SYNERGIE/EVASION					
1.8i		96->	2041,67	**C0060**	
2.0i		95->	2041,60	**C0060**	
1.9 Turbo Diesel - 2.0 Turbo CT		94->	2041,59	**C0237**	
2.0 16v - 2.1 Turbo Diesel		96->	2041,59	**C0237**	
VISA					
652		78-82	95616712	**C0080**	
Club 652		82-85	95494929	**C0079**	
Special 652		78-82	95616712	**C0080**	
10E 954-11E-Super 1124-14 TRS		78-86	91537167	**C0046**	
GTi 1580-1.8 Diesel		84-88	97501451	**C0059**	
XANTIA					
Tutti i tipi/All types/Tous types		93->	96050128	**C0060**	
2.0i 16v-1.9 TD		93->	205041	**C0160**	
BREAK 2.0i 16v -1.9 TD		95->	205099	**C0160**	
XANTIA (X1)					
1.9 D		94-98	9614677380	**C0066**	
1.9 SD		96-98	9614677380	**C0066**	
BREAK 1.9 SD		97-98	9614677380	**C0066**	SW
XANTIA (X2)					
1.8 i - 1.8 i 16V - 1.9 SD - 2.0 TURBO		98->	9614677380	**C0066**	
BREAK 1.8 i -1.8 i 16V - 1.9 SD		98->	9614677380	**C0066**	SW
XM					
2.0 8v- 2.0i 8v -2.1 Diesel		89-94	96050128	**C0060**	
2.1 Turbo Diesel		90-94	2041,47	**C0236**	
2.0 16v - 2.0 Turbo		92->	2041,47	**C0236**	
3.0 V6 - 3.0 V6 24v		89-94	2041,47	**C0236**	

REGGISPINTA DISTACCO FRIZIONE PER AUTO
CLUTCH RELEASE BEARING FOR CARS
BUTEE D'EMBRAYAGE POUR VOITURES

1

follows CITROËN

MODELLO	DIMENSIONI	ANNO	RIF ORIGINALE	RIF CORAM	NOTE
XSARA					
1.4 - 1.8 - 1.8 16v		97->	2041,67	**C0060**	
1.5 Diesel - 1.9 Diesel		97->	2041,60	**C0060**	
1.4 - 1.8 - 1.8 16v (ch.nr.7729->)		97->	9614677380	**C0066**	
1.5 Diesel - 1.9 Diesel (ch.nr.7729->)		97->	9614677380	**C0066**	
XSARA (N1)					
1.4 i		97->	9614677380	**C0066**	
1.4 Hdi		03->	2041,68	**C0243**	
1.5 D-1.6 i-1.8 i-1.8 D-1.8 i 16V-1.8 i AUT		97-00	9614677380	**C0066**	
1.9 D		97-97	9614677380	**C0066**	
1.9 D		98->	2041,68	**C0243**	
2.0 HDI 90 (66 kW)		02/99->	2041,63	**C0243**	
2.0 16V		00->	2041,68	**C0243**	
2.0 HDi 109		01->	2041,68	**C0243**	
XSARA					
FAMILIARE 2.0 HDI 90		02/99->	2041,63	**C0243**	
XSARA (N1)					
2.0 HDi 90		99->	2041,68	**C0243**	
XSARA BREAK (N2)					
1.4 i		97->	9614677380	**C0066**	SW
1.4 Hdi		03->	2041,68	**C0243**	SW
1.5D- 1.6i- 1.8i - 1.8 i 16V -1.8D-1.8 i AUT		97-00	9614677380	**C0066**	SW
1.9 D		98->	9614677380	**C0066**	SW
2.0 16V		00->	2041,68	**C0243**	SW
2.0 HDI 90 (66 kW)		02/99	9633922480	**C0243**	
XSARA COUPE' (N0)					
1.4 i		98->	9614677380	**C0066**	
1.4 Hdi		03->	2041,68	**C0243**	
1.6 i -1.8 i - 1.8 i 16V - 1.9 D		98-00	9614677380	**C0066**	
1.6 16V		00->	9614677380	**C0066**	
2.0 16V		00->	2041,68	**C0243**	
2.0 Hdi 109		01->	2041,68	**C0243**	
2.0 Hdi 90		99->	2041,68	**C0243**	

REGGISPINTA DISTACCO FRIZIONE PER AUTO
CLUTCH RELEASE BEARING FOR CARS
BUTEE D'EMBRAYAGE POUR VOITURES

follows CITROËN

MODELLO	DIMENSIONI	ANNO	RIF ORIGINALE	RIF CORAM	NOTE
XSARA PICASSO					
1.6 (65kW)		06/00	2041,63	**C0243**	
1.6 (N68) - 1.8 16V (N68) - 2.0 Hdi (N68)		00->	2041,68	**C0243**	
1.6 Hdi		04->	2041,68	**C0243**	
2.0 HDI (66kW)		06/00	2041,63	**C0243**	
ZX					
1.1-1.4-1.6-1.7 Diesel		91->	96050128	**C0060**	
1.8-1.9-1.9 Diesel		92->	96050128	**C0060**	
2.0i		92->	96050128	**C0060**	
1.9 Turbo Diesel - 2.0i 16v		92->	205041	**C0160**	
BREAK 1.9 TD		94->	205099	**C0160**	
ZX (N2)					
1.6 i		91-97	9614677380	**C0066**	
ZX BREAK (N2)					
1.4 i		93-97	9614677380	**C0066**	

DACIA

DENEM					
1.300/1310		77-84	7700519170	**C0043**	
DUSTER					
4wd (20/26 Spline DPA)		84-93	7701348231	**C0043**	
SHIFTER					
1 Ton Pick-up		84-93	700519170	**C0043**	

REGGISPINTA DISTACCO FRIZIONE PER AUTO
CLUTCH RELEASE BEARING FOR CARS
BUTEE D'EMBRAYAGE POUR VOITURES

1

DAEWOO

MODELLO	DIMENSIONI	ANNO	RIF ORIGINALE	RIF CORAM	NOTE
ARANOS					
1.5 - 1.8 - 2.0		94->	96181631	**C0151**	
CIELO					
1.5 - 1.5 16v - 1.8		94->	96181631	**C0151**	
ESPERO					
1.5 - 1.8 - 2.0		94->	96181631	**C0151**	
LANOS					
1.4 - 1.5 - 1.6 16v		97->	96181631	**C0151**	
LEGANZA					
2.0 16v		97->	96181631	**C0151**	
KORANDO					
2.0-2.3-3.2 2.9 Diesel-2.9 Turbo Diesel-2.3 Diesel		96-> 96->	6612503015 6612503015	**C0092** **C0092**	
NEXIA					
1.5 - 1.5 16v - 1.8		94->	96181631	**C0151**	
NUBIRA					
1.6 - 2.0		97->	96181631	**C0151**	
MUSSO					
2.0-2.3-3.2 2.9 Diesel-2.9 Turbo Diesel-2.3 Diesel		93-> 93->	6612503015 6612503015	**C0092** **C0092**	
PRINCE SUPER SALOON					
1.8 2.0		93-94 93-94	90111364 90250658	**C0048** **C0050**	
RACER					
1.5 - 1.8		94->	96181631	**C0151**	
TICO					
0.8		95-00	09269-28004	**C0266**	

REGGISPINTA DISTACCO FRIZIONE PER AUTO
CLUTCH RELEASE BEARING FOR CARS
BUTEE D'EMBRAYAGE POUR VOITURES

MODELLO	DIMENSIONI	ANNO	RIF ORIGINALE	RIF CORAM	NOTE
DAIHATSU					
CHARMANT					
A10 10v 1.2		74-76	90363-38084DU	**C0235**	
A20 20v 1.4		74-77	90363-38009DU	**C0235**	
CONSORTE					
1.2 (EP42 - 47 - 51)		73-76	90363-38084DU	**C0235**	
CUORE III					
0.8		90-94	31230-87204	**C0264**	
CUORE IV					
0.8		95-96	31230-87204	**C0264**	
CUORE V					
0.8		96-98	31230-87204	**C0264**	
MOVE					
0.8		96->	31230-87204	**C0264**	
DELTA					
2000 750 1.2		->71	90363-38009DU	**C0235**	
DAIMLER					
SOVEREIGN SERIES 3					
4.2		79-83	90363-38009DU	**C0235**	
DODGE					
DODGE					
1.5-1.8 Brasil			71241715	**C0153**	

REGGISPINTA DISTACCO FRIZIONE PER AUTO
CLUTCH RELEASE BEARING FOR CARS
BUTEE D'EMBRAYAGE POUR VOITURES

1

FIAT

MODELLO	DIMENSIONI	ANNO	RIF ORIGINALE	RIF CORAM	NOTE
124					
BC sport 1.6		70-82	4316750	**C0014**	
Coup,-Spider-Special T-1.436		69-74	4207838	**C0013**	INTERCAMBIABILE
Coup,-Spider-Special T-1.436		69-74	4207838	**C0023**	INTERCAMBIABILE
Sport-Spider 1.8		72-75	4221417	**C0014**	
1.6-A-C		68-75	4207838	**C0013**	INTERCAMBIABILE
1.6-A-C		68-75	4207838	**C0023**	INTERCAMBIABILE
125					
125-S		69-72	4409889	**C0013**	INTERCAMBIABILE
125-S		69-72	4409889	**C0023**	INTERCAMBIABILE
126					
594cc		73-77	4304521	**C0004**	
652cc		77-80	4438567	**C0004**	
Bis (700cc Water Cooled)		88->	7683329	**C0004**	
127					
903cc-1049cc-1301cc		71-83	4439919	**C0009**	
1301cc diesel		81-83	4190622	**C0010**	
128					
1.100-1.300		69-80	5967728	**C0010**	
130					
Tutti i modelli\all models		69->		**C0254**	Rif. Valeo R052
131					
1.3-14 Mirafiori		80-84	4207838	**C0013**	INTERCAMBIABILE
1.3-14 Mirafiori		80-84	4207838	**C0023**	INTERCAMBIABILE
1.6 Mirafiori 4 speed		74-83	4207838	**C0013**	INTERCAMBIABILE
1.6 Mirafiori 4 speed		74-83	4207838	**C0023**	INTERCAMBIABILE
1.6 Mirafiori Speciale		75-77	4207838	**C0013**	INTERCAMBIABILE
1.6 Mirafiori Speciale		75-77	4207838	**C0023**	INTERCAMBIABILE
2.0/2.5 diesel		79-85	4207838	**C0013**	INTERCAMBIABILE
2.0/2.5 diesel		79-85	4207838	**C0023**	INTERCAMBIABILE
2.0 Racing Miriafiori		78-84	4207838	**C0013**	INTERCAMBIABILE
2.0 Racing Miriafiori		78-84	4207838	**C0023**	INTERCAMBIABILE
1.6		74-75	4221417	**C0014**	
1.6 5 speed		75-76	4221417	**C0014**	

REGGISPINTA DISTACCO FRIZIONE PER AUTO
CLUTCH RELEASE BEARING FOR CARS
BUTEE D'EMBRAYAGE POUR VOITURES

follows FIAT

MODELLO	DIMENSIONI	ANNO	RIF ORIGINALE	RIF CORAM	NOTE
132					
1.6		73-77	4207838	**C0013**	INTERCAMBIABILE
1.6		73-77	4207838	**C0023**	INTERCAMBIABILE
1.8-2.0		73-81	4316750	**C0014**	
2.0/2.5 Diesel		78-81	4409889	**C0013**	INTERCAMBIABILE
2.0/2.5 Diesel		78-81	4409889	**C0023**	INTERCAMBIABILE
500					
110 N-110 D		->65	4151164	**C0002**	
110 F-120 F-L-Bianchina		65-76	4333358	**C0003**	
1.1 Sporting		94-98	46466726	**C0099**	
600					
600-D		61-73	4336840	**C0005**	COMPLETO
600-D-T-4CV-614		61-73	4136712	**C0017**	SENZA MANICOTTO
1.1 (187axb) - (187axb1a)		98->	46466726	**C0099**	
VAN 1.1		98->	46466726	**C0099**	
600 S FENIX Argentina			97051536	**C0020**	
850					
Tutti i tipi/All types/tous types		65-73	4226671	**C0006**	
900					
T-E		65-73	4226671	**C0006**	
1.100/103					
		->69	832623	**C0007**	COMPLETO
1.300/1.500					
		65-68	4090586	**C0008**	COMPLETO
1.800/2.100/2.300					
		->69	816341	**C0007**	COMPLETO
ARGENTA					
1.6-2.0		81-85	4207838	**C0013**	INTERCAMBIABILE
1.6-2.0		81-85	4207838	**C0023**	INTERCAMBIABILE
2.0 Volumex-2.5 Diesel-2.5 td		81-85	4207838	**C0013**	INTERCAMBIABILE
2.0 Volumex-2.5 Diesel-2.5 td		81-85	4207838	**C0023**	INTERCAMBIABILE

REGGISPINTA DISTACCO FRIZIONE PER AUTO
CLUTCH RELEASE BEARING FOR CARS
BUTEE D'EMBRAYAGE POUR VOITURES

1

follows FIAT

MODELLO	DIMENSIONI	ANNO	RIF ORIGINALE	RIF CORAM	NOTE
BARCHETTA					
1.8 16v		95->	7628856	**C0024**	
BRAVA/BRAVO					
1.2 16v		98-00	7625958	**C0099**	
1.4 - '1.4 12v		95->	7625958	**C0099**	
1.4 12v (182.BA)		95-01	7681283	**C0011**	
1.6 16v		95->	7681283	**C0011**	
1.8 16v-1.9 Diesel		95->	7628856	**C0024**	
1.9 Turbo Diesel		95->	7628856	**C0024**	
1.9 Turbo Diesel (75 - 100) - D - JTD		10/96->	7681283	**C0011**	
2.0 20v		95->	7628856	**C0024**	
CAMPAGNOLA					
1.995 Petrol-2.445 Diesel		79	1391793	**C0014**	
CINQUECENTO					
700		92->	7683329	**C0004**	
900		92->	5991916	**C0027**	
Sporting 1.1		94->	7625958	**C0099**	
COUPE'					
1.8 16v - 2.0 16v		93->	7628856	**C0024**	
2.0 20v		96->	7628856	**C0024**	
2.0 20v Turbo		96->	60814442	**C0234**	
CROMA					
Tutti i modelli/All types/Tous types		85->	7681283	**C0011**	
DINO					
135 Coupè 2.4		72->		**C0254**	Rif. Valeo R052

REGGISPINTA DISTACCO FRIZIONE PER AUTO
CLUTCH RELEASE BEARING FOR CARS
BUTEE D'EMBRAYAGE POUR VOITURES

follows FIAT

MODELLO	DIMENSIONI	ANNO	RIF ORIGINALE	RIF CORAM	NOTE
DAILY					
Diesel ->28.8-32.8-35.8-40.8		78-90	93800287	**C0025**	
Petrol ->28.9-32.9-35-9-40.9		78->	93806822	**C0025**	
Turbo Diesel ->35.10-45.10-49.10		84->	93806822	**C0025**	
Turbo Diesel ->40.10A-40.10 4x4		87->	93800287	**C0025**	
Turbo Diesel -> 35.12			1905290	**C0026**	
Turbo Diesel -> 49.12 - 55.12 - 59.12			1904749	**C0026**	
DOBLO					
(223) 1.2 (223AXA 1A)		01->	7681283	**C0011**	
CARGO (223) 1.2 (223ZXA 1A)		01->	7681283	**C0011**	
DUCATO					
Van Diesel 1.9		87-94	7701348537	**C0045**	
Van 2.5 (CRD) Diesel		82-94	95492693	**C0045**	
Van 2.5 (Sofim) Diesel		83-94	95492693	**C0045**	
Van Petrol 1.8		82-94	95492693	**C0045**	
Van Petrol 2.0		82-94	95492693	**C0045**	
1.9-2.5-2.5 4x4 Turbo Diesel		87-94	95492693	**C0045**	
2.0		94->	96092637	**C0236**	
1.9 Diesel - 1.9 Turbo Diesel		94->	95656587	**C0236**	
2.5 Diesel - 2.8 Diesel		94->	96092637	**C0236**	
Autobus (230) 2.5 D - 2.5 TDI		94-02	9625260580	**C0251**	COMBINATO - PANORAMA
Autobus (230) 2.5 TDI 4x4		97-02	9625260580	**C0251**	
Autobus (230) 2.8 D		98-02	9625260580	**C0251**	
Autobus (244-Z_) 2.0 JTD		02->	9633922480	**C0243**	
Furgonato (244) 2.0 JTD		02->	9633922480	**C0243**	
Furgonato (230L) 2.5 D - TDI - Maxi		94-02	9625260580	**C0251**	
Furgonato (230L) 2.5 TDI 4x4 - 2.8 D		98-02	9625260580	**C0251**	
Pianale piatto/Autotelaio (230) 2.5 D -TDI		94-02	9625260580	**C0251**	
Pianale piatto/Autotelaio (230) 2.5 D 4x4		94-02	9625260580	**C0251**	
Pianale piatto/Autotelaio (230) 2.5 TDI 4x4		98-02	9625260580	**C0251**	
Pianale piatto/Autotelaio (230) 2.8 D		98-02	9625260580	**C0251**	
DUNA					
Tutti i tipi/All types/Tous types		87-93	4409361	**C0010**	VECCHIO MODELLO
Tutti i tipi/All types/Tous types		87-93	7681283	**C0011**	NUOVO MODELLO
ELBA					
1.3 - 1.5 - 1.6 - 1.7 D		86-96	7681283	**C0011**	

REGGISPINTA DISTACCO FRIZIONE PER AUTO
CLUTCH RELEASE BEARING FOR CARS
BUTEE D'EMBRAYAGE POUR VOITURES

1

follows FIAT

MODELLO	DIMENSIONI	ANNO	RIF ORIGINALE	RIF CORAM	NOTE
FIORINO					
900-1.050-1.300		78->	4439919	**C0009**	VECCHIO MODELLO
900-1.050-1.300		78->	5991916	**C0027**	NUOVO MODELLO
1.050 - 1.000 - FURGONATO		80-87	4409361	**C0011**	
1.100 - FURGONATO		86-88	4409361	**C0011**	
1.300 - FURGONATO		87-93	4409361	**C0011**	
1.300 D - FURGONATO		82-87	4409361	**C0011**	
1.500 - FURGONATO		88-93	4409361	**C0011**	
1.700 D - FURGONATO		87-90	4409361	**C0011**	
1.049cc		80-88	4409361	**C0011**	
Petrol 1.100-1.300		88-90	4409361	**C0011**	
Diesel 1.700		89->	4409361	**C0011**	
FIORINO PICK UP					
(146) 1.4		98-98	4409361	**C0011**	
(146) 1.6		94-96	4409361	**C0011**	
(146) 1.7 D		88-97	4409361	**C0011**	
(146) 1.7 TD		97-98	4409361	**C0011**	
(147) 1.1		82-87	4409361	**C0011**	
(147) 1.3 D		84-88	4409361	**C0011**	
IDEA					
1.3 JTD		04->	4409361	**C0011**	
1.4		04->	46466726	**C0099**	
MAREA / MAREA WEEKEND					
1.2 16v		98->	7625958	**C0099**	
1.4 12v		96->	7625958	**C0099**	
1.6 16v		96->	4409362	**C0011**	
1.8 16v		96->	7628856	**C0024**	
1.9 TDi (75-100)		96->	7628856	**C0024**	
1.9 JTD 105		99-01	4409362	**C0011**	
2.0 20v		96->	7628856	**C0024**	
2.4 JTD 130		96->	60814442	**C0234**	
MULTIPLA					
1.6 16v		96->	7681283	**C0011**	
1.6 16v Bipower-1.6 16v Blupower -1.9 JTD		99->	7681283	**C0011**	

REGGISPINTA DISTACCO FRIZIONE PER AUTO
CLUTCH RELEASE BEARING FOR CARS
BUTEE D'EMBRAYAGE POUR VOITURES

follows FIAT

MODELLO	DIMENSIONI	ANNO	RIF ORIGINALE	RIF CORAM	NOTE
PALIO / PALIO WEEKEND					
1.2		96-99	46539189	**C0011**	
1.2 (EUROPA)		99->	46466726	**C0099**	
1.2 (178BX)		98->	46466726	**C0099**	
1.2 (178DX) - (178DX.G1A)		96-01	46466726	**C0099**	SW
Tutti i tipi/All types/Tous types		96->	46539189	**C0011**	
Tutti i tipi/All types/Tous types (EXTRA EUROPA)		99->	46466726	**C0099**	
PANDA					
30		80-86	7683329	**C0004**	
45-45S		80-86	4439919	**C0009**	
750-1.000-1.1 Selecta-1.3 Diesel		86->	5991916	**C0027**	
1100		95-00	46466726	**C0099**	
1.1 - 1.2		03->	46466726	**C0099**	
1.0 4x4		83-86	5991916	**C0027**	
1.0 4x4		86-91	5991916	**C0027**	
PUNTO					
1.1-1.2-1.6-1.7 Diesel		93->	7625958	**C0099**	
1.1-1.2 (176)		94-99	7625958	**C0099**	
1.2 16V (176)		97-99	7625958	**C0099**	
1.2 16V (188)		99->	7625958	**C0099**	
1.4 GT Turbo		93-94	7628856	**C0024**	
1.4 G.T Turbo		94-96	7625958	**C0099**	
1.6 - 1.7 D		94-97	7625958	**C0099**	
1.7 Turbo Diesel		93->	7681283	**C0011**	
1.9 Diesel		99->	7628856	**C0024**	
1.9 JTD		99->	7681283	**C0011**	
Cabriolet 1.2		94-00	7625958	**C0099**	
Cabriolet 1.2 16V		97-00	7625958	**C0099**	
Cabriolet 1.6		94-97	7625958	**C0099**	
PUNTO/VAN					
1.1 - 1.7 Diesel		96-00	7625958	**C0099**	
1.7 Turbo Diesel		96->	7681283	**C0011**	
REGATA / REGATA WEEKEND					
1.3-1.5-1.6		84->	4409361	**C0010**	VECCHIO MODELLO
1.3-1.5 S-1.6-1.7 D-1.9 D-1.9 TD		84->	7681283	**C0011**	NUOVO MODELLO
1.6 100-1.6 100 Super-1.6 100 Estate		84-90	7540733	**C0022**	
1.6 (1.585cc)		87-90	7628856	**C0024**	
1.7 Diesel -1.9 Diesel -1.9 td		84-90	7681283	**C0011**	
1.9 Turbo diesel		87-90	7628856	**C0024**	

REGGISPINTA DISTACCO FRIZIONE PER AUTO
CLUTCH RELEASE BEARING FOR CARS
BUTEE D'EMBRAYAGE POUR VOITURES

1

follows FIAT

MODELLO	DIMENSIONI	ANNO	RIF ORIGINALE	RIF CORAM	NOTE
RITMO					
1.1		82-88	7681283	**C0011**	
1.3		79-84	5967728	**C0010**	
1.3		78-88	7681283	**C0011**	
1.5		81-82	5967728	**C0010**	
1.5		83-88	7681283	**C0011**	
1.6		81-85	7681283	**C0011**	
2.0		84-87	7681283	**C0011**	
1.6 100S		85-88	7540733	**C0022**	
Turbo diesel		->87	7628856	**C0024**	
SIENA					
1.2		98->	46466726	**C0099**	
1.4 CAT.		96->	46466726	**C0099**	
1.6 16v		98->	7681283	**C0011**	
SCUDO					
1.6 Petrol-1.9 Diesel		94->	9609088280	**C0060**	
1.9 Turbo Diesel		95->	96092637	**C0236**	
2.0 JTD		99->	9619888580	**C0237**	
Combinato (220P) 1.9 D		98->	9614677380	**C0066**	SW
Combinato (220P) 2.0 16v		00->	9633922480	**C0243**	
Furgonato (220L) 1.9 D		98->	9614677380	**C0066**	SW
SEICENTO					
899 cc		98->	7662270	**C0027**	
1.1		98->	46466726	**C0099**	
SPIDER EUROPA					
2.0 Volumex		84->	4207838	**C0013**	
2.0 IE		82->	4207838	**C0013**	
STILO					
(192) 1.9 JTD (192_XF1A)		02->	7681283	**C0011**	
STRADA PICK UP					
1.2 - 1.7 TD		99->	7681283	**C0011**	
STRADA (see RITMO)					

REGGISPINTA DISTACCO FRIZIONE PER AUTO
CLUTCH RELEASE BEARING FOR CARS
BUTEE D'EMBRAYAGE POUR VOITURES

follows FIAT

MODELLO	DIMENSIONI	ANNO	RIF ORIGINALE	RIF CORAM	NOTE
TALENTO					
1.9 Diesel		88->	95492693	**C0045**	
2.0		89->	95492693	**C0045**	
TEMPRA					
1.4-1.6		90->	7681283	**C0011**	
1.8		90-92	7628856	**C0024**	
1.9 Diesel		90->	7681283	**C0011**	
1.9 Turbo Diesel		90->	7628856	**C0024**	
2.0 i.e SX		92->	7628856	**C0024**	
2.0 i.e SX, 4x4		93->	7681283	**C0011**	
TEMPRA SW					
1.4 i.e. - 1.6 - 1.6 i.e. - 1.9 D - 2.0 i.e. 4x4		90-96	7681283	**C0011**	
TIPO					
1.1-1.3-1.4-1.6 (i.e.) 1.9 D		88-95	7681283	**C0011**	
1.6 Twin cam		88-95	7628856	**C0024**	
1.7 Diesel		88-95	7681283	**C0011**	
1.8-1.8 16v		90-95	7628856	**C0024**	
2.0 8v-2.0 16v		93-95	7628856	**C0024**	
1.9 Turbo Diesel		88-95	7628856	**C0024**	
ULYSSE					
1.8 i.e		97->	9617860880	**C0060**	
1.9 Turbo Diesel		94->	96092637	**C0236**	
2.0 i.e		94->	96090882	**C0060**	
2.0 i.e 16V		94->	95656587	**C0236**	
2.0 i.e Turbo		94-96	96092637	**C0236**	
2.0 Turbo Diesel		98->	9619888580	**C0237**	
2.1 Turbo Diesel		96->	9609263780	**C0236**	
(179AX) 2.0		02->	9633922480	**C0243**	
(220) 1.8 (220.BB5)		97-02	9614677380	**C0066**	
(220) 2.0 (220.AC5)		94-02	9614677380	**C0066**	
(220) 2.0 16V		98-00	9614677380	**C0066**	
(220) 2.0 16V		00-02	9633922480	**C0243**	

REGGISPINTA DISTACCO FRIZIONE PER AUTO
CLUTCH RELEASE BEARING FOR CARS
BUTEE D'EMBRAYAGE POUR VOITURES

1

follows FIAT

MODELLO	DIMENSIONI	ANNO	RIF ORIGINALE	RIF CORAM	NOTE
UNO					
1.0 (903cc)-1.0 (999cc)		83-92	4439919	**C0009**	
1.0 (999cc)		93-95	7625958	**C0099**	
1.1 (1116cc)		83-89	4439919	**C0009**	
1.1 (1108cc)		89-92	5991916	**C0027**	
1.1 (1108cc) C513 Gearbox		89-92	7681283	**C0011**	
1.1 (1108cc)		92-94	7625958	**C0099**	
1.3 (1301cc)		83-90	4439919	**C0009**	
1.3 Turbo -T.i.e.		85-90	7681283	**C0011**	
1.3 Diesel		83-90	5991916	**C0027**	
1.3 Turbo Diesel		83-90	7681283	**C0011**	
1.4 (1372cc)		90-94	7681283	**C0011**	
1.4 i Turbo		90-94	7628856	**C0024**	
1.7 Diesel-1.9 Diesel		87-97	7681283	**C0011**	
1.1 Citivan		88-94	5991916	**C0027**	
1.7 Citivan		88-96	7681283	**C0011**	
1.5 75 i.e.		85-93	7681283	**C0011**	
1.0 (45 HP i.e.) - '1.9 D		89-94	7681283	**C0011**	
UNO BRASIL					
1050-1300			5933505	**C0010**	
X 1/9 CABRIOLET					
1.3		74-78	7681283	**C0011**	
1.3 EXCLUSIV SERIE		73-79	7681283	**C0011**	
1.5 FIVE SPEED		78-89	7681283	**C0011**	

REGGISPINTA DISTACCO FRIZIONE PER AUTO
CLUTCH RELEASE BEARING FOR CARS
BUTEE D'EMBRAYAGE POUR VOITURES

FORD

MODELLO	DIMENSIONI	ANNO	RIF ORIGINALE	RIF CORAM	NOTE
A SERIES					
2.0 V4 - 3.0 V6		73-83	70VB7548CC	**C0108**	
2.4 Diesel - 3.5 Diesel		73-83	70VB7548CC	**C0108**	
CAPRI MK1					
1.3 20 Splines		72-74	6124271	**C0104**	
1.3 23 Splines-1.6 GT 20/23 Splines		72-74	6124270	**C0074**	
1.6 OHC 20 Splines		72-73	6124271	**C0104**	
1.6 GT 23 Splines		72-73	6124270	**C0074**	
3.0 V6		71-73	6124270	**C0074**	
CAPRI MK2/3					
1.6 OHC 20 Splines		74-83	6124271	**C0104**	
1.3-1.6 GT-1.6 23 Splines		74-89	6124270	**C0074**	
2.0-2.8 V6-3.0 V6		74-86	6124270	**C0074**	
CAPRI (GERMANY)					
2.3		71-84	6124270	**C0074**	
2.6		70-74	6124270	**C0074**	
CAPRI (USA)					
2.0 Sport Coupé		70->	6124270	**C0074**	
CONSUL					
2.0-2.5-3.0		71-75	6124270	**C0074**	
CONSUL / GRANADA (GERMANY)					
Tutti i tipi/All types/Tous types		72-85	6124270	**C0074**	
CORTINA MK3					
1.6 OHC 20 Splines		73-76	6124271	**C0104**	
1.3-1.6 GT-1.6-2.0 - 2.0 GT		70-76	6124270	**C0074**	
CORTINA MK4					
1.6 OHC 20 Splines		76-83	6124271	**C0104**	
1.3-1.6 GT-1.6-2.0-2.3 V6		76-83	6124270	**C0074**	

REGGISPINTA DISTACCO FRIZIONE PER AUTO
CLUTCH RELEASE BEARING FOR CARS
BUTEE D'EMBRAYAGE POUR VOITURES

1

follows FORD

MODELLO	DIMENSIONI	ANNO	RIF ORIGINALE	RIF CORAM	NOTE
COURIER VAN					
1.3		91->	6042593	**C0071**	
1.8 Diesel		91->	6042593	**C0071**	
ESCORT MK1					
RS2000		73-75	6124270	**C0074**	
ESCORT MK2					
900-1.1-1.3-1.6		75-80	75AB7548AA	**C0073**	
Mexico - RS1800 - RS2000		75->	6124270	**C0074**	
ESCORT MK3/4					
Tutti i tipi/All types/Tous types		80-90	6042593	**C0071**	
ESCORT '90					
1.1-1.3-1.4-1.6-1.8 16v		90-95	77FB7548CA	**C0071**	
1.8 Diesel		90-95	77FB7548CA	**C0071**	
1.8 16v (130 Ps eng.)		93-95	7166796	**C0072**	
RS2000 16v- RS2000 4x4		91-95	7166796	**C0072**	
1.8 Turbo Diesel		93-95	7166796	**C0072**	
2.0 RS Cosworth		92-95	6164967	**C0230**	
ESCORT '95					
1.3-1.4-1.6-1.8		2/95-7/95	6042593	**C0071**	
1.8 Diesel		2/95-5/95	6042593	**C0071**	
1.3-1.4-1.6-1.6 4x4-1.8		95->	7166796	**C0072**	
1.8 Diesel - 1.8 Turbo Diesel		95->	7166796	**C0072**	
2.0 RS 2000		95->	7166796	**C0072**	
2.0 RS Cosworth		95->	6164967	**C0230**	
FALCON					
2.3 L			74BR7548E	**C0154**	
Argentina			76DR7548AA	**C0156**	
FALCON USA					
Tutti i tipi/All types/Tous types			76DR7548AA	**C0156**	

REGGISPINTA DISTACCO FRIZIONE PER AUTO
CLUTCH RELEASE BEARING FOR CARS
BUTEE D'EMBRAYAGE POUR VOITURES

follows FORD

MODELLO	DIMENSIONI	ANNO	RIF ORIGINALE	RIF CORAM	NOTE
FIESTA/FIESTA VAN					
1.0-1.1		77-88	6042593	**C0071**	
1.3		77-86	6042593	**C0071**	
1.4		77-89	6042593	**C0071**	
1.6 Diesel		84-88	6042593	**C0071**	
XR2		82-88	6042593	**C0071**	
FIESTA '89					
1.0-1.1		89-95	6042593	**C0071**	
1.1 Classic - 1.3 Classic		95-96	7166796	**C0072**	
1.3		89-95	6042593	**C0071**	
1.4 - 1.6 - 1.6 XR2 - 1.8 16v		89-95	6042593	**C0071**	
1.8 16v (130 PS)		92-95	7166796	**C0072**	
1.8 Diesel		89-95	6042593	**C0071**	
1.8 XR2 16v - RS Turbo		89-94	6042593	**C0071**	
1.8 Turbo Diesel		91-96	7166796	**C0072**	
FOCUS					
GALAXY					
1.9 TDi-2.0-28 V6		95->			
GRANADA					
1.8		85-92	6124270	**C0074**	
2.0 - 2.0i		85-89	6124270	**C0074**	
2.0 MT75 - 2.4i MT75		89-94	6164967	**C0230**	
2.4 i		86-89	6124270	**C0074**	
2.5 Diesel		85-88	6124270	**C0074**	
2.5 Turbo Diesel MT75		93-94	6164967	**C0230**	
2.8i - 2.8i 4x4		85-87	6124270	**C0074**	
2.9i - 2.9i 4x4		87-88	6124270	**C0074**	
2.9i MT75 - 2.9i 4x4 MT75		88-94	6164967	**C0230**	
LIGHT COMMERCIAL					
			75BB7548AA	**C0074**	
MAVERICK (UDS, UNS)					
2.4 i		93-98	30502-0F500	**C0257**	
2.4 i (UDS)		96-98	30502-0F500	**C0257**	

REGGISPINTA DISTACCO FRIZIONE PER AUTO
CLUTCH RELEASE BEARING FOR CARS
BUTEE D'EMBRAYAGE POUR VOITURES

1

follows FORD

MODELLO	DIMENSIONI	ANNO	RIF ORIGINALE	RIF CORAM	NOTE
MONDEO					
1.8 Turbo Diesel		9/93	7166796	**C0072**	
1.6i-1.8i-2.0i (16v)		93-94	6928450	**C0239**	
ORION					
1.3-1.4		84-90	6042593	**C0071**	
1.6-1.6i		84-90	6042593	**C0071**	
1.6 Diesel-1.8 Diesel		83-90	6042593	**C0071**	
1.3-1.4-1.6		90-93	6042593	**C0071**	
1.6 - 1.8		92-93	6042593	**C0071**	
1.8 Diesel		90-95	6042593	**C0071**	
91 1.8 16V-1.8 Turbo Diesel		92->	7166796	**C0072**	
P100 PICK UP					
1.6		82-89	6124270	**C0074**	
1.8 Turbo Diesel		89-94	6124270	**C0074**	
2.0		87-89	6124270	**C0074**	
2.0 Petrol		89-94	6164967	**C0230**	
PICK UP U.S.A				**C0157**	
PROBE					
2.0 16v		94->	3252695	**C0226**	
2.2		88-92	3256394	**C0226**	
2.5 24v		94->	3256394	**C0226**	
Turbo (USA models)		88->	3252695	**C0226**	
SAPPHIRE					
1.6 4 Speed 20 Splines		82-89	6124271	**C0104**	
1.6 - 1.8		82-93	6124270	**C0074**	
2.0 - 2.3 Diesel - RS Cosworth		82-93	6124270	**C0074**	
SCORPIO					
1.8		85-92	6124270	**C0074**	
2.0-2.0i		85-89	6124270	**C0074**	
2.5 Diesel		85-88	6124270	**C0074**	
2.8-2.9		87-88	6124270	**C0074**	
1.8i-2.0i		9/81->	6164967	**C0230**	
2.4i-2.9i		89->	6164967	**C0230**	
2.5 Turbo Diesel		92-93	6164967	**C0230**	
2.9 V6		94->	6164967	**C0230**	

REGGISPINTA DISTACCO FRIZIONE PER AUTO
CLUTCH RELEASE BEARING FOR CARS
BUTEE D'EMBRAYAGE POUR VOITURES

follows FORD

MODELLO	DIMENSIONI	ANNO	RIF ORIGINALE	RIF CORAM	NOTE
SIERRA					
1.3		82-87	75AB7548AA	**C0073**	
1.4		88-92	6124270	**C0074**	
1.6 4 Speed 20 Splines		82-89	6124271	**C0104**	
1.6 4/5 Speed-1.6i-1.8		82-93	6124270	**C0074**	
1.8i-1.8 TD		88-93	6124270	**C0074**	
2.0		82-93	6124270	**C0074**	
2.3 Diesel-2.3 Petrol-2.8i-2.9i		82-93	6124270	**C0074**	
2.0 DOHC MT75		89-93	6164967	**C0230**	
RS Cosworth-RS Cosworth 4x4		90-93	6164967	**C0230**	
XR 4x4 2.8-XR 4i		85-88	6124270	**C0074**	
TAUNUS					
1.3		70-82	75AB7548AA	**C0073**	
1.6		70-82	75BB7548BA	**C0104**	
Argentina			80BR7548A	**C0154**	
TAUNUS (GERMANY)					
1.3		70-82	75AB7548AA	**C0073**	
1.6 GT		70-82	6124270	**C0074**	
1.6 20 Splines		70-82	75BB7548BA	**C0104**	
1.6 23 Splines - 2.0 - 2.3 V6		70-82	6124270	**C0074**	
TRANSIT					
1.6		75-78	6093444	**C0108**	FACCIATA PIANA
1.6		75-78	6093444	**C0109**	FACCIATA BOMBATA
1.6 Petrol cambio F		1/78->	6124270	**C0074**	
1.6 Petrol cambio J		78-88	70VB7548CC	**C0108**	FACCIATA PIANA
1.6 Petrol cambio J		78-88	70VB7548CC	**C0109**	FACCIATA BOMBATA
1.6 Petrol		86-88	6124270	**C0074**	
1.6 Petrol Heavy Duty		86-88	6093444	**C0108**	FACCIATA PIANA
1.6 Petrol Heavy Duty		86-88	6093444	**C0109**	FACCIATA BOMBATA
1.6 Petrol		88.94	6164967	**C0230**	
2.0 Petrol		78-88	70VB7548CC	**C0108**	FACCIATA PIANA
2.0 Petrol		78-88	70VB7548CC	**C0109**	FACCIATA BOMBATA
2.0 Petrol		86-88	70VB7548CC	**C0108**	FACCIATA PIANA
2.0 Petrol		86-88	70VB7548CC	**C0109**	FACCIATA BOMBATA
2.0 Petrol		88-94	6164967	**C0230**	
2.4 Diesel		71-84	6093444	**C0108**	FACCIATA PIANA
2.4 Diesel		71-84	6093444	**C0109**	FACCIATA BOMBATA
2.5 Diesel		84-88	1513917	**C0108**	FACCIATA PIANA
2.5 Diesel		84-88	1513917	**C0109**	FACCIATA BOMBATA
2.0 Petrol-2.5 Diesel-2.5 TD		88->	6164967	**C0230**	
2.9		88-94	6093444	**C0108**	FACCIATA PIANA
2.9		88-94	6093444	**C0109**	FACCIATA BOMBATA
3.0 Petrol		86-88	6093444	**C0108**	FACCIATA PIANA
3.0 Petrol		86-88	6093444	**C0109**	FACCIATA BOMBATA
TRANSIT VI					
2.4 Turbo Diesel		06/00	4056754	**C0244**	
TRANSIT 95 / TOURNEO					
2.0i 8v - 2.5 Diesel - 2.5 Turbo Diesel		8/94->	6164967	**C0230**	

REGGISPINTA DISTACCO FRIZIONE PER AUTO
CLUTCH RELEASE BEARING FOR CARS
BUTEE D'EMBRAYAGE POUR VOITURES

1

FSO

MODELLO	DIMENSIONI	ANNO	RIF ORIGINALE	RIF CORAM	NOTE
125P					
		75->	4237218	**C0013**	
CARO					
1.9 Diesel		93->	9617860880	**C0060**	
PICK UP					
1.5		85-90	4237218	**C0013**	
POLONEZ					
1.4 16v		93->	9617860880	**C0060**	
1.5		78->	4237218	**C0013**	
1.6		87->	21011601180	**C0028**	
1.9 Diesel		91->	2041,29	**C0059**	

HILLMAN

PEYKAN HUNTER					
DL-SUPER GL		66-76	1801819	**C0190**	
GT-GLS		72-76	1801819	**C0190**	
PEYKAN					
1.6 405 RD Mot. PEUGEOT VALEO		99->	BB 12620 S02	**C0191**	VERSIONE

REGGISPINTA DISTACCO FRIZIONE PER AUTO
CLUTCH RELEASE BEARING FOR CARS
BUTEE D'EMBRAYAGE POUR VOITURES

HONDA

MODELLO	DIMENSIONI	ANNO	RIF ORIGINALE	RIF CORAM	NOTE
ACCORD					
2.0 Turbo Diesel		96->	GRB 243	**C0208**	
BALLADE					
1.3-1.4		84-86	22810PE6003	**C0209**	
1.5		84-86	22810PE6003	**C0209**	
1.5 EX-1.5 EXi		86-89	22810PE6003	**C0209**	
CIVIC					
1.3 DL		84-87	22810PE6003	**C0209**	
1.5 DL 12V-1.5 GTI		85-87	22810PE6003	**C0209**	
1.5 SHUTTLE		83-87	22810PE6003	**C0209**	
COUPE CRX					
1.5 12V		84-86	22810PE6003	**C0209**	
INTEGRA					
1.5 DL-LX		86-89	22810PE6003	**C0209**	
JAZZ/CITY					
1.2		84-86	22810PE6003	**C0209**	
LEGEND					
2.0 'O' Series		85->	GRB 243	**C0208**	

REGGISPINTA DISTACCO FRIZIONE PER AUTO
CLUTCH RELEASE BEARING FOR CARS
BUTEE D'EMBRAYAGE POUR VOITURES

1

HYUNDAI

MODELLO	DIMENSIONI	ANNO	RIF ORIGINALE	RIF CORAM	NOTE
LANTRA / ELANTRA I					
1.5i		90-95	41421-21300	**C0215**	
1.6i 16v		90-93	41421-21000	**C0215**	
PONY / EXCEL					
1.2 - 1.4		78-79	09269-38002	**C0235**	
1.3 - 1.5		86-91	41421-26000	**C0215**	
1.3 - 1.5		89-95	41421-21400	**C0215**	
1.5i		89-95	42421-21000	**C0215**	
S COUPE					
1.5		90-92	41421-26000	**C0215**	
1.5i		90-95	41421-21400	**C0215**	
1.5 GT Turbo		92-95	41421-21400	**C0215**	
SONATA					
1.8i - 2.0i		88-93	42421-21000	**C0215**	
2.0i 16v		91-93	41421-26000	**C0215**	
2.4i		88-91	41421-21400	**C0215**	
STAREX H-1					
2.5 D		97->	42421-21000	**C0215**	

REGGISPINTA DISTACCO FRIZIONE PER AUTO
CLUTCH RELEASE BEARING FOR CARS
BUTEE D'EMBRAYAGE POUR VOITURES

INNOCENTI

MODELLO	DIMENSIONI	ANNO	RIF ORIGINALE	RIF CORAM	NOTE
90					
		74-85	GRB201	**C0085**	
120					
		74-82	GRB201	**C0085**	
ELBA					
1.3-1.5		90->	7681283	**C0011**	
1.4-1.6		93->	7681283	**C0011**	
1.7 Diesel		90->	7681283	**C0011**	
MINI					
1.000-1.001		74-76	GRB201	**C0085**	
COUPER 1.3		63-75	GRB201	**C0085**	
MINOR		69-76	GRB201	**C0085**	
T		69-75	GRB201	**C0085**	
DE TOMMASO		75-83	GRB201	**C0085**	
MILLE					
1.0-1.4 (CLIP)		94->	7681283	**C0011**	
1.7 Diesel (CLIP)		96->	7681283	**C0011**	
REGENT					
1.3		74-77	GRB201	**C0085**	

ISUZU

CAMPO / PICK UP					
2.2 Diesel - 2.2 Diesel 4x4		88->	09269-38002	**C0235**	
2.5 Diesel - 2.5 Diesel 4x4		89-92	09269-38002	**C0235**	
FARGO					
1.8		83-85	09269-38002	**C0235**	
2.0		85-88	09269-38002	**C0235**	
2.2		83-85	09269-38002	**C0235**	
2.2 Diesel		83-88	09269-38002	**C0235**	

REGGISPINTA DISTACCO FRIZIONE PER AUTO
CLUTCH RELEASE BEARING FOR CARS
BUTEE D'EMBRAYAGE POUR VOITURES

1

follows ISUZU

MODELLO	DIMENSIONI	ANNO	RIF ORIGINALE	RIF CORAM	NOTE
KB PICK UP					
1.6		80-88	09269-38002	**C0235**	
1.6 4x4		82-88	09269-38002	**C0235**	
2.0 Diesel		81-88	09269-38002	**C0235**	
2.0 4x4 Diesel		82-88	09269-38002	**C0235**	
2.2 Diesel - 2.2 4x4 Diesel		83-88	09269-38002	**C0235**	
MIDI					
2.0		88->	09269-38002	**C0235**	
2.2 Diesel		88->	09269-38002	**C0235**	
PIAZZA					
2.0		82-88	09269-38002	**C0235**	
TROOPER					
2.0		83-85	09269-38002	**C0235**	
2.2 Diesel		83-87	09269-38002	**C0235**	
2.2 Diesel		87	09269-38002	**C0235**	
2.2 Diesel		88-89	09269-38002	**C0235**	
2.2 Turbo Diesel		84-89	09269-38002	**C0235**	
2.3		85-89	09269-38002	**C0235**	
2.3 Turbo Diesel		87-88	09269-38002	**C0235**	

JAGUAR

XJ6					
2.9		86-90	GRP207	**C0235**	
3.4		75-86	GRP207	**C0235**	
3.6		86-89	GRP207	**C0235**	
4.2 5 Speed		78-86	GRP207	**C0235**	
XJ-S					
3.6		84-91	GRP207	**C0235**	
SOVEREING					
2.9		86-90	GRP207	**C0235**	
3.6		86-89	GRP207	**C0235**	

REGGISPINTA DISTACCO FRIZIONE PER AUTO
CLUTCH RELEASE BEARING FOR CARS
BUTEE D'EMBRAYAGE POUR VOITURES

KIA

MODELLO	DIMENSIONI	ANNO	RIF ORIGINALE	RIF CORAM	NOTE
AVELLA					
1.3		94->	0K201-16-510	**C0224**	
BESTA					
2.2 Diesel		92-93	K9A2-16-510	**C0226**	
CLARUS / CREDOS					
1.8i - 2.0i		96->	K9A2-16-510	**C0226**	
MENTOR					
1.5i - 1.6i		94->	0K203-16-510	**C0224**	
PREGIO					
2.7 D		97->	K9A2-16-510	**C0226**	
PRIDE					
1.1 L - 1.3 16v		91->	0K203-16-510	**C0224**	
ROCSTA					
1.8 - 2.2 Diesel		91->	0SR02-15-510	**C0226**	
SEPHIA					
1.6i		93->	0K203-16-510	**C0224**	
SPORTAGE					
2.0 - 2.0i 16v 4x4 - 2.2		7/95	0SR02-15-510	**C0226**	

REGGISPINTA DISTACCO FRIZIONE PER AUTO
CLUTCH RELEASE BEARING FOR CARS
BUTEE D'EMBRAYAGE POUR VOITURES

1

LADA

MODELLO	DIMENSIONI	ANNO	RIF ORIGINALE	RIF CORAM	NOTE
1.2/1.3/1.5/1.6					
1.2-1.3-1.5.1.6		74->	21011601180	**C0028**	COMPLETO
1.2-1.3-1.5-1.6		74->	21011601182	**C0021**	SENZA MANICOTTO
1.2MD-1.3		72->	3151823001 SACHS		**C0128**
1.5-1.6-1.6 LS		74->	27916220 VALEO	**C0128**	
FORMA					
1.1 (h.17)		90->	21081601180	**C0029**	FACCIATA PIANA
1.3 (h.17)		87->	21081601180	**C0029**	FACCIATA PIANA
1.5 (h.17)		88->	21081601180	**C0029**	FACCIATA PIANA
1.1 (h.20)		93->	21101601180	**C0129**	FACCIATA BOMBATA
1.3 (h.20)		93->	21101601180	**C0129**	FACCIATA BOMBATA
1.5 (h.20)		93->	21101601180	**C0129**	FACCIATA BOMBATA
1.1 (h.13)		93->	21081601180	**C0238**	FACCIATA BOMBATA
1.3 (h.13)		93->	21081601180	**C0238**	FACCIATA BOMBATA
1.5 (h.13)		93->	21081601180	**C0238**	FACCIATA BOMBATA
NIVA					
4x4		78->	21011601180	**C0028**	COMPLETO
4x4		78->	21011601182	**C0021**	SENZA MANICOTTO
1.3 S		81->	500031930	**C0128**	
Z1		76->	3151823001	**C0128**	
5000		79->	27916220	**C0128**	
1.6 (h.17)			21081601180	**C0029**	FACCIATA PIANA
1.6 (h.20)			21101601180	**C0129**	FACCIATA BOMBATA
1.6 (h.13)			21081601180	**C0238**	FACCIATA BOMBATA
OKA					
VAZ 1111			1110-1601180	**C0246**	
RIVA					
1.2 - 1.3 -1.5		74->	21011601180	**C0028**	
TAIGA					
1.6		76->	21011601180	**C0028**	
1.7i		93->	21011601180	**C0028**	
SAGONA					
Tutti i tipi\All types\Tous types (h.17)			21081601180	**C0029**	FACCIATA PIANA
Tutti i tipi\All types\Tous types (h.20)			21101601180	**C0129**	FACCIATA BOMBATA
Tutti i tipi\All types\Tous types (h.13)			21081601180	**C0238**	FACCIATA BOMBATA

REGGISPINTA DISTACCO FRIZIONE PER AUTO
CLUTCH RELEASE BEARING FOR CARS
BUTEE D'EMBRAYAGE POUR VOITURES

follows LADA

MODELLO	DIMENSIONI	ANNO	RIF ORIGINALE	RIF CORAM	NOTE
SAMARA					
1.1 (h.17)		90->	21081601180	**C0029**	FACCIATA PIANA
1.3 (h.17)		87->	21081601180	**C0029**	FACCIATA PIANA
1.5 (h.17)		88->	21081601180	**C0029**	FACCIATA PIANA
1.1 (h.20)		93->	21101601180	**C0129**	FACCIATA BOMBATA
1.3 (h.20)		93->	21101601180	**C0129**	FACCIATA BOMBATA
1.5 (h.20)		93->	21101601180	**C0129**	FACCIATA BOMBATA
1.1 (h.13)		93->	21101601180	**C0238**	FACCIATA BOMBATA
1.3 (h.13)		93->	21101601180	**C0238**	FACCIATA BOMBATA
1.5 (h.13)		93->	21101601180	**C0238**	FACCIATA BOMBATA
VAZ					
1.2 - 1.3 - 1.5 - 1.6			21011601180	**C0028**	
ZHIGULI					
3102		74-77	21011601180	**C0028**	
2101		74-77	21011601180	**C0028**	

LANCIA

2000					
Coupe		83-84	82314496	**C0030**	
HPE		83-84	82314496	**C0030**	
A112					
Tutti i tipi\All types\Tous types		69->	4192150	**C0009**	
BETA					
1.3-1.4-1.6-1.8		72-80	82314496	**C0030**	
1.6 HP-1.6 HPE-1.8 HPE-2.0 HF		75-84	82314496	**C0030**	
Monte Carlo		77-81	82314496	**C0030**	
2.0-2.0i.e		73-85	82323218	**C0032**	
2.0 Volumex		82-85	82314496	**C0030**	
2.0 Coupe Volumex-2.0 HPE Volumex		83-84	5950714	**C0022**	

REGGISPINTA DISTACCO FRIZIONE PER AUTO
CLUTCH RELEASE BEARING FOR CARS
BUTEE D'EMBRAYAGE POUR VOITURES

follows LANCIA

MODELLO	DIMENSIONI	ANNO	RIF ORIGINALE	RIF CORAM	NOTE
BIANCHINI					
BIANCHINA		65-73	4333358	**C0003**	
DEDRA					
1.6i.e-16v-2.0i.e Turbo		89-94	7681283	**C0011**	anche SW
1.8i.e-1.9 Turbo Diesel		89-94	7628856	**C0024**	
1.8 16v-1.8 GT 16v-2.0 16v		96->	7628856	**C0024**	
2.0i.e		89-94	7628856	**C0024**	
2.0 16v 4WD		94->	7681283	**C0011**	
2.0 HF Integrale 4WD		90-94	7787515	**C0234**	
DELTA					
1.1-1.3-1.4-1.5		83-91	7681283	**C0011**	
1.6		87->	7628856	**C0024**	
1.6		93->	7681283	**C0011**	
1.9 Turbo Diesel-2.0i.e 16V		87->	7628856	**C0024**	
1.6 GT-1.6 HF Turbo-		82-86	7681283	**C0011**	
1.6 GT-1.6 Turbo- 1.6 i.e Turbo		86-93	7681283	**C0011**	
Integrale 8V 2.0 Turbo 4x4		86-89	7540733	**C0022**	
1.9 Turbo DS - Integrale 2.0 HF		86-89	7681283	**C0011**	
Evoluzione Integrale 4WD 2.0		91-94	7787515	**C0234**	
FULVIA					
1.3-1.3 S-HF-Coupe		70-76	82277893	**C0031**	
1.3 Rally-Sport		67-73	82277893	**C0031**	
GIARDINIERA					
500		65-73	4333358	**C0003**	
500		74->	7683329	**C0004**	
K					
2.0-2.4 20V		94->	7681283	**C0011**	
2.0 16v Turbo		95->	7787515	**C0234**	
2.4 Turbo Diesel		94->	7787515	**C0234**	
2.4 JTD		98->	7787515	**C0234**	
3.0 24v		94->	7787515	**C0234**	
K COUPE					
2.0 16v Turbo		96->	7787515	**C0234**	
2.0 20v - 2.4 20v		96-01	7681283	**C0011**	anche SW

REGGISPINTA DISTACCO FRIZIONE PER AUTO
CLUTCH RELEASE BEARING FOR CARS
BUTEE D'EMBRAYAGE POUR VOITURES

follows LANCIA

MODELLO	DIMENSIONI	ANNO	RIF ORIGINALE	RIF CORAM	NOTE
LYBRA					
1.6 16v		99->	7681283	**C0011**	
1.8 16v-2.0 20v		99->	7628856	**C0024**	
1.9 JTD-2.4 JTD		99->	7787515	**C0234**	
PHEDRA					
(179) 2.0 (179AXA11)		02->	9633922480	**C0243**	
PRISMA					
1.3-1.5		83-89	7681283	**C0011**	
1.6		83-86	7681283	**C0011**	
1.6		86-91	7628856	**C0024**	
1.6i.e		83-91	7540733	**C0022**	
1.9 Diesel		84-91	7681283	**C0011**	
1.9 Turbo Diesel		85-87	7681283	**C0011**	
1.9 Turbo Diesel		87->	7628856	**C0024**	
2.0 4x4 Integrale		86->	7540733	**C0022**	
THEMA					
2.0i.e		85-89	7681283	**C0011**	
2.0i.e 16V - 2.0i.e 16V TURBO		88-92	7681283	**C0011**	
2.0i.e Turbo		89->	7681283	**C0011**	
2.5 Turbo Diesel		84-88	7681283	**C0011**	
2.5 Turbo D S		88-92	7681283	**C0011**	
2.8 V6		85-88	7681283	**C0011**	
2.8 V6 i.e.		84-92	7681283	**C0011**	
8.32 ferrari		87-92	7681283	**C0011**	
THEMA SW					
2.0 16V		92-94	7681283	**C0011**	
2.0i.e 16V		89-92	7681283	**C0011**	
2.0 16V TURBO - 2.0i.e 16V TURBO		88-93	7681283	**C0011**	
2.5 TURBO DS		88-97	7681283	**C0011**	
TREVI					
1.6-2.0 Volumex		81-85	82314496	**C0030**	
1.8		72->	82314496	**C0030**	
2.0		81-85	82323218	**C0032**	

REGGISPINTA DISTACCO FRIZIONE PER AUTO
CLUTCH RELEASE BEARING FOR CARS
BUTEE D'EMBRAYAGE POUR VOITURES

1

follows LANCIA

MODELLO	DIMENSIONI	ANNO	RIF ORIGINALE	RIF CORAM	NOTE
Y10					
1.0 i.e		85-92	7662270	**C0027**	
1.0 Turbo-1.1 i.e-1.1 4WD-1.3 i.e GT		85-92	7662270	**C0027**	
1.1 i.e. Fire (156AG)-1.3 i.e. Fire (156Af)		89-95	7625958	**C0099**	
1.0 i.e-1.1 i.e-1.1 i.e 4WD (156AG)		92-97	7625958	**C0099**	
1.3 i.e. Fire (156AB)		87-93	7625958	**C0099**	
1.3 i.e. GT		89-97	7625958	**C0099**	
1.2 - 1.4 12V		96->	7625958	**C0099**	
1.2 16V		97->	7625958	**C0099**	
1.1 Avenue - 1.1 Avenue 4 ruote motrici		95-95	7625958	**C0099**	
1.1 i.e. CAT .		90->	7625958	**C0099**	
Y					
1.1-1.2 - 1.2 16v-1.4-1.4 12v		96->	7625958	**C0099**	
ZETA					
2.0 16v-2.0 Turbo-2.1Turbo Diesel		94->	95656587	**C0236**	
2.0 16v-2.0 Turbo-2.1 JTD		96->	1474082080	**C0237**	
(220) 2.0 16V (220AQ5)		00-02	9633922480	**C0243**	

REGGISPINTA DISTACCO FRIZIONE PER AUTO
CLUTCH RELEASE BEARING FOR CARS
BUTEE D'EMBRAYAGE POUR VOITURES

LAND ROVER

MODELLO	DIMENSIONI	ANNO	RIF ORIGINALE	RIF CORAM	NOTE
DEFENDER					
2.5 Petrol-3.5 V8 Petrol		90->	GRB236	**C0105**	
90-110-130-2.5 Diesel - 2.5 Tdi		90->	GRB236	**C0105**	
DISCOVERY					
2.0 Petrol		93->	GRB236	**C0105**	
TDi-TDiS Diesel		89->	GRB236	**C0105**	
V8 3.5		89-93	GRB236	**C0105**	
V8 3.9		93->	GRB236	**C0105**	
FREELANDER					
1.8		97->	GRB243	**C0208**	
2.0 Diesel		97->	GRB243	**C0208**	
LAND ROVER					
2.25-2.5 Diesel-Turbo Diesel		83-90	GRB223	**C0105**	
90-110 Series 2.25-2.5 Petrol		83-90	GRB223	**C0105**	
Series II A		71->	GRB223	**C0105**	
Series III Diesel-Petrol		71-85	GRB223	**C0105**	
Series III V8		79-90	GRB223	**C0105**	
RANGE ROVER					
2.4 Turbo Diesel-2.5 TDi		86->	GRB236	**C0105**	
3.5		70-89	GRB236	**C0105**	
3.5-4.2		83->	GRB236	**C0105**	
3.9		89-91	GRB236	**C0105**	
3.9		91->	GBR236	**C0105**	

REGGISPINTA DISTACCO FRIZIONE PER AUTO
CLUTCH RELEASE BEARING FOR CARS
BUTEE D'EMBRAYAGE POUR VOITURES

1

LEYLAND DAF

MODELLO	DIMENSIONI	ANNO	RIF ORIGINALE	RIF CORAM	NOTE
SHERPA/FREIGHT ROVER					
1.6 Petrol-1.7 Petrol 4 Speed		74-82	GRB225	**C0205**	
1.7 Petrol 4 Speed		82-85	GRB237	**C0207**	
1.7 Petrol 5 Speed		85-89	GRP207	**C0235**	
1.8 Diesel		74-82	GRB225	**C0205**	
1.8 Diesel 4 Speed		82-85	GRB237	**C0207**	
1.8 Diesel 5 Speed		85-86	GRB207	**C0235**	
1.8 Petrol		74-78	GRB225	**C0205**	
2.0 Perkins Diesel 5 Speed		86-89	GRB207	**C0235**	
2.0 Petrol 4 Speed		80-85	GRB237	**C0207**	
2.0 Petrol 5 Speed		83-89	GRB207	**C0235**	
2.0 L Petrol		83->	GRB209	**C0096**	
2.5 Diesel		83-89	GRB236	**C0105**	
2.5 Diesel-2.5 Turbo Diesel (Peugeot)		89->	2041,43	**C0069**	
V8 Petrol		86->	GRB207	**C0235**	
200 SERIES VAN 2.0 T					
1.7 Petrol-2.0 Petrol		89-92	GRB207	**C0235**	
1.9 Diesel-2.0 Perkins Diesel		89->	GRB207	**C0235**	
200 SERIES VAN 2.2 T					
1.9 Diesel-2.0 Perkins Diesel		94->	GRB207	**C0235**	
2.0 Petrol 5 Speed		92->	GRB207	**C0235**	
200 SERIES VAN 2.3 T					
1.7 Petrol 5 Speed-2.0 Petrol 5 Speed		89-92	GRB207	**C0235**	
1.9 Diesel-2.0 Perkins Diesel		89-92	GRB207	**C0235**	
200 SERIES VAN 2.4 T					
1.9 Diesel-2.0 Perkins Diesel		94->	GRB207	**C0235**	
2.0 Petrol 5 Speed		92->	GRB207	**C0235**	
200 SERIES VAN & BUS 2.5 T					
1.7 Petrol 5 Speed-2.0 Petrol 5 Speed		89-92	GRB207	**C0235**	
1.9 Diesel-2.0 Perkins Diesel 5 Speed		89-92	GRB207	**C0235**	
1.9 Diesel		94->	GRB207	**C0235**	
200 SERIES VAN & BUS 2.6 T					
1.9 Diesel-2.0 Perkins Diesel 5 Speed		94->	GRB207	**C0235**	
2.0 Petrol 5 Speed		92->	GRB207	**C0235**	
1.9 Diesel		94->	GRB207	**C0235**	

REGGISPINTA DISTACCO FRIZIONE PER AUTO
CLUTCH RELEASE BEARING FOR CARS
BUTEE D'EMBRAYAGE POUR VOITURES

follows LEYLAND DAF

MODELLO	DIMENSIONI	ANNO	RIF ORIGINALE	RIF CORAM	NOTE
200 CHASS. CAB, PICK-UP 2.5 T					
1.7 Petrol 5 Speed		89-92	GRB207	**C0235**	
2.0 Petrol-2.0 Diesel Perkins		89-92	GRB207	**C0235**	
200 CHASS. CAB, PICK-UP 2.6 T					
2.0 Petrol-2.0 Diesel Perkins		92-94	GRB207	**C0235**	
200 CHASS. CAB, PICK-UP 2.8 T					
2.0 Petrol 5 Speed		89->	GRB207	**C0235**	
400 SERIES VAN 2.8 T					
2.5 Peugeot Diesel-2.5 Peugeot TD		89-97	2041,43	**C0069**	
2.5 Diesel - 2.5 Turbo Diesel		97->	6164967	**C0230**	
400 SERIES VAN & BUS 3.1 T					
2.0 Petrol 5 Speed		89->	GRB207	**C0235**	
2.5 Peugeot Diesel-2.5 Peugeot TD		89-97	2041,43	**C0069**	
2.5 Turbo Diesel		97->	6164967	**C0230**	
3.5 Petrol V8		89->	GRB207	**C0235**	
400 SERIES VAN & BUS 3.3 T					
2.0 Petrol 5 Speed		89->	GRB207	**C0235**	
2.5 Peugeot Diesel-2.5 Peugeot TD		89-97	2041,43	**C0069**	
2.5 Turbo Diesel		97->	6164967	**C0230**	
3.5 Petrol V8		89->	GRB207	**C0235**	
400 SERIES VAN & BUS 3.5 T					
2.0 Petrol 5 Speed		89->	GRB207	**C0235**	
2.5 Peugeot Diesel-2.5 Peugeot TD		89-97	2041,43	**C0069**	
2.5 Diesel-2.5 Turbo Diesel		97->	6164967	**C0230**	
3.5 Petrol V8		89->	GRB207	**C0235**	
400 CHASS.CAB, PICK-UP 3.5 T					
2.0 Petrol 5 Speed		89->	GRB207	**C0235**	
2.5 Peugeot Diesel-2.5 Peugeot TD		89-97	2041,43	**C0069**	
2.5 Diesel-2.5 Turbo Diesel		97->	6164967	**C0230**	
3.5 Petrol V8		89->	GRB207	**C0235**	
CONVOY					
3.5 Petrol V8		96->	GRB207	**C0235**	

REGGISPINTA DISTACCO FRIZIONE PER AUTO
CLUTCH RELEASE BEARING FOR CARS
BUTEE D'EMBRAYAGE POUR VOITURES

LOTUS

MODELLO	DIMENSIONI	ANNO	RIF ORIGINALE	RIF CORAM	NOTE
ECLAT					
2.0 4 Speed		75-80	8827050	**C0202**	
2.1 5 Speed			8827050	**C0202**	
2.2 Normally aspirated		80-82	8827050	**C0202**	
ELISE					
1.8		96->	GRB243	**C0208**	
ELITE					
2.2 Normally aspirated		80-82	8827050	**C0202**	

MASERATI

222					
			314620108	**C0253**	
BI-TURBO					
2.0		81->	314620108	**C0253**	
2.5		83->	314620108	**C0253**	

REGGISPINTA DISTACCO FRIZIONE PER AUTO
CLUTCH RELEASE BEARING FOR CARS
BUTEE D'EMBRAYAGE POUR VOITURES

MAZDA

MODELLO	DIMENSIONI	ANNO	RIF ORIGINALE	RIF CORAM	NOTE
121					
1.1-1.3		87-95	B301-15-510A	**C0224**	
323					
1.3 16v		89-94	B301-15-510A	**C0224**	
1.5i GLX 16v		94-95	B301-15-510A	**C0224**	
1.6 GLX 16v		89-94	B301-15-510A	**C0224**	
1.6 Turbo 4WD 16v		86-89	8540-16-510B	**C0226**	
1.8i GT 16v		89-94	8540-16-510B	**C0226**	
ESTATE 1.5-1.6		87-94	B301-15-510A	**C0224**	
323 (FA,BD,BF,BW)					
1.5 Kombi-1.6 Kombi		89-90	B301-15-510A	**C0224**	
1.6 4WD Kombi		89-93	8540-16-510B	**C0226**	
1.6 Turbo 16v- 1.6 Turbo 16v 4WD		87-89	8540-16-510B	**C0226**	
1.7 Diesel Kombi		89-91	B301-15-510A	**C0224**	
323 (BG)					
1.4-1.6		89-97	B301-15-510A	**C0224**	
1.7 Diesel		89-96	B301-15-510A	**C0224**	
1.9i 16v		89-94	B301-15-510A	**C0224**	
1.9i 16v DOHC-1.9i 16v 4WD		89-94	8540-16-510B	**C0226**	
1.9 GTX Turbo 4WD-1.9 GT-R Turbo 4WD		89-94	8540-16-510B	**C0226**	
323 C (BA)					
1.4-1.5-1.9		94-98	B301-15-510A	**C0224**	
1.9		04.94	8540-16-510B	**C0226**	
323 F (BA)					
1.9		04.94	8540-16-510B	**C0226**	
1.5-1.9		94-98	B301-15-510A	**C0224**	
2.0 V6		94-98	8540-16-510B	**C0226**	
323 P (BA)					
1.4-1.5-2.0 D		96->	B301-15-510A	**C0224**	

REGGISPINTA DISTACCO FRIZIONE PER AUTO
CLUTCH RELEASE BEARING FOR CARS
BUTEE D'EMBRAYAGE POUR VOITURES

follows MAZDA

MODELLO	DIMENSIONI	ANNO	RIF ORIGINALE	RIF CORAM	NOTE
323 S (BA)					
1.9		04.94	8540-16-510B	**C0226**	
1.4-1.5-1.6-1.9		94-98	B301-15-510A	**C0224**	
1.7 Turbo Diesel		94-96	8540-16-510B	**C0226**	
2.0 Diesel		97-98	B301-15-510A	**C0224**	
323 F (BJ)					
1.4-1.5-2.0 Diesel		98->	B301-15-510A	**C0224**	
2.0 Turbo Diesel		98->	8540-16-510B	**C0226**	
323 S (BJ)					
1.4-1.5-2.0 Diesel		98->	B301-15-510A	**C0224**	
2.0 Turbo Diesel		98->	8540-16-510B	**C0226**	
616 MONTROSE					
2.0 R.W.D		78-83	8540-16-510B	**C0226**	
626 (CB,GC,GD,GV)					
1.6-1.8-1.8 Kombi-2.0		78-92	8540-16-510B	**C0226**	
2.0 Kombi-2.0 12v-2.0 16v Kombi		78-91	8540-16-510B	**C0226**	
2.0 16v 4WD-2.2-2.2 Kombi-2.2 4WD		78-91	8540-16-510B	**C0226**	
2.0 Diesel-2.0 Diesel Kombi		78-91	8540-16-510B	**C0226**	
626 (GE)					
1.9-2.0 Japan-2.0 USA-2.0 4WD		91-97	8540-16-510B	**C0226**	
2.0 Diesel Comprex-2.5 V6		91-97	8540-16-510B	**C0226**	
626 (GF,GW)					
1.9-1.9 Kombi-2.0-2.0 HP-2.0 Kombi		97->	8540-16-510B	**C0226**	
2.0 Turbo Diesel-2.0 Turbo Diesel Kombi		98->	8540-16-510B	**C0226**	
818					
1.3-1.6		71-78	084141165A-D	**C0077**	

REGGISPINTA DISTACCO FRIZIONE PER AUTO
CLUTCH RELEASE BEARING FOR CARS
BUTEE D'EMBRAYAGE POUR VOITURES

follows MAZDA

MODELLO	DIMENSIONI	ANNO	RIF ORIGINALE	RIF CORAM	NOTE
929					
1.8		73-78	084141165A-D	**C0077**	
2.0 LIM-2.0 Kombi-2.2-3.0 V6		78-93	8540-16-510B	**C0226**	
1000					
1.0		73-77	084141165A-D	**C0077**	
1300					
1.3		74-78	084141165A-D	**C0077**	
B-SERIE (UF) PICKUP					
1.8		77->	084141165A-D	**C0077**	
2.2-2.5 Diesel-2.5 Diesel 4WD		96->	8540-16-510B	**C0226**	
2.5 Turbo Diesel 4WD-2.6 4WD		96->	8540-16-510B	**C0226**	
DEMIO					
1.4-1.4 HP		98->	B301-15-510A	**C0224**	
E / F SERIE					
1.8-2.0-2.0 4WD		84-95	8540-16-510B	**C0226**	
2.2 Diesel-2.2 Diesel 4WD		88->	8540-16-510B	**C0226**	
MPV					
2.5 Turbo Diesel-3.0 V6		95->	8540-16-510B	**C0226**	
MX-3					
1.6 16v		91->	B301-15-510A	**C0224**	
1.9 V6		91->	8540-16-510B	**C0226**	
MX-6					
2.0 16v-2.5 V6		91->	8540-16-510B	**C0226**	
PREMACY					
2.0 Turbo Diesel		99->	8540-16-510B	**C0226**	

REGGISPINTA DISTACCO FRIZIONE PER AUTO
CLUTCH RELEASE BEARING FOR CARS
BUTEE D'EMBRAYAGE POUR VOITURES

1

follows MAZDA

MODELLO	DIMENSIONI	ANNO	RIF ORIGINALE	RIF CORAM	NOTE
RX 5					
CD 22		78->	8540-16-510B	**C0226**	
RX 7					
SA22C-FB1312-FC-FC Turbo		79-91	8540-16-510B	**C0226**	
RX9					
LA42S		79-81	8540-16-510B	**C0226**	
XEDOS 6					
1.6		92->	B301-15-510A	**C0224**	
2.0 V6		92->	8540-16-510B	**C0226**	
XEDOS 9					
2.0 V6-2.3-2.5 V6-2.5 V6 4WD		93->	8540-16-510B	**C0226**	

REGGISPINTA DISTACCO FRIZIONE PER AUTO
CLUTCH RELEASE BEARING FOR CARS
BUTEE D'EMBRAYAGE POUR VOITURES

MERCEDES-BENZ

MODELLO	DIMENSIONI	ANNO	RIF ORIGINALE	RIF CORAM	NOTE
190 SERIES W201					
190 E 1.8		90-93	0002508715	**C0095**	
190 2.0		83-93	0002508715	**C0095**	
190 D 2.0 Diesel		83->	0002508715	**C0095**	
190 E 2.3		86-89	0002508715	**C0095**	
190 E 2.3 16v		84-88	0002508715	**C0095**	
190 E 2.5 16v		90-93	0002508715	**C0095**	
190 D 2.5		85-89	0002508715	**C0095**	
190 E 2.6		86-89	0002508715	**C0095**	
190 D 3.2		86-89	0002508715	**C0095**	
200 SERIES W115					
200		68->	0002505215	**C0092**	
200		68-76	0002506815	**C0093**	
200 Diesel		68->	0002505215	**C0092**	
200 Diesel		68-80	0002506815	**C0093**	
200 SERIES W123					
200		76->	0002505215	**C0092**	
200		->80	0002506815	**C0093**	
200 Diesel		76->	0002505215	**C0092**	
200 Diesel		->80	0002506815	**C0093**	
200 Diesel 4/5 Speed		80-85	0002508715	**C0095**	
200 SERIES W123-220					
200 4/5 Speed		80-85	0002508715	**C0095**	
200 SERIES W124					
200		84-90	0002508715	**C0095**	
200 E-CE		88-93	0002508715	**C0095**	
200 T-TE		85-92	0002508715	**C0095**	
200 D-TD		84-93	0002508715	**C0095**	
200 CE Cabrio		93	0002508715	**C0095**	
220 SERIES					
220		68->	0002505215	**C0092**	
220 Diesel		68->	0002505215	**C0092**	
220 Diesel		->79	0002506815	**C0093**	

REGGISPINTA DISTACCO FRIZIONE PER AUTO
CLUTCH RELEASE BEARING FOR CARS
BUTEE D'EMBRAYAGE POUR VOITURES

1

follows MERCEDES-BENZ

MODELLO	DIMENSIONI	ANNO	RIF ORIGINALE	RIF CORAM	NOTE
230 SERIES					
230		68->	0002505215	**C0092**	
230		76->	0002505215	**C0092**	
230		->80	0002506815	**C0093**	
230 C Coupe'		77->	0002505215	**C0092**	
230 C Coupe'		->80	0002506815	**C0093**	
230 CE (123)		->85	0002508715	**C0095**	
230 E (123) 4/5 Speed		80-85	0002508715	**C0095**	
230 E (124)		84-89	0002508715	**C0095**	
230 E		89-92	0002508715	**C0095**	
230 T(123)		78->	0002505215	**C0092**	
230 TE(123)		80->	0002508715	**C0095**	
230 TE(124)		85-92	0002508715	**C0095**	
240 SERIES					
240 D(123)-TD (123)		->80	0002506815	**C0093**	
240 D 3.0		74->	0002505215	**C0092**	
240 D(123)-TD(123) 4 Speed		80->	0002508715	**C0095**	
240 D(123) 5 Speed		81-85	0002508715	**C0095**	
250 SERIES					
250 (114)		68-85	0002505215	**C0092**	
250 (123)		76-81	0002505215	**C0092**	
250 (123)		81-85	0002506815	**C0093**	
250 (123) 5 Speed		81-85	0002508715	**C0095**	
250 T(123)		78->	0002505215	**C0092**	
250 T(123)		->85	0002506815	**C0093**	
250 D(124)-TD(124)		84-89	0002508715	**C0095**	
260 SERIES					
260 E(124)		85-89	0002508715	**C0095**	
260 E(124)		85-89	0002508715	**C0095**	
260 SE(126)		85-91	0002508715	**C0095**	
280 SERIES					
280 (123)		76->	0002505215	**C0092**	
280 (123)		->81	0002506815	**C0093**	
280 C(123)		77->	0002505215	**C0092**	
280 C(123)		->85	0002506815	**C0093**	
280 CE(123)		77->	0002505215	**C0092**	
280 CE(123)-E(123) 4 Speed		->85	0002506815	**C0093**	
280 SE(126)		79-85	0002506815	**C0093**	
280 SL-SEL(126)		80-85	0002506815	**C0093**	
280 SL(107)-SLC(107)		->85	0002506815	**C0093**	

REGGISPINTA DISTACCO FRIZIONE PER AUTO
CLUTCH RELEASE BEARING FOR CARS
BUTEE D'EMBRAYAGE POUR VOITURES

follows MERCEDES-BENZ

MODELLO	DIMENSIONI	ANNO	RIF ORIGINALE	RIF CORAM	NOTE
280 TE(123) 4 Speed		->85	0002506815	**C0093**	
280 CE(123) 5 Speed		81-85	0002508715	**C0095**	
280 E(123) 5 Speed		81-85	0002506815	**C0093**	
280 S(126) 5 Speed-SE(126)		81-85	0002508715	**C0095**	
280 SEL(116) 5 Speed		81-85	0002508715	**C0095**	
280 SL(107)		->85	0002508715	**C0095**	
280 TE(123) 5 Speed		81-85	0002508715	**C0095**	
280 E(114)		72-76	0002505215	**C0092**	
280 E(123)		76->	0002505215	**C0092**	
280 S(116)		72->	0002505215	**C0092**	
280 SEC(126)		->91	0002505215	**C0092**	
280 SL(116)-SL(107)-SLC(107)			0002505215	**C0092**	
280 TE(123)		78->	0002505215	**C0092**	
300 SERIES					
300 CE(124)		87-89	0002508715	**C0095**	
300 E(124) - E4Matic		84-89	0002508715	**C0095**	
300 SE(126)-SL(126)		85-91	0002508715	**C0095**	
300 SL(107)-TE(124)		85-89	0002508715	**C0095**	
300 TE 4 Matic (124)		86-89	0002508715	**C0095**	
300 D(123) 4 Speed-TD(123)		86->	0002505215	**C0092**	
300 D(123) 4Speed-TD(123) 4 Speed		->85	0002506815	**C0093**	
300 D(123)5 Speed-TD(123) 5 Speed		81-85	0002508715	**C0095**	
300 D(124)		84-89	0002508715	**C0095**	
300 TD(124)		86-89	0002508715	**C0095**	
350 SERIES					
SE (116)-SEL (116)-SL (107)-SLC (107)			0002505215	**C0092**	
SE (116)-SEL (116)-SL (107)-SLC (107)			0002506815	**C0093**	
E CLASS					
E 200		92->	0002508715	**C0095**	
E 200 Diesel		93->	0002508715	**C0095**	
G WAGON/OFF ROAD					
230 G(460)		79-80	0002505215	**C0092**	
230 GE(460)		82-90	0002505215	**C0092**	
230 GE(461)		90-93	0002505215	**C0092**	
230 GE(461) G/Box 717		90-93	0002508715	**C0095**	
240 GD-300 GD(460)		79-90	0002505215	**C0092**	
240 GD (460)-280 GE(460)		79-90	0002508715	**C0095**	
250 GD (461)		90-93	0002506815	**C0093**	
290 GD		90-93	0002508715	**C0095**	
G 290 Diesel		93->	0002508715	**C0095**	

REGGISPINTA DISTACCO FRIZIONE PER AUTO
CLUTCH RELEASE BEARING FOR CARS
BUTEE D'EMBRAYAGE POUR VOITURES

1

follows MERCEDES-BENZ

MODELLO	DIMENSIONI	ANNO	RIF ORIGINALE	RIF CORAM	NOTE
206 - 210					
207 D (Mot. OM615-OM616)			0002505215	**C0092**	
208 (Mot. 102,115)			0002505215	**C0092**	
208 D (Mot. OM601-OM615)			0002505215	**C0092**	
209 D (Mot. OM617)-210 D (Mot. OM602)			0002505215	**C0092**	
210 (Mot. 102-115)			0002505215	**C0092**	
306 - 315					
307 D (Mot. OM616)			0002505215	**C0092**	
308 D (Mot. OM601)-308 (Mot. 102,115)			0002505215	**C0092**	
309 D (Mot. OM617)			0002505215	**C0092**	
310 (Mot. 102,115)-310 D (Mot. OM602)			0002505215	**C0092**	
405 - 407					
L 406 DG (Mot. OM615-OM616-OM621)			0002505215	**C0092**	
LK 406 DG (Mot. OM615-OM616-OM621)			0002505215	**C0092**	
LKO 406 DG (Mot. OM615-OM616-OM621)			0002505215	**C0092**	
L 407 D (Mot. OM615-OM616-OM621)			0002505215	**C0092**	
LK 407 D (Mot. OM615-OM616-OM621)			0002505215	**C0092**	
LKO 407 D (Mot. OM615-OM616-OM621)			0002505215	**C0092**	
408 - 410					
408 D (Mot. OM601)			0002505215	**C0092**	
L 408 G (Mot. M115-M121)			0002505215	**C0092**	
LK 408 G (Mot. M115-M121)			0002505215	**C0092**	
409 D (Mot. OM617)			0002505215	**C0092**	
LKO 409 (Mot. OM115,121)			0002505215	**C0092**	
L 410 - LK 410 - LF 410 (Mot. OM102)			0002505215	**C0092**	
410 (Mot. OM102) - 410 D (Mot. OM602)			0002505215	**C0092**	
O 307 - O 309					
O 309 B (Mot. OM102-OM115-OM121)			0002505215	**C0092**	
O 309 D (Mot. OM615-OM616-OM621)			0002505215	**C0092**	
UNIMOG					
U 95/424 - U 1000			0002504415	**C0150**	
U 1300-U 1500-U 1300 L-U 1700 L			0002504415	**C0150**	

REGGISPINTA DISTACCO FRIZIONE PER AUTO
CLUTCH RELEASE BEARING FOR CARS
BUTEE D'EMBRAYAGE POUR VOITURES

METRO CAB

MODELLO	DIMENSIONI	ANNO	RIF ORIGINALE	RIF CORAM	NOTE
METRO CAB					
METRO CAB		86->	6157277	**C0108**	
METRO CAB (Ford MTX75 GearBox)		91->	6164967	**C0230**	

M.G.

MGF					
1.8-1.8 VVC		95->	GRB90251	**C0208**	
MIDGET					
1.5		75-80	GRP207	**C0235**	
RV8					
3.9		93->	GRP207	**C0235**	

REGGISPINTA DISTACCO FRIZIONE PER AUTO
CLUTCH RELEASE BEARING FOR CARS
BUTEE D'EMBRAYAGE POUR VOITURES

1

MITSUBISHI

MODELLO	DIMENSIONI	ANNO	RIF ORIGINALE	RIF CORAM	NOTE
CARISMA					
1.6-1.8		95->	M819939	**C0233**	
1.9 Turbo Diesel		96->	M819939	**C0233**	
CELESTE					
1.6 ST		76-82	MD701283	**C0235**	
COLT/MAGNUM					
1.2-1.3		78-88	MD706180	**C0215**	
1.4-1.6		78-83	MD706180	**C0215**	
1.4-1.5 GLI-GLXI		88->	MD706180	**C0215**	
1.6 Turbo- GTI 16V		87->	MD706180	**C0215**	
1.8 Diesel		83->	MD706180	**C0215**	
COLT MIRAGE					
1.2-1.4-1.4 Turbo		79-84	MD706180	**C0215**	
COLT II / MIRAGE					
1.2-1.3-1.5		83-88	MD706180	**C0215**	
1.6 Turbo		83-88	MD706180	**C0215**	
1.8 Diesel		83-87	MD706180	**C0215**	
COLT III / MIRAGE					
1.3-1.5-1.6 GTI 16v-1.8 GTI 16v		88-91	MD706180	**C0215**	
1.8 Diesel		87->	MD706180	**C0215**	
COLT IV / MIRAGE					
1.3-1.6		91-99	MD706180	**C0215**	
1.8 GTI		91-99	MD706180	**C0215**	
CORDIA					
1.6-1.6 Turbo-1.8-1.8 Turbo-1.8 ECI Turbo		82-87	MD706180	**C0215**	
ECLIPSE					
2.0 GS 16V		91->	MD706180	**C0215**	

REGGISPINTA DISTACCO FRIZIONE PER AUTO
CLUTCH RELEASE BEARING FOR CARS
BUTEE D'EMBRAYAGE POUR VOITURES

follows MITSUBISHI

MODELLO	DIMENSIONI	ANNO	RIF ORIGINALE	RIF CORAM	NOTE
GALANT					
1.4		71-75	MD701283	**C0235**	
1.6 GL		73-80	MD701283	**C0235**	
1.6 GL		84-88	MD706180	**C0215**	
1.8 GLS-1.8 Turbo Diesel		88-93	MD706180	**C0215**	
1.8 GLX -1.8 GLS Turbo Diesel		86-89	MD706180	**C0215**	
1.8 GLSI-1.8 GLI		93->	MD706180	**C0215**	
2.0 GLS-2.0 GLSI-2.0 GTI 16 V		83->	MD706180	**C0215**	
2.0 Turbo		85-88	MD706180	**C0215**	
1.6 L-1.6 GL-1.8 GLSI-2.0 GLSI-2.0 GLXI		87-92	MD706180	**C0215**	
2.0 GLSI 4WD-2.0 GTI 16v-2.0 GTI 16v 4WD		88-92	MD706180	**C0215**	
1.8 Turbo Diesel		88-92	MD706180	**C0215**	
1.8 GLI-1.8 GLSI-2.0 GLSI-2.0 GLXI		92->	MD706180	**C0215**	
2.0 V6-2.0 Turbo Diesel		92->	MD706180	**C0215**	
L300					
1.6 (L032P)		79-80	MD701283	**C0235**	
LANCER					
1.2 GL-1.4 GL GLX		79-80	MD701283	**C0235**	
1.2 GL-1.5 GLX		84-86	MD706180	**C0215**	
1.6 GLXI 16V-1.6 GTI 16V		88->	MD706180	**C0215**	
1.8 GL-D Diesel		84->	MD706180	**C0215**	
1.8 GTI 16V		90-95	MD706180	**C0215**	
SAPPORO					
1.6 SL		76-80	MD701283	**C0235**	
2.4		87-89	MD706180	**C0215**	
SIGMA / DIAMANTE					
3.0 V6 12V		93->	MD706180	**C0215**	
SPACE RUNNER					
1.8 GLI-1.8 GLXI		91->	MD706180	**C0215**	
SPACE STAR					
1.3		98->	M819939	**C0233**	

REGGISPINTA DISTACCO FRIZIONE PER AUTO
CLUTCH RELEASE BEARING FOR CARS
BUTEE D'EMBRAYAGE POUR VOITURES

follows MITSUBISHI

MODELLO	DIMENSIONI	ANNO	RIF ORIGINALE	RIF CORAM	NOTE
SPACE VAN					
1.8 GLX-1.8 Turbo Diesel		86-90	MD706180	**C0215**	
SPACE WAGON					
1.6		83-88	MD706180	**C0215**	
1.8 GLX-1.8 GLXI-1.8 Turbo Diesel		84-92	MD706180	**C0215**	
2.0 4WD		86-89	MD706180	**C0215**	
2.0 GLXI		92->	MD706180	**C0215**	
2.0 GLX Turbo Diesel		95->	MD706180	**C0215**	
TREDIA/CORDIA					
1.4-1.6-1.6 Turbo		82-85	MD706180	**C0215**	
1.8-1.8 Turbo		82-84	MD706180	**C0215**	
2.0 4WD		85-87	MD706180	**C0215**	
MOSKVICH					
ALEKO					
1.4		87->	21411601180	**C0225**	
412 ESTATE					
EXC Diesel		70-74	412-1801819	**C0190**	
427 ESTATE					
EXC Diesel		70-74	412-1801819	**C0190**	
MORGAN					
PLUS FOUR					
(FIAT 2000 TC eng.)		83->	4237218	**C0013**	
(FIAT 1600 TC eng.)		83->	4237218	**C0013**	
MULTICAR					
M 21					
M21			1800011108	**C0094**	

REGGISPINTA DISTACCO FRIZIONE PER AUTO
CLUTCH RELEASE BEARING FOR CARS
BUTEE D'EMBRAYAGE POUR VOITURES

NISSAN

MODELLO	DIMENSIONI	ANNO	RIF ORIGINALE	RIF CORAM	NOTE
100 NX					
1.6-2.0 GTI		90->	30502,52A60	**C0222**	
1.6 16V		92-95	DA30502,M8000	**C0220**	
200 SX					
1.8 i Turbo 16V		90-94	DA30502,21000	**C0221**	
2.0 i Turbo 16V		94->	DA30502,21000	**C0221**	
200 Z - 240 Z - 260 Z					
200 Z-240 Z-260 Z		69-74	DA30502,21000	**C0221**	
280 Z - 280 ZX/ZXT					
280 Z-280 ZX-280 ZXT		74-83	DA30502,21000	**C0221**	
280 ZX Turbo-280 ZXT Turbo		82-83	DA30502,21000	**C0221**	
300 ZX/ZXT					
300 ZX/ZXT		83-89	DA30502,21000	**C0221**	
300 ZX/ZXT Turbo		83-89	DA30502,21000	**C0221**	
ALMERA					
1.4i-2.0 Diesel		95->	DA30502,M8000	**C0220**	
1.6-2.0 GTI		95->	30502,52A60	**C0222**	
ALMERA I					
2.0 D		95-00	30502-81N00	**C0220**	
Hatchback 2.0 D		95-00	30502-81N00	**C0220**	
ALMERA II					
1.5		00->	30502-81N00	**C0220**	
Hatchback 1.5		00->	30502-81N00	**C0220**	
BLUEBIRD					
160 B-180 B-200 B		73-83	DA30502,21000	**C0221**	
1.6 (T12-72)		85-91	30502,52A60	**C0222**	
1.6 (U11)-1.8 (U11)-2.0 (U11)		83-88	DA30502,M8000	**C0220**	
2.0 i		84-88	30502-81N00	**C0220**	

REGGISPINTA DISTACCO FRIZIONE PER AUTO
CLUTCH RELEASE BEARING FOR CARS
BUTEE D'EMBRAYAGE POUR VOITURES

follows NISSAN

MODELLO	DIMENSIONI	ANNO	RIF ORIGINALE	RIF CORAM	NOTE
BLUEBIRD Station Wagon					
2.0		86-90	30502-81N00	**C0220**	
CABSTAR					
1.3-1.5-1.6		73-76	DA30502,21000	**C0221**	
2.0 F20-F22-F23		76-94	DA30502,21000	**C0221**	
2.2 Diesel-2.3 Diesel-2.5 Diesel		76->	DA30502,21000	**C0221**	
CEDRIC GLORIA					
200 C-200 C Diesel		71-79	DA30502,21000	**C0221**	
240 C-260 C		73-75	DA30502,21000	**C0221**	
2.8 Diesel		79-83	DA30502,21000	**C0221**	
2.8 (P430)		79-83	DA30502,21000	**C0221**	
CHERRY (EUROPE)					
1.2-1.5 GTI		83-85	510513	**C0036**	
CHERRY					
1.2-1.3		81-86	DA30502,M8000	**C0220**	
1.5-1.5 Turbo		81-86	DA30502,M8000	**C0220**	
1.6 (N12)-1.7		85-86	DA30502,M8000	**C0220**	
CLIPPER					
2.0		73-84	DA30502,21000	**C0221**	
2.2 Diesel		74-84	DA30502,21000	**C0221**	
E20 SERIES VAN					
1.5-1.6		73-82	DA30502,21000	**C0221**	
2.0 (PE20)		76-82	DA30502,21000	**C0221**	
2.2 Diesel		79-82	DA30502,21000	**C0221**	
FAIRLADY/Z SERIES					
240Z		71-75	DA30502,21000	**C0221**	
2.6 (260Z)		74-78	DA30502,21000	**C0221**	
2.8 (280ZX)		79-84	DA30502,21000	**C0221**	
3.0-3.0 Turbo		83-90	DA30502,21000	**C0221**	

REGGISPINTA DISTACCO FRIZIONE PER AUTO
CLUTCH RELEASE BEARING FOR CARS
BUTEE D'EMBRAYAGE POUR VOITURES

follows NISSAN

MODELLO	DIMENSIONI	ANNO	RIF ORIGINALE	RIF CORAM	NOTE
HOMER					
1.5-2.2 Diesel		76-80	DA30502,21000	**C0221**	
(F20)-(H200)		76-80	DA30502,21000	**C0221**	
(T20)		72-75	DA30502,21000	**C0221**	
LAUREL					
180 L-200 L		72-78	DA30502,21000	**C0221**	
240 L Coupe		77-81	DA30502,21000	**C0221**	
200 L-200 Coupe-240 L		77-81	DA30502,21000	**C0221**	
2.0 (C130)		75-77	DA30502,21000	**C0221**	
2.0 (C230)		77-81	DA30502,21000	**C0221**	
2.0 GL (C31)		81-84	DA30502,21000	**C0221**	
2.0 (C32)		84-87	DA30502,21000	**C0221**	
2.4 (C230)		77-81	DA30502,21000	**C0221**	
2.4 SGL-2.4 SGX		81-89	DA30502,21000	**C0221**	
2.8 Diesel		81-89	DA30502,21000	**C0221**	
MICRA					
1.0 (K10)-1.0 (K11)		82->	30502,01B00	**C0223**	
1.2 (K10)		89-93	30502,01B00	**C0223**	
1.0 Turbo		85-93	DA30502,M8000	**C0220**	
1.3 (K11)		93->	30502,52A60	**C0222**	
PATHFINDER					
3.3 V6		97->	DA30502,21000	**C0221**	
PATROL					
2.8 Petrol (160)		82-85	DA30502,21000	**C0221**	
2.8 Petrol (260)		86-89	DA30502,21000	**C0221**	
3.3 Diesel (160)		82-85	DA30502,21000	**C0221**	
3.3 Diesel (260)		85-89	DA30502,21000	**C0221**	
3.3 Turbo Diesel		83-89	DA30502,21000	**C0221**	
4.0		79-87	DA30502,21000	**C0221**	
3.0		88->	7701349113	**C0041**	
4.2 Diesel		87-88	DA30502,21000	**C0221**	
PATROL GR I (Y60)					
2.8 TD (Y60A)		88-97	30502-0F500	**C0257**	

REGGISPINTA DISTACCO FRIZIONE PER AUTO
CLUTCH RELEASE BEARING FOR CARS
BUTEE D'EMBRAYAGE POUR VOITURES

follows NISSAN

MODELLO	DIMENSIONI	ANNO	RIF ORIGINALE	RIF CORAM	NOTE
PATROL SW (W260)					
2.8 TD		89-95	30502-0F500	**C0257**	
PICK-UP					
1.5 (620)-1.6 (720)-2.2 Diesel (720)		75-82	DA30502,21000	**C0221**	
2.2 4WD-2.3 Diesel-2.5 Diesel 4WD		83-86	DA30502,21000	**C0221**	
1.8 (720)-2.0 (D21)		81-93	DA30502,21000	**C0221**	
2.2 King Cab 4wd (720)		83-85	DA30502,21000	**C0221**	
2.4 4wd (D21)		86->	DA30502,21000	**C0221**	
PRAIRIE					
1.5 (M10)-1.8 (M10)		83-85	DA30502,M8000	**C0220**	
1.5 (M10)-1.8 (M10)		85-89	30502,52A60	**C0222**	
1.8 SGL		83-85	30502-81N00	**C0220**	
PRIMERA (P10)					
1.6		90->	DA30502,M8000	**C0220**	
2.0-2.0 GT		90-97	30502,52A60	**C0222**	
2.0 Diesel		91->	DA30502,M8000	**C0220**	
PRIMERA (P11)					
1.6		96->	DA30502,M8000	**C0220**	
1.6 16V		96->	30502-81N00	**C0220**	
2.0-2.0 SRI-2.0 GT		96->	30502,52A60	**C0222**	
PRIMERA (P12)					
1.6		02->	30502-81N00	**C0220**	
PRIMERA Hatchback (P10)					
1.6		90-96	30502-81N00	**C0220**	
PRIMERA Hatchback (P11)					
1.6 16V		96-02	30502-81N00	**C0220**	
PRIMERA Hatchback (P12)					
1.6		02->	30502-81N00	**C0220**	

REGGISPINTA DISTACCO FRIZIONE PER AUTO
CLUTCH RELEASE BEARING FOR CARS
BUTEE D'EMBRAYAGE POUR VOITURES

follows NISSAN

MODELLO	DIMENSIONI	ANNO	RIF ORIGINALE	RIF CORAM	NOTE
PRIMERA TRAVELLER (W10)					
1.6-2.0		90-97	30502,52A60	**C0222**	
2.0 Diesel		90-96	DA30502,M8000	**C0220**	
PRIMERA TRAVELLER (WP11)					
1.6		98->	DA30502,M8000	**C0220**	
1.6 16V		98->	30502-81N00	**C0220**	
2.0		98->	30502,52A60	**C0222**	
SERENA (C23M)					
1.6 16V		93->	30502-0F500	**C0257 -**	**C0258**
SERENA					
2.0 16V		94-96	DA30502,21000	**C0221**	
SERENA (C23M)					
2.0 D		92->	30502-9C000	**C0258**	
2.3 D		95->	30502-9C000	**C0258**	
SILVIA					
1.8 Turbo ZX EFi-2.0 ZX		84-89	DA30502,21000	**C0221**	
2.0 ZX		83-88	DA30502,21000	**C0221**	
SKYLINE					
160 K-180 K		74->	DA30502,21000	**C0221**	
2.4 (240K)		73-75	DA30502,21000	**C0221**	
2.4 (240K)		78-81	DA30502,21000	**C0221**	
STANZA					
1.6 (T11)-1.8 (T11)-1.7 Diesel		81-86	DA30502,M8000	**C0220**	
1.8 SGL		83-85	30502-81N00	**C0220**	
STANZA Hatchback					
1.6 - 1.8		81-85	30502-81N00	**C0220**	

REGGISPINTA DISTACCO FRIZIONE PER AUTO
CLUTCH RELEASE BEARING FOR CARS
BUTEE D'EMBRAYAGE POUR VOITURES

follows NISSAN

MODELLO	DIMENSIONI	ANNO	RIF ORIGINALE	RIF CORAM	NOTE
SUNNY					
1.2		71-83	DA30502,21000	**C0221**	
1.3 DX/GS-L/LX-1.3 Estate		82-91	DA30502,M8000	**C0220**	
1.4 LS-1.4 LX 16V-1.4i 16V		89-95	DA30502,M8000	**C0220**	
1.5 B 310		81-82	DA30502,21000	**C0221**	
1.5 DX/SLG-2.0 Diesel LX		83->	DA30502,M8000	**C0220**	
1.6 LX-SLX-GSX		86-91	3050252A60	**C0222**	
1.6 4WD		86-90	DA30502,M8000	**C0220**	
1.6 SLX		91-92	30502,52A60	**C0222**	
1.7 Diesel LX		86-91	30502,52A60	**C0222**	
2.0 e GTi 16V		92-94	30502,52A60	**C0222**	
SUNNY II					
1.6 i 4x4 (A)		86-90	30502-81N00	**C0220**	
SUNNY II Traveller					
1.6 i 4x4 (A)		86-89	30502-81N00	**C0220**	
SUNNY III					
2.0 D		90-95	30502-81N00	**C0220**	
Hatchback 2.0 D		90-95	30502-81N00	**C0220**	
Liftback 2.0 D		90-95	30502-81N00	**C0220**	
Traveller 2.0 D		91->	30502-81N00	**C0220**	
SUNNY VAN					
1.2		71-83	DA30502,21000	**C0221**	
1.3		82-89	DA30502,M8000	**C0220**	
1.4 140Y		89-91	DA30502,21000	**C0221**	
1.4		89-92	DA30502,M8000	**C0220**	
1.5		81-82	DA30502,21000	**C0221**	
1.5		83-86	DA30502,M8000	**C0220**	
1.6		86-95	30502,52A60	**C0222**	
1.7 Diesel		92->	30502,52A60	**C0222**	
TERRANO					
2.4 4WD		87-92	30502,52A60	**C0222**	
2.3 Diesel (D21)		85->	DA30502,21000	**C0221**	
3.0		90-95	DA30502,21000	**C0221**	

REGGISPINTA DISTACCO FRIZIONE PER AUTO
CLUTCH RELEASE BEARING FOR CARS
BUTEE D'EMBRAYAGE POUR VOITURES

follows NISSAN

MODELLO	DIMENSIONI	ANNO	RIF ORIGINALE	RIF CORAM	NOTE
TERRANO II					
2.4 4WD		96-02	30502-0F500	**C0257**	
2.4 i 12V 4WD		93-96	30502-0F500	**C0257**	
URVAN					
1.6 (VB23)		80-83	DA30502,21000	**C0221**	
1.8 (E23)		82-86	DA30502,21000	**C0221**	
2.0 (E20)-(E23)		78-87	DA30502,21000	**C0221**	
2.0 (E24)		87-93	DA30502,21000	**C0221**	
2.3 Diesel (E23)		82-87	DA30502,21000	**C0221**	
2.4 Diesel (E23)		85-87	DA30502,21000	**C0221**	
VANETTE					
1.2 (C120)		79-86	DA30502,21000	**C0221**	
1.5 (C120)		79-86	DA30502,21000	**C0221**	
1.5 (C220)		86-95	DA30502,21000	**C0221**	
2.0 Diesel		82-91	DA30502,21000	**C0221**	
VANETTE autobus (C22)					
2.0 D (ULC22)		86-95	30502-9C000	**C0258**	
VANETTE CARGO autobus (HC23)					
1.6 i		96->	30502-9C000	**C0258**	
2.3 D		96->	30502-9C000	**C0258**	
VANETTE CARGO furgon.(HC23)					
1.6 i		95->	30502-9C000	**C0258**	
2.3 D		95->	30502-9C000	**C0258**	
VANETTE furgonato (HC23)					
2.0 D		91-95	30502-9C000	**C0258**	
VIOLET					
140J (J710)		73-77	DA30502,21000	**C0221**	
140J (JA10)		77-81	DA30502,21000	**C0221**	
160J (710,A10)		74-81	DA30502,21000	**C0221**	
160J (P710,A10)		74-81	DA30502,21000	**C0221**	

REGGISPINTA DISTACCO FRIZIONE PER AUTO
CLUTCH RELEASE BEARING FOR CARS
BUTEE D'EMBRAYAGE POUR VOITURES

1

OLTCIT

MODELLO	DIMENSIONI	ANNO	RIF ORIGINALE	RIF CORAM	NOTE
CLUB					
1.1-1.2-1.3		82->	5478534	**C0081**	

OPEL

MODELLO	DIMENSIONI	ANNO	RIF ORIGINALE	RIF CORAM	NOTE
ADMIRAL					
2600		64-69	668648	**C0048**	
2800		69->	668648	**C0048**	
ASCONA A / CAVALIER					
1.2		71-75	668636	**C0047**	
1.6-1.9		70-75	668648	**C0048**	
ASCONA B / CAVALIER					
1.2		75-79	668636	**C0047**	
1.3-1.6-1.9-2.0-2.0 D-2.0 E		75-81	668648	**C0048**	
ASCONA C / CAVALIER					
1.3N-1.3S		81-88	668648	**C0048**	
1.3S		->88	668652	**C0050**	
1.6i		86-89	668652	**C0050**	
1.6N-1.6S		81->	668645	**C0049**	
1.6S 60VKw		86-88	668652	**C0050**	
1.6N-1.6S		->88	668651	**C0151**	
1.6 Diesel		82->	668645	**C0049**	
1.6 Diesel		->88	668651	**C0151**	
1.8i		85->	668645	**C0049**	
1.8N-20i		86->	668652	**C0050**	
1.8N Export		86-88	668651	**C0151**	
2.0i (F16 Gearbox)		86-88	668661	**C0151**	
ASCONA/MANTA A					
1.2		71-75	668636	**C0047**	
1.6-1.9		70-75	668648	**C0048**	

REGGISPINTA DISTACCO FRIZIONE PER AUTO
CLUTCH RELEASE BEARING FOR CARS
BUTEE D'EMBRAYAGE POUR VOITURES

follows OPEL

MODELLO	DIMENSIONI	ANNO	RIF ORIGINALE	RIF CORAM	NOTE
ASCONA/MANTA B					
1.2		75-79	668636	**C0047**	
1.3		79-81	668648	**C0048**	
1.6-1.9-2.0		75-81	668648	**C0048**	
1.8-2.0i - 2.0 GT/E		78-88	668648	**C0048**	
1.6 N-1.6 S		->86	668651	**C0151**	
Diesel		->88	668651	**C0151**	
ASTRA F					
1.4-1.6-1.6 16V-1.7 Diesel		91->	668652	**C0050**	
1.7 Turbo Diesel		91->	668651	**C0151**	
1.7 Turbo Diesel (X17DTL)		94->	668652	**C0050**	
1.8 (C18NZ) F16-1.8 (C18NZ) F18		91->	668651	**C0151**	
1.8 (C18NZ) F15		91->	668652	**C0050**	
2.0 i GSI-2.0 GSI 16v		91->	668651	**C0151**	
ASTRA F CLASSIC					
1.4-1.6-1.6 16v		98->	668652	**C0050**	
COMMODORE B/C					
2.5-2.8		69-83	668648	**C0048**	
2.5i-2.5 S-2.5E		81-83	668648	**C0048**	
CALIBRA					
2.0 i (Mot. C20NE)		90->	90278884	**C0151**	
2.0 i 4x4		90->	90278884	**C0151**	
2.0 i 16V-2.0 i 16V 4x4		90->	668651	**C0151**	
2.5 V6		93->	668651	**C0151**	
CAMPO / BRAVA					
2.2 D-2.2 D 4x4-2.5 D-2.5 D 4x4		88-92	4293481	**C0235**	
COMMODORE B					
2.5-2.8		69-77	668648	**C0048**	
COMMODORE C					
2.5 S-2.5 E		77-82	668648	**C0048**	

REGGISPINTA DISTACCO FRIZIONE PER AUTO
CLUTCH RELEASE BEARING FOR CARS
BUTEE D'EMBRAYAGE POUR VOITURES

follows OPEL

MODELLO	DIMENSIONI	ANNO	RIF ORIGINALE	RIF CORAM	NOTE
CORSA A / NOVA					
1.0 S-1.2 N-1.2 S-1.3 N-1.3 S-1.3 i		82->	668648	**C0048**	
1.0 S (Mot. 10S)-1.2 (Mot. 12NV)		90->	668652	**C0050**	
1.2 N-1.2 S		90	668652	**C0050**	
1.3N-1.3S		90	668652	**C0050**	
1.4i-1.5 Diesel / Turbo Diesel		87-93	668652	**C0050**	
1.6i-1.6 Gsi		87-93	668652	**C0050**	
CORSA B / COMBO					
1.0 12v-1.2-1.2i 16v-1.4i		93->	668652	**C0050**	
1.4i 16v-1.7 Diesel-1.6 GSI		94->	668652	**C0050**	
1.5 Diesel/Turbo Diesel		93->	668652	**C0050**	
GT					
1.1			668636	**C0047**	
1.9			668648	**C0048**	
KADETT A / ASTRA					
1.0 NS		62-65	668636	**C0047**	
KADETT B / ASTRA					
1.0 S-1.1 N/S/SR-1.2		65-73	668636	**C0047**	
1.5-1.7-1.9		65-73	668648	**C0048**	
KADETT C / ASTRA					
1.0-1.2 N		73-79	668636	**C0047**	
1.6-1.9-1.9 Heavy Duty		73-79	668648	**C0048**	
2.0 GT/E		78-79	668648	**C0048**	
KADETT D / ASTRA / BELMONT					
1.0-1.2 N Saloon-1.2 N Estate-1.2S		79-84	668648	**C0048**	
1.3		79-84	668648	**C0048**	
1.6 Diesel		82-84	668645	**C0049**	
1.6 N/S		81-84	668645	**C0049**	
1.8 GT/E		83-84	668645	**C0049**	

REGGISPINTA DISTACCO FRIZIONE PER AUTO
CLUTCH RELEASE BEARING FOR CARS
BUTEE D'EMBRAYAGE POUR VOITURES

follows OPEL

MODELLO	DIMENSIONI	ANNO	RIF ORIGINALE	RIF CORAM	NOTE
KADETT E / ASTRA / BELMONT					
1.2 S-1.3i		84->	668648	**C0048**	
1.2 S		->92	668652	**C0050**	
1.3i		->90	668652	**C0050**	
1.3 N-1.3 S		84->	668648	**C0048**	
1.3 N-1.3 S		->90	668652	**C0050**	
1.4-1.4i		89-92	668652	**C0050**	
1.5 Turbo Diesel		88-92	668651	**C0151**	
1.6 Diesel		86-88	668652	**C0050**	
1.6 Diesel (F16 Gearbox)		84->	668645	**C0049**	
1.6 Diesel (F16 Gearbox)		->89	668651	**C0151**	
1.6 S		84-86	668645	**C0049**	
1.6 S		86-92	668652	**C0050**	
1.7 Diesel		88-92	668652	**C0050**	
1.7 Diesel (F16 Gearbox)		88-92	668651	**C0151**	
1.8 (F13 Gearbox)		86-91	668652	**C0050**	
1.8 (F16 Gearbox)		86-91	668651	**C0151**	
1.8i-1.8 GSi		84->	668645	**C0049**	
1.8i-1.8 GSi		->92	668651	**C0151**	
2.0 GSi (F13 Gearbox)		86-92	668652	**C0050**	
2.0 GSi (F16 Gearbox)-2.0 GSi 16V		86-92	668651	**C0151**	
MONZA					
2.0E-2.2E		82-87	668648	**C0048**	
2.5E		81->	668648	**C0048**	
2.8 4 Speed-2.8 5 Speed-3.0		78-81	668648	**C0048**	
2.3 Turbo Diesel		84->	668648	**C0048**	
MOVANO Chassis/Cab					
2.5 D		98-00	9162590	**C0255**	
2.8 DTI		98-01	9162590	**C0255**	
MOVANO Combi					
2.5 D		98-00	9162590	**C0255**	
2.8 DTI		98-01	9162590	**C0255**	
MOVANO Furgonato					
2.5 D		99-00	9162590	**C0255**	
2.8 DTI		99-01	9162590	**C0255**	

REGGISPINTA DISTACCO FRIZIONE PER AUTO
CLUTCH RELEASE BEARING FOR CARS
BUTEE D'EMBRAYAGE POUR VOITURES

follows OPEL

MODELLO	DIMENSIONI	ANNO	RIF ORIGINALE	RIF CORAM	NOTE
MOVANO Pianale piatto/Autotelaio					
2.5 D		98-00	9162590	**C0255**	
2.8 DTI		98-01	9162590	**C0255**	
MOVANO Ribaltabile					
2.5 D		99-00	9162590	**C0255**	
2.8 DTI		99-01	9162590	**C0255**	
MOVANO Van					
2.5 D		98-00	9162590	**C0255**	
2.8 TDI		98-01	9162590	**C0255**	
OLYMPIA A					
1.1		67-70	668636	**C0047**	
1.5-1.7-1.9		67-70	668648	**C0048**	
OMEGA A / CARLTON					
1.8-2.0		86->	668652	**C0050**	
2.3 Diesel-Turbo Diesel		86-94	668652	**C0050**	
2.4 i-2.6i		88-94	668652	**C0050**	
3.0 i 24V		89-94	668652	**C0050**	
3.0 i		86-94	668652	**C0050**	
REKORD B / CARLTON					
1.5-1.7-1.9		65-66	668648	**C0048**	
REKORD C / CARLTON					
1.5-1.7-1.9		66-71	668648	**C0048**	
2.2 (Mot. 6ZYL)		67-71	668648	**C0048**	
REKORD D / CARLTON					
1.7-1.9		72-78	668648	**C0048**	
2.0-2.1 D		72-78	668648	**C0048**	

REGGISPINTA DISTACCO FRIZIONE PER AUTO
CLUTCH RELEASE BEARING FOR CARS
BUTEE D'EMBRAYAGE POUR VOITURES

follows OPEL

MODELLO	DIMENSIONI	ANNO	RIF ORIGINALE	RIF CORAM	NOTE
REKORD E					
1.7-1.9-2.0 N		78-82	668648	**C0048**	
1.8N/S-1.8i		82-86	668648	**C0048**	
2.0S-2.0 E		78-86	668648	**C0048**	
2.0 Diesel 4 Speed		78->	668648	**C0048**	
2.0 Diesel-2.2 E		82-86	668648	**C0048**	
2.3 Diesel 4 Speed		78->	668648	**C0048**	
2.3 Turbo Diesel -Diesel 5 Speed		82-86	668648	**C0048**	
SENATOR A / ROYALE					
2.0 E 4/5 Speed-2.2 E 4/5 Speed		82-87	668648	**C0048**	
2.3 Diesel-2.3 Turbo Diesel		84-87	668648	**C0048**	
2.5 E 4/5 Speed		81->87	668648	**C0048**	
2.8 4/5 Speed		78-81	668648	**C0048**	
3.0		78-87	668648	**C0048**	
SENATOR B / ROYALE					
2.5 i		87-90	668652	**C0050**	
2.6 i		90-93	668652	**C0050**	
3.0 i 12V-3.0i 24V		87-94	668652	**C0050**	
TIGRA					
Tutti i tipi/All types/Tous types		93->	668652	**C0050**	
VECTRA A / CAVALIER					
1.4-1.6		88-96	668652	**C0050**	
1.7 Diesel		88-95	668652	**C0050**	
1.7 Turbo Diesel		92-95	668651	**C0151**	
1.8-1.8i		90-95	668651	**C0151**	
2.0i		88-95	668651	**C0151**	
2.0i 16V		88-95	668651	**C0151**	
2.0i 16V Turbo 4wd		92-95	668651	**C0151**	
2.0i V6		93-95	668651	**C0151**	
2.5 V6		93-96	668651	**C0151**	

REGGISPINTA DISTACCO FRIZIONE PER AUTO
CLUTCH RELEASE BEARING FOR CARS
BUTEE D'EMBRAYAGE POUR VOITURES

OTOSAN OTOMOBIL

MODELLO	DIMENSIONI	ANNO	RIF ORIGINALE	RIF CORAM	NOTE
ANODOL					
16		74-86	6124271	**C0104**	
TAUNUS					
1.6		86->	6124271	**C0104**	

PAYKAN

PAYKAN					
190 mm clutch			71241715	**C0153**	

PEUGEOT

104					
Tutti i tipi/All types/Tous types		72-83	2041,22	**C0046**	
106					
1.0-1.1-1.4		91->	2041,40	**C0060**	
1.3 Rallye		93->	2041,42	**C0060**	
1.4 XSI		91-94	2041,42	**C0060**	
1.4 Diesel		92-94	2041,40	**C0060**	
1.0-1.1-1.4-1.6		96->	9614677380	**C0066**	
1.5 Diesel-1.6 Rallye-1.6 GTI		97->	9614677380	**C0066**	
106 I					
1.6		93-96	9614677380	**C0066**	
1.6 (1A,1C)		94-96	46466726	**C0099**	

REGGISPINTA DISTACCO FRIZIONE PER AUTO
CLUTCH RELEASE BEARING FOR CARS
BUTEE D'EMBRAYAGE POUR VOITURES

follows PEUGEOT

MODELLO	DIMENSIONI	ANNO	RIF ORIGINALE	RIF CORAM	NOTE
106 II					
1.0 i - 1.1 i - 1.4 i - 1.5 D - 1.6 i - 1.6 S16		96->	9614677380	**C0066**	
		97->	9614677380	**C0066**	
204					
GL-Break		->66	2041,20	**C0064**	
Furgonette		->72	2041,20	**C0064**	
GL-Break		72-76	2041,25	**C0065**	
Van-Diesel		72-76	2041,26	**C0065**	
205					
1.0-1.1		83-87	2041,31	**C0046**	
1.0		87-91	2041,42	**C0060**	
1.1-1.3 Rallye		87->	2041,40	**C0060**	
1.4		83-87	2041,22	**C0046**	
1.4		87-94	2041,42	**C0060**	
1.6 GTi		84-89	2041,29	**C0059**	
1.6 GTi		89-92	2041,40	**C0060**	
1.8 Diesel-1.9 Diesel		83-89	2041,29	**C0059**	
1.1-1.3		88-89	2041,29	**C0059**	
1.8 Diesel-Turbo Diesel		89->	2041,42	**C0060**	
1.9 GTi		87-89	2041,29	**C0059**	
1.9GTi-GTi Cabriolet		89-94	2041,40	**C0060**	
205 II					
1.0		87-98	9614677380	**C0066**	
1.1		89-98	9614677380	**C0066**	
1.4		88-98	9614677380	**C0066**	
206(2A/C)					
1.1i -1.4 i -1.6 i		98->	9614677380	**C0066**	
1.6 16V		00->	9614677380	**C0066**	
1.4 HDI ECO 70 - 1.9 D (51kW)		11/01->	2041,63	**C0243**	
1.9 D		98-01	2041,63	**C0243**	
2.0 HDI 90 (66kW)		12/99->	2041;63	**C0243**	
2.0 S16 (99 kW)-2.0 S16 (110 Kw)		99->00	2041,63	**C0243**	
2.0 S16 (100KW)		00->	2041,63	**C0243**	
2.0 RC		03->	2041,63	**C0243**	
206 CABRIOLET					
1.6 16V		00->	9614677380	**C0066**	

REGGISPINTA DISTACCO FRIZIONE PER AUTO
CLUTCH RELEASE BEARING FOR CARS
BUTEE D'EMBRAYAGE POUR VOITURES

follows PEUGEOT

MODELLO	DIMENSIONI	ANNO	RIF ORIGINALE	RIF CORAM	NOTE
206 CC					
2.0 S16 (100 Kw) Cabriolet		09/00	2041,63	**C0243**	
1.6 16V - 2.0 S16 Cabriolet		00->	2041,63	**C0243**	
206 SW					
1.1 - 1.4 - 1.6 16V		02->	9614677380	**C0066**	
1.4 HDI - 1.6 16V - 2.0 16V - 2.0 HDI		02->	2041,63	**C0243**	
304					
1.3		->80	2041,25	**C0065**	
1.4		->79	2041,25	**C0065**	
1.5		79-80	2041,25	**C0065**	
305					
1.3-1.5		77-88	2041,26	**C0065**	
1.5 Diesel		78-82	2041,26	**C0065**	
1.6-18 Diesel		83-87	2041,33	**C0059**	
1.9		84-88	2041,29	**C0059**	
1.9 Diesel		82-89	2041,29	**C0059**	
306					
1.1 XN-1.4 XN-1.4i XN		93->	2041,40	**C0060**	
1.4i (Mot. TU3.2)-1.4i (TU3JP)		97->	9614677380	**C0066**	
1.4 SL - 1.8 ST - 1.9 SLD		94->	9614677380	**C0066**	
1.6 SR		94-00	9614677380	**C0066**	
1.6 SR (7B,N3,N5)		94-00	46466726	**C0099**	
1.6 SR (7A,7C,N3,N5)		93-00	46466726	**C0099**	
1.6		00->	9614677380	**C0066**	
1.8i XR-1.8 Diesel-1.9 Diesel		93->	2041,42	**C0060**	
2.0i XT-2.0 XSI Cabriolet		93->	2041,40	**C0060**	
1.6i 16v		93->	205041	**C0160**	
1.9 TD		94->	205099	**C0160**	
1.8i-1.8 Cabrio-1.8 16v-1.8 16v Cabrio		97->	2041,50	**C0066**	
2.0-2.0 Cabriolet		97->	205041	**C0160**	
1.7 Diesel-1.9 Diesel - 1.9 D		98->	9614677380	**C0066**	
306 BREAK					
1.4 - 1.8 - 1.8 16V - 1.9 D		97->	9614677380	**C0066**	SW
1.6		97->	9614677380	**C0066**	SW

REGGISPINTA DISTACCO FRIZIONE PER AUTO
CLUTCH RELEASE BEARING FOR CARS
BUTEE D'EMBRAYAGE POUR VOITURES

follows PEUGEOT

MODELLO	DIMENSIONI	ANNO	RIF ORIGINALE	RIF CORAM	NOTE
307					
2.0 HDI 90 (66kW)		08/00->	2041,63	**C0243**	
(3A/C) 1.4-1.6-2.0-2.0 HDI 90/100 FAP		08/00->	2041,63	**C0243**	
(3A/C) 1.4 16V		03->	2041,63	**C0243**	
(3A/C) 1.4 HDI		01->	2041,63	**C0243**	
(3A/C) 1.6 HDI 110 FAP		04->	2041,63	**C0243**	
307 BREAK SW					
(3E) 1.4		03->	2041,63	**C0243**	
(3E) 1.6 - 2.0 - 2.0 HDI 90		02->	2041,63	**C0243**	
(3E) 1.6 HDI 110 FAP		04->	2041,63	**C0243**	
307 CC					
(3B) 2.0 Cabriolet		03->	2041,63	**C0243**	
307 SW					
(3H) 1.4		03->	2041,63	**C0243**	
(3H) 1.6 - 2.0 - 2.0 HDI 90/110 FAP		02->	2041,63	**C0243**	
(3H) 1.6 HDI 110 FAP		04->	2041,63	**C0243**	
309					
1.1		85-89	2041,29	**C0059**	
1.1		89-92	2041,42	**C0060**	
1.3		86-89	2041,29	**C0059**	
1.3		89-91	2041,40	**C0060**	
1.4		86-89	2041,29	**C0059**	
1.4		91-93	2041,42	**C0060**	
1.6		86-89	2041,29	**C0059**	
1.6 (Cross Shaft)		89-91	2041,40	**C0060**	
1.8 Diesel-1.9 Diesel		86-89	2041,29	**C0059**	
1.8 Diesel-1.9 Diesel-1.8 Turbo Dies.		89-93	2041,40	**C0060**	
1.9 GTi		87-89	2041,29	**C0059**	
1.9 GTi		89-92	2041,42	**C0060**	
1.9 Diesel (Cross Shaft)		89-93	2041,40	**C0060**	
403					
D Avec roulement modifiè			2041,11	**C0061**	
D Avec Graphite			2041,11	**C0062**	

REGGISPINTA DISTACCO FRIZIONE PER AUTO
CLUTCH RELEASE BEARING FOR CARS
BUTEE D'EMBRAYAGE POUR VOITURES

1

follows PEUGEOT

MODELLO	DIMENSIONI	ANNO	RIF ORIGINALE	RIF CORAM	NOTE
404					
D Avec roulement modifiè			2041,11	**C0061**	
D Avec Graphite			2041,11	**C0061**	
Tutti i tipi\All types\Tous types		67-80	2041,14	**C0058**	MOD. VALEO
Tutti i tipi\All types\Tous types		67-80	2041,14	**C0068**	MOD. PEUGEOT
Cabrio-Break		67-74	2041,43	**C0069**	
405					
1.4		87-93	2041,42	**C0060**	
1.6		87-89	2041,29	**C0059**	
1.6		89-95	2041,42	**C0060**	
1.8i		92->	2041,42	**C0060**	
1.8 Turbo Diesel		88-89	2041,29	**C0059**	
1.8 Turbo Diesel		89-92	2041,40	**C0060**	
1.9		87-89	2041,29	**C0059**	
1.9		89-92	2041,42	**C0060**	
1.9 Diesel		88-89	2041,29	**C0059**	
1.9 Diesel		89->	2041,40	**C0060**	
2.0i 8V		92->	2041,42	**C0060**	
2.0i MI LE MANS		92->	205041	**C0160**	
1.9 TD - 1.9 TD BREAK		92->	205099	**C0160**	
406					
1.6		95-97	2041,42	**C0060**	
1.8i 16V		10/95->	2041,42	**C0060**	
1.6		95-04	2041,50	**C0066**	
1.8		97-04	2041,50	**C0066**	
1.8 16V		95-00	2041,50	**C0066**	
1.9 D		96-04	2041,50	**C0066**	
1.9 Turbo Diesel		95->	205099	**C0160**	
1.9 Turbo Diesel		96->	2041,40	**C0060**	
1.9 Turbo Diesel (Mot.XUD9SD,BDS)		98->	2041,50	**C0066**	
2.0i 16v		95->	205041	**C0160**	
2.0i 16v Break - 1.9 TD Break		96->	205099	**C0160**	
406(8B)					
1.8 16V - 2.0 16V (100 KW)		00-04	2041,63	**C0243**	
2.0 16V (99KW)		99-00	2041,63	**C0243**	
2.0 16V HPI (103KW)		01-04	2041,63	**C0243**	
2.0 HDI 90 (66kW)		99-04	2041,63	**C0243**	
406(8E/F)					
2.0 HDI 90 (66kW) Break		99->	2041,63	**C0243**	

REGGISPINTA DISTACCO FRIZIONE PER AUTO
CLUTCH RELEASE BEARING FOR CARS
BUTEE D'EMBRAYAGE POUR VOITURES

follows PEUGEOT

MODELLO	DIMENSIONI	ANNO	RIF ORIGINALE	RIF CORAM	NOTE
406 BREAK					
1.8		97->	2041,50	**C0066**	SW
1.8 16V - 1.9 D		96-00	2041,50	**C0066**	SW
406 BREAK (8E/F)					
1.8 16V(85KW) - 2.0 16V (100KW)		00->	2041,63	**C0243**	
2.0 16V (99KW)		99-00	2041,63	**C0243**	
2.0 16V HPI (103KW)		01->	2041,63	**C0243**	
2.0 HDI 90 (66KW)		99->	2041,63	**C0243**	
406 COUPE' (8C)					
2.0 16V (99KW)		99-00	2041,63	**C0243**	
2.0 16V (100KW)		00->	2041,63	**C0243**	
407					
1.6 HDI 110 FAP - 1.8 - 2.0 - 2.2		04->	2041,63	**C0243**	
407 SW					
1.6 HDI 110 FAP - 1.8 - 2.0 - 2.2		04->	2041,63	**C0243**	
504					
1.8 (Inc. Van e Pick-up)		68-82	2041,14	**C0058**	MOD. VALEO
1.8 (Inc. Van e Pick-up)		68-82	2041,14	**C0068**	MOD. PEUGEOT
1.8		82->	2041,43	**C0069**	
1.9 Diesel		70-81	2041,14	**C0058**	MOD. VALEO
1.9 Diesel		70-81	2041,14	**C0068**	MOD. PEUGEOT
2.0 (Inc. Van e Pick-up)		68-82	2041,14	**C0058**	MOD. VALEO
2.0 (Inc. Van e Pick-up)		68-82	2041,14	**C0068**	MOD. PEUGEOT
2.0 (Inc. Van e Pick-up)		82->	2041,43	**C0069**	
2.1 Diesel-2.3 Diesel		->81	2041,14	**C0058**	MOD. VALEO
2.1 Diesel-2.3 Diesel		->81	2041,14	**C0068**	MOD. PEUGEOT
2.3 Diesel		81-83	2041,43	**C0069**	
V6		69-74	2041,43	**C0069**	
V6		74-87	2041,14	**C0058**	MOD. VALEO
V6		74-87	2041,14	**C0068**	MOD. PEUGEOT
V6		77-84	2041,43	**C0069**	

REGGISPINTA DISTACCO FRIZIONE PER AUTO
CLUTCH RELEASE BEARING FOR CARS
BUTEE D'EMBRAYAGE POUR VOITURES

1

follows PEUGEOT

MODELLO	DIMENSIONI	ANNO	RIF ORIGINALE	RIF CORAM	NOTE
505					
1.8-2.0		79-92	2041,43	**C0069**	
2.2 GTi		83-92	2041,43	**C0069**	
2.3 Diesel		79-81	2041,14	**C0058**	MOD. VALEO
2.3 Diesel		79-81	2041,14	**C0068**	MOD. PEUGEOT
2.3 Diesel		81-84	2041,43	**C0069**	
2.3 Turbo Diesel		80-81	2041,14	**C0058**	MOD. VALEO
2.3 Turbo Diesel		80-81	2041,14	**C0068**	MOD. PEUGEOT
2.3 Turbo Diesel		81-85	2041,43	**C0069**	
2.5 Diesel-2.5 Turbo Diesel		81-92	2041,43	**C0069**	
604					
2.3 Turbo Diesel		78-81	2041,14	**C0058**	MOD. VALEO
2.3 Turbo Diesel		78-81	2041,14	**C0068**	MOD. PEUGEOT
2.3 Turbo Diesel		81-83	2041,27	**C0069**	
2.5 Turbo Diesel		83-84	2041,43	**C0069**	
2.7 Petrol		75-84	2041,14	**C0058**	MOD. VALEO
2.7 Petrol		75-84	2041,14	**C0068**	MOD. PEUGEOT
2.9 GTi Petrol		84-86	2041,14	**C0058**	MOD. VALEO
2.9 GTi Petrol		84-86	2041,14	**C0068**	MOD. PEUGEOT
605					
2.0i 8V		90-94	2041,40	**C0060**	
2.0 Turbo (Mot.XU10J2TE)		92-	2041,47	**C0236**	
2.1 Turbo Diesel		89-97	2041,47	**C0236**	
2.1 Turbo Diesel		98->	2041,47	**C0236**	
2.1 Diesel		89->	2041,40	**C0060**	
2.0i		94->	205041	**C0160**	
2.5 Turbo Diesel		94-99	2041.55	**C0250**	TRE VOLUMI
3.0 V6		89->	2041,47	**C0236**	
3.0 - 3.0 SV 24		89-99	2041.55	**C0250**	TRE VOLUMI
607					
(9D) 2.0 - 2.2 16V		00->	2041,63	**C0243**	
806					
(221) 2.0 16V		00-02	2041,63	**C0243**	
1.8-2.0		94-97	2041,42	**C0060**	
1.8-2.0		98->	2041,50	**C0066**	
1.9 Turbo Diesel		94->	2041,44	**C0237**	
2.0 Turbo		94->	2041,44	**C0237**	
2.0 Turbo-2.0 16v-2.1 Turbo Diesel		96->	2041,44	**C0237**	

REGGISPINTA DISTACCO FRIZIONE PER AUTO
CLUTCH RELEASE BEARING FOR CARS
BUTEE D'EMBRAYAGE POUR VOITURES

follows PEUGEOT

MODELLO	DIMENSIONI	ANNO	RIF ORIGINALE	RIF CORAM	NOTE
807					
(E) 2.0 - 2.2		02->	2041,63	**C0243**	
BOXER					
1.9 Diesel-1.9 Turbo Diesel		94-97	2041,47	**C0236**	
1.9 Diesel-1.9 Turbo Diesel		98->	2041,47	**C0236**	
1.9 Turbo Diesel 4x4		96->	2041,47	**C0236**	
2.0-2.0 4x4		94->	2041,47	**C0236**	
2.5 Diesel 4x4		96->	2041,47	**C0236**	
Autobus (230P) 2.0 i -2.5 D -2.5 TD		94-02	2041.55	**C0250**	
Autobus (230P) 2.5 TDI		97-02	2041.55	**C0250**	
Autobus (230P) 2.0 i 4x4		96-02	2041.55	**C0250**	
Autobus (244,Z_) 2.0 HDI		02->	2041,63	**C0243**	
Furgonato (230L) 2.0 i - 2.5 D - 2.5 TD		94-02	2041.55	**C0250**	
Furgonato (230L) 2.5 TDI		97-02	2041.55	**C0250**	
Furgonato (244) 2.0 HDI		02->	2041,63	**C0243**	
Pianale piatto/autotelaio (244) 2.0 HDI		02->	2041,63	**C0243**	
Pianale piatto/autotelaio 2.0 i -2.5 D - 2.5 TD		94-02	2041.55	**C0250**	
Pianale piatto/autotelaio 2.5 TDI		97-02	2041.55	**C0250**	
EXPERT					
1.6 Petrol-1.8 Petrol		94->	2041,42	**C0060**	
1.9 Diesel (224)		96->	2041,50	**C0066**	
Furgonato 1.9 Diesel (222)		96->	2041,50	**C0066**	
Furgonato (222) 2.0		02->	2041,63	**C0243**	
Pianate piatto/autotelaio 1.9 Diesel (223)		96->	2041,50	**C0066**	
(224) 2.0		00->	2041,63	**C0243**	
1.8 Petrol		98->	2041,50	**C0066**	
1.9 Diesel		94->	2041,42	**C0060**	
1.9 Turbo Diesel		95->	2041,44	**C0237**	
PARTNER					
1.1Petrol		96-98	2041,50	**C0066**	
1.4 Petrol 600		96->	2041,42	**C0060**	
1.8 Diesel 600		96->	2041,42	**C0060**	
1.9 Diesel 600-800		96->	2041,42	**C0060**	
1.8 Petrol		98->	2041,50	**C0066**	
1.8 Diesel		98->	2041,50	**C0066**	
1.9 Diesel		98->	2041,50	**C0066**	
combispace (5F) 1.1 - 1.4 - 1.9 D		96->	2041,50	**C0066**	
combispace (5F) 1.6 16V		01->	2041,63	**C0243**	
combispace (5F) 1.8		97->	2041,50	**C0066**	
Furgonato (5) 1.1-1.4-1.8D-1.9D		96->	2041,50	**C0066**	

REGGISPINTA DISTACCO FRIZIONE PER AUTO
CLUTCH RELEASE BEARING FOR CARS
BUTEE D'EMBRAYAGE POUR VOITURES

1

follows PEUGEOT

MODELLO	DIMENSIONI	ANNO	RIF ORIGINALE	RIF CORAM	NOTE
J5					
1.8 Petrol		81-90	2041,28	**C0045**	
2.5 Diesel		81-90	2041,28	**C0045**	
2.5 Turbo Diesel-4x4		81-90	2041,28	**C0045**	
J7					
Tutti i tipi/All types/Tous types		70-80	2041,21	**C0067**	
J9					
Tutti i tipi/All types/Tous types		80->	2041,21	**C0067**	

POLSKI

125					
P 1.3-1.5		69->	17411	**C0015**	
P 1.3-1.5		72-78	4090586	**C0008**	
P-PX 1.3-1.5		75->	4409889	**C0013**	
126					
P2-P4		72->	4304521	**C0004**	
POLONEZ					
1.2-1.2 HD		72->	4161044	**C0028**	
1.3-1.5-1.6		74-78	4161044	**C0028**	
1.3-1.5		78->	4409889	**C0013**	

REGGISPINTA DISTACCO FRIZIONE PER AUTO
CLUTCH RELEASE BEARING FOR CARS
BUTEE D'EMBRAYAGE POUR VOITURES

PORSCHE

MODELLO	DIMENSIONI	ANNO	RIF ORIGINALE	RIF CORAM	NOTE
924					
2.0		76-85	019141165	**C0076**	
356					
A Normal-A Super-B-S		50-55	111141165A	**C0075**	
BOXSTER					
2.5		96-00	01E141165AP	**C0230**	
2.7		99->	01E141165AP	**C0230**	

RELIANT

FOX					
FOX VIN		90->	6042593	**C0071**	
METROCAB					
METROCAB		86->	6157277	**C0108**	
RIALTO					
VIN		90->	6042593	**C0071**	
ROBIN					
VIN		90->	6042593	**C0071**	
SABRE / SS1					
1.3-1.4		85-90	6124270	**C0074**	
SCIMITAR					
2.8 GTC		79-90	6124270	**C0074**	
GTE		72-80	6124270	**C0074**	

REGGISPINTA DISTACCO FRIZIONE PER AUTO
CLUTCH RELEASE BEARING FOR CARS
BUTEE D'EMBRAYAGE POUR VOITURES

1

RENAULT

MODELLO	DIMENSIONI	ANNO	RIF ORIGINALE	RIF CORAM	NOTE
ALPINE					
A110 1.3		69-77	7701348231	**C0043**	
A310		71-75	7701616841	**C0043**	
A310 2.7 V6		76-80	7700588687	**C0056**	
A310 V6 2.6		84-85	7701349113	**C0040**	
CLIO					
1.1-1.2		90-95	7704001430	**C0039**	
1.2 (357,557K,Y,654K)		95->	7700102781	**C0233**	
1.4-1.7-1.8		90->	7700852719	**C0039**	
1.9 Diesel		91->	7700725237	**C0039**	
1.8 16V-1.8 RSI-2.0 16v		91->	7700725237	**C0039**	
ESPACE					
2.0 GTS-TSE-TXE		84-91	7704001363	**C0040**	
2.0i-2.1 Turbo Diesel		91->	7704001363	**C0040**	
2.0i (JEOA)		96->	7700102781	**C0233**	
2.0 TXE		87-90	7701349113	**C0040**	
2.2-2.2i-2.2 4x4		87-97	7701349113	**C0040**	
2.9 V6		91-93	7701349113	**C0040**	
ESPACE III					
2.2 12V TD		96-00	7700868591	**C0255**	
2.2 dCi		00->	7700868591	**C0255**	
EXTRA / EXPRESS / RAPID					
1.0-1.1-1.2-1.4-1.6 Diesel		85-91	7700725237	**C0039**	
1.9 Diesel		90->	7700725237	**C0039**	
EXTRA PHASE 2					
1.2-1.4-1.6 Diesel-1.9 Diesel		92->	7700725237	**C0039**	
FUEGO					
1.4		80-85	7701348231	**C0043**	
1.6 5 Speed		80-85	7701349113	**C0040**	
1.6 Except NG Gearbox		80-85	7701348537	**C0045**	
1.6 Turbo-Turbo Diesel		82-86	7704001363	**C0040**	
2.0 TX-GTX		80-85	7704001363	**C0040**	
2.1 Turbo Diesel		82-85	7704001363	**C0040**	

REGGISPINTA DISTACCO FRIZIONE PER AUTO
CLUTCH RELEASE BEARING FOR CARS
BUTEE D'EMBRAYAGE POUR VOITURES

follows RENAULT

MODELLO	DIMENSIONI	ANNO	RIF ORIGINALE	RIF CORAM	NOTE
KANGOO					
1.2-1.4		97->	7700102781	**C0233**	
1.9 Diesel		97->	7700102781	**C0233**	
LAGUNA					
1.8		94->	7700725237	**C0039**	
2.2 Dt		96-01	7700868591	**C0255**	
Grandtour 1.9 Dti		97->	7700102781	**C0233**	
Grandtour 1.9 dCi		99-01	7700868591	**C0255**	
Grandtour 2.2 Dt		96-01	7700868591	**C0255**	
Grandtour 3.0 24V		97-01	7700868591	**C0255**	
MASTER					
2.0 T30E-2.0 T35E-2.0 Minibus		80->	5000793794	**C0041**	
2.1 T30D		83-89	5000793794	**C0041**	
2.4 T35 D-2.4 D-2.4 Minibus		80->	5000793794	**C0041**	
MASTER 2					
2.0 T30-2.0 T35-2.0 Minibus		89-94	5000793794	**C0041**	
2.1 T30 D-2.3 T30-2.5 T35 D-2.5 Minibus		89-94	5000793794	**C0041**	
2.5 T35 Turbo Diesel-2.5 Minibus Turbo Diesel		89-94	5000793794	**C0041**	
MASTER 3					
2.2 T30-2.2 T35		94-97	5000793794	**C0041**	
2.5 T30 D-2.5 T35 D-2.5 Minibus		94-97	5000793794	**C0041**	
2.5 T35 Turbo Diesel-2.5 Minibus Turbo Diesel		94-97	5000793794	**C0041**	
MASTER II Autobus					
2.5 D		98-01	7700868591	**C0255**	
MASTER II Furgonato					
2.5 D		98-01	7700868591	**C0255**	
2.8 dTi		98-01	7700868591	**C0255**	
MASTER II Pianale piatto/Autotelaio					
2.5 D		98-01	7700868591	**C0255**	
2.8 dTi		98-01	7700868591	**C0255**	

REGGISPINTA DISTACCO FRIZIONE PER AUTO
CLUTCH RELEASE BEARING FOR CARS
BUTEE D'EMBRAYAGE POUR VOITURES

follows RENAULT

MODELLO	DIMENSIONI	ANNO	RIF ORIGINALE	RIF CORAM	NOTE
MASTER HECKANTRIEB					
2.0 P35		89-94	5000793794	**C0041**	
2.4 P35 D-2-4 Minibus D		81-89	5000793794	**C0041**	
MEGANE					
1.4-1.6		95->	7700102781	**C0233**	
1.9 Diesel-1.9 Turbo Diesel-1.9 Dti		95->	7700102781	**C0233**	
2.0-2.0 16v		95->	7700102781	**C0233**	
MEGANE CLASSIC					
1.4-1.6		96->	7700102781	**C0233**	
1.9 Diesel-1.9 Turbo Diesel-1.9 Dti		96->	7700102781	**C0233**	
2.0		96->	7700102781	**C0233**	
MEGANE COACH/COUPE/CABRIO					
1.6		95->	7700102781	**C0233**	
1.9 Dti		97->	7700102781	**C0233**	
2.0-2.0 16v		95->	7700102781	**C0233**	
MEGANE SCENIC					
1.4-1.6		96->	7700102781	**C0233**	
1.9 TD-1.9 Dti		97->	7700102781	**C0233**	
2.0		96->	7700102781	**C0233**	
MESSENGER					
B 80		92->	5000793794	**C0041**	
MICROBUS					
1.397 Petrol		82-86	7701348231	**C0043**	
2.086 Diesel		80->	7701349113	**C0040**	
MICROCAR					
1.397 Petrol		81-86	7701616841	**C0043**	
1.647 Petrol		81-86	7704001363	**C0040**	
2.068 Diesel		81-87	7701349113	**C0040**	

REGGISPINTA DISTACCO FRIZIONE PER AUTO
CLUTCH RELEASE BEARING FOR CARS
BUTEE D'EMBRAYAGE POUR VOITURES

follows RENAULT

MODELLO	DIMENSIONI	ANNO	RIF ORIGINALE	RIF CORAM	NOTE
MINICAR					
2.445 Diesel		82-86	7704001363	**C0040**	
R4					
Tutti i tipi/All types/Tous types		68-86	7701348231	**C0043**	
R5					
Tutti i tipi/All types/Tous types		72-84	7701616841	**C0043**	
R6					
Tutti i tipi/All types/Tous types		78-80	7701616841	**C0043**	
R8					
Tutti i tipi/All types/Tous types		67-73	7701348231	**C0043**	
R9					
Tutti i tipi/All types/Tous types		82-88	7700852719	**C0039**	
R10					
Tutti i tipi/All types/Tous types		68->	7701348231	**C0043**	
R11					
Tutti i tipi/All types/Tous types		83-89	7704001430	**C0039**	
R12					
Tutti i tipi/All types/Tous types		69-80	7701348231	**C0043**	
R14					
Tutti i tipi/All types/Tous types		76-84	7701348915	**C0046**	

REGGISPINTA DISTACCO FRIZIONE PER AUTO
CLUTCH RELEASE BEARING FOR CARS
BUTEE D'EMBRAYAGE POUR VOITURES

1

follows RENAULT

MODELLO	DIMENSIONI	ANNO	RIF ORIGINALE	RIF CORAM	NOTE
R15					
TL-GTL		71-79	7701616841	**C0043**	
TS		71-75	7701348537	**C0045**	
R16					
1.470-1.565		65-73	7700659522	**C0044**	
1.565-1.647		73-79	7701348537	**C0045**	
R17					
1.565		72-76	7701348537	**C0045**	
1.647-Gordini		76-79	7701348537	**C0045**	
R18					
1.4		78-84	7701348231	**C0043**	
1.6 NG Gearbox		78-86	7701349113	**C0040**	
1.6 Except NG Gearbox		78-86	7701348537	**C0045**	
1.6 Turbo-2.0GTX		80-86	7701349113	**C0040**	
2.1 NG Gearbox		80-86	7701349113	**C0040**	
2.1 Diesel Except NG Gearbox		80-86	7701348537	**C0045**	
2.1 Turbo Diesel		80-86	7704001363	**C0040**	
R19 (INC. CHAMADE)					
1.2-1.4		89-95	7700852719	**C0039**	
1.7 GTX-TXE-1.8 RSI		89-95	7700852719	**C0039**	
1.9 Diesel-1.9 Turbo Diesel		90->	7700852719	**C0039**	
R20					
1.6 NG Gearbox		76-80	7704001363	**C0040**	
1.6 Except NG Gearbox		76-80	7701348537	**C0045**	
2.0 NG Gearbox		77-80	7701349113	**C0040**	
2.0 Except NG Gearbox		77-80	7700588687	**C0056**	
2.1 Diesel NG Gearbox		80-84	7704001363	**C0040**	
2.1 Diesel Except NG Gearbox		80-84	7701348537	**C0045**	
2.1 Turbo Diesel		82-84	7701349113	**C0040**	
2.2 NG Gearbox		80-83	7704001363	**C0040**	
2.2 Senza NG Gearbox		80-83	7700588687	**C0056**	

REGGISPINTA DISTACCO FRIZIONE PER AUTO
CLUTCH RELEASE BEARING FOR CARS
BUTEE D'EMBRAYAGE POUR VOITURES

follows RENAULT

MODELLO	DIMENSIONI	ANNO	RIF ORIGINALE	RIF CORAM	NOTE
R21 (INC. NEVADA)					
1.4-1.6-1.7-1.9 Diesel-2.0		86-94	7700725237	**C0039**	
2.1 Diesel		86-89	7704001363	**C0040**	
2.0 4x4		89->	7701349113	**C0040**	
2.0 Turbo		87->	7704001363	**C0040**	
R25					
2.0 GTS-TX		84-92	7701349113	**C0040**	
2.0 GTX-2.165		84-89	7704001363	**C0040**	
2.2		83-92	7704001363	**C0040**	
2.1 Diesel-2.1 Turbo Diesel		83-92	7704001363	**C0040**	
R30					
2.7		75-80	7700588687	**C0056**	
2.7		81-84	7701349113	**C0040**	
Turbo Diesel		81-84	7704001363	**C0040**	
RODEO					
4		71->	7701348231	**C0043**	
5-6		79->	7701348231	**C0043**	
SAFRANE I					
2.5 Dt		92-96	7700868591	**C0255**	
SAFRANE II					
2.2 Dt		96-00	7700868591	**C0255**	
SUPERCINQUE					
Tutti i tipi/All types/Tous types		85-92	7700725237	**C0039**	
TRAFIC 4x4					
1.6-1.6 Minibus		80->	7704001363	**C0040**	
2.0-2.1-2.2		84->	7704001363	**C0040**	

REGGISPINTA DISTACCO FRIZIONE PER AUTO
CLUTCH RELEASE BEARING FOR CARS
BUTEE D'EMBRAYAGE POUR VOITURES

follows RENAULT

MODELLO	DIMENSIONI	ANNO	RIF ORIGINALE	RIF CORAM	NOTE
TRAFIC FRONTANTRIEB					
1.4-1.4 Microbus		80->	7701348231	**C0043**	
1.6-1.6 Combi-1.6 Minibus		80->	7704001363	**C0040**	
1.7-1.7 Microbus		86->	7700725237	**C0039**	
2.0-2.0 Microbus		83->	7704001363	**C0040**	
2.1 D-2.1 Minibus D		80->	7704001363	**C0040**	
2.1-2.1 Microbus		80->	7704001363	**C0040**	
TRAFIC FRONTANTRIEB 2					
1.7		89-94	7700725237	**C0039**	
2.0-2.0 Microbus-2.2-2.2 Minibus		89-94	7704001363	**C0040**	
2.1		89-94	7704001363	**C0040**	
TRAFIC FRONTANTRIEB 3					
2.2		94->	7704001363	**C0040**	
2.1 Diesel-2.5		94->	7704001363	**C0040**	
TRAFIC HECKANTRIEB					
1.4-1.4 Microcar		81->	7701348231	**C0043**	
1.6-1.6 Microcar-2.1-2.1 Microcar		80->	7704001363	**C0040**	
1.6-1.6 Microcar-2.1-2.1 Microcar		82->	7704001363	**C0040**	
1.7		86-94	7700725237	**C0039**	
2.0-2.0 Microcar-2.0 Minibus		80->	7704001363	**C0040**	
2.5		81->	7704001363	**C0040**	
TWINGO					
1.2-1.2 Easy		92->	7700852719	**C0039**	
1.2 Easy		96->	7700102781	**C0233**	

ROCSTA

JEEP					
1.8 Petrol		94->	3252695	**C0226**	
2.2 Diesel		94->	3252695	**C0226**	

REGGISPINTA DISTACCO FRIZIONE PER AUTO
CLUTCH RELEASE BEARING FOR CARS
BUTEE D'EMBRAYAGE POUR VOITURES

ROVER GROUP

MODELLO	DIMENSIONI	ANNO	RIF ORIGINALE	RIF CORAM	NOTE
ALLEGRO					
1.0		81-83	GRB 238	**C0085**	
1.1-1.3		73-83	GRB 238	**C0085**	
AMBASSADOR					
1.7-2.0		82-84	GRB 232	**C0091**	
DEFENDER					
SEE LAND ROVER					
DISCOVERY					
SEE LAND ROVER					
FREELANDER					
SEE LAND ROVER					
GT 6					
S 2500-TC 2500		74-77	GRP209	**C0235**	
LAND ROVER					
SEE LAND ROVER					
HIRE CAR					
2.5 Diesel		82->	GRP209	**C0235**	
MAESTRO					
1.3-1.3 HLE Van		83-95	GRB 527	**C0078**	
1.6 L,HL,HLS-1.6 MG		83-92	GRB 527	**C0078**	
2.0 MG-2.0 Turbo MG		84-95	GRB 243	**C0208**	
2.0 Diesel		86-95	GRB 243	**C0208**	
2.0 Turbo Diesel		91-95	GRB 243	**C0208**	

REGGISPINTA DISTACCO FRIZIONE PER AUTO
CLUTCH RELEASE BEARING FOR CARS
BUTEE D'EMBRAYAGE POUR VOITURES

1

follows ROVER GROUP

MODELLO	DIMENSIONI	ANNO	RIF ORIGINALE	RIF CORAM	NOTE
METRO A					
1.0-1.2		80-82	GRB 238	**C0085**	
1.0-1.3		82-90	GRB239	**C0090**	
Metro Van		82-94	GRB 239	**C0090**	
METRO					
1.4 Diesel		92-95	GRB 90257	**C0060**	
METRO K					
1.1-1.4 4/5 Speed		90-94	GRB 90257	**C0060**	
M.G. MAESTRO					
1.6		83-92	GRB 527	**C0078**	
2.0 EFi		84-95	GRB90258	**C0208**	
2.0 Turbo		89-95	GBR90258	**C0208**	
M.G METRO					
1.3-1.3 Turbo		82-90	GRB239	**C0090**	
M.G MONTEGO					
2.0 EFi		84-95	GRB243	**C0208**	
2.0 Turbo		85-95	GRB90258	**C0208**	
MINI					
850-1.000		69-82	GRB238	**C0085**	
1.0		82->	GRB239	**C0090**	
1.2 75 GT-Clubman & Estate		69-80	GRB238	**C0085**	
Cooper Mk 1/2/3		64-71	GRB238	**C0085**	
Cooper		90->	GRB239	**C0090**	
Mk 1/2 Van e Pick-up		->69	GRB238	**C0085**	
MONTEGO					
1.3		84-91	GRB527	**C0078**	
1.6S-VW Gearbox		84-88	GRB527	**C0078**	
1.6 S eng. Honda Gearbox		88-92	GRB90258	**C0208**	
2.0-2.0 Turbo Diesel		84-91	GRB90258	**C0208**	

REGGISPINTA DISTACCO FRIZIONE PER AUTO
CLUTCH RELEASE BEARING FOR CARS
BUTEE D'EMBRAYAGE POUR VOITURES

follows ROVER GROUP

MODELLO	DIMENSIONI	ANNO	RIF ORIGINALE	RIF CORAM	NOTE
MORRIS ITAL					
1.3-1.7		80-84	GRP209	**C0235**	
1.5 Diesel-1.8 Diesel		82-84	GRP209	**C0235**	
MORRIS MARINA					
1.3-1.7		72-80	GRP209	**C0235**	
1.5 Diesel Taxi-1.8-1.8 TC-1.8 Estate		71-78	GRP209	**C0235**	
PRINCESS 2					
1.7-2.0		78-82	GRB232	**C0091**	
2.0 Twin carb. Serie O		81-82	GRB232	**C0091**	
RANGE ROVER					
SEE LAND ROVER					
ROVER 100					
111 Cabrio		90->	GRB90257	**C0060**	
114 - 114 Cabrio		94->	GRB90257	**C0060**	
114 GT 16v- 114 Gti 16v		95->	GRB90257	**C0060**	
114 D - 115 D		95->	GRB90257	**C0060**	
ROVER 200					
213		84-90	GRB90244	**C0209**	
214 Tutti i tipi/All types/Tous types		90-94	GRB90257	**C0060**	
214 Cabriolet		92-94	GRB90257	**C0060**	
216		->89	GRB90258	**C0208**	
216 GSI-216 GTI		89-95	GRB237	**C0207**	
218 Diesel		91-94	GRB90258	**C0208**	
218 Turbo Diesel		91-94	GRB90258	**C0208**	
220 GTi (Hatchback)		91-94	GRB90258	**C0208**	
220 Turbo Coup,		92-97	GRB90258	**C0208**	
218 Vi-220 Turbo		95->	GRB90258	**C0208**	
220 D-220 SD-220 Sdi		95->	GRB90258	**C0208**	
ROVER 400					
414 Tutti i tipi/All types/Tous types		90-95	GRB90257	**C0060**	
416 GSI - 416 GTI		89-95	GRB237	**C0207**	
418 Diesel-418 Turbo Diesel		91->	GRB90258	**C0208**	
420		91-95	GRB90258	**C0208**	
418		96->	GRB90258	**C0208**	
420 Si Lux		96->	GRB90258	**C0208**	

REGGISPINTA DISTACCO FRIZIONE PER AUTO
CLUTCH RELEASE BEARING FOR CARS
BUTEE D'EMBRAYAGE POUR VOITURES

1

follows ROVER GROUP

MODELLO	DIMENSIONI	ANNO	RIF ORIGINALE	RIF CORAM	NOTE
ROVER 400 (NUOVA SERIE)					
420 Turbo-420 Diesel-420 Turbo Diesel		95->	GRB90258	**C0208**	
ROVER 400 TOURER					
1.6		94->	GRB237	**C0207**	
1.8-2.0		96->	GRB90258	**C0208**	
1.8 Turbo Diesel		93->	GRB90258	**C0208**	
ROVER 600					
620 TDi-620 Ti		94->	GRB90258	**C0208**	
ROVER 800					
820 E-SE-i-Si		86-91	GRB90258	**C0208**	
820 Turbo-Turbo Vitesse		86->	GRB90258	**C0208**	
825 Si		96->	GRB90258	**C0208**	
ROVER 2000					
2000		82->	GRP209	**C0235**	
ROVER 2300					
2300		77-87	GRP209	**C0235**	
ROVER 2400					
2400 Turbo Diesel		82-86	GRP209	**C0235**	
ROVER 2600					
2600		77-87	GRP209	**C0235**	
ROVER 3500					
3500		76-86	GRP209	**C0235**	
3500 Vitesse - 3500 S		71-86	GRP209	**C0235**	
SD1					
2.0-2.3-2.6		77-84	GRP209	**C0235**	

REGGISPINTA DISTACCO FRIZIONE PER AUTO
CLUTCH RELEASE BEARING FOR CARS
BUTEE D'EMBRAYAGE POUR VOITURES

follows ROVER GROUP

MODELLO	DIMENSIONI	ANNO	RIF ORIGINALE	RIF CORAM	NOTE
SPITFIRE					
1.2-1.3		65-74	GRP209	**C0235**	
SPRINT					
2.0		73-80	GRP209	**C0235**	
TAXI					
2.5 Diesel		82->	GRP209	**C0235**	
TR					
7 GETR.4-GANG		76-81	GRP209	**C0235**	
TRIUMPH					
1.3-1.3 TC		65-70	668636	**C0047**	
1.5		73-76	GRP209	**C0235**	
2.0		63-77	GRP209	**C0235**	
2.5		68-77	GRP209	**C0235**	
TRIUMPH DOLOMITE					
1.3		76-80	GRP209	**C0235**	
1.5		76-80	GRP209	**C0235**	
1.8		76-80	GRP209	**C0235**	
Sprint		73-80	GRP209	**C0235**	
TRIUMPH GT6					
GT6		66-73	GRP209	**C0235**	
TRIUMPH HERALD					
12/50-13/60		61-67	GRP209	**C0235**	
1.2		66-70	GRP209	**C0235**	
TRIUMPH SPITFIRE					
1.5		70-80	GRP209	**C0235**	
MK2-MK3-MK4		65-74	GRP209	**C0235**	

REGGISPINTA DISTACCO FRIZIONE PER AUTO
CLUTCH RELEASE BEARING FOR CARS
BUTEE D'EMBRAYAGE POUR VOITURES

follows ROVER GROUP

MODELLO	DIMENSIONI	ANNO	RIF ORIGINALE	RIF CORAM	NOTE
TRIUMPH TOLEDO					
1.3		70-76	GRP209	**C0235**	
TRIUMPH VITESSE					
MK1-MK2		66-71	GRP209	**C0235**	

SAAB

MODELLO	DIMENSIONI	ANNO	RIF ORIGINALE	RIF CORAM	NOTE
90					
4/5 Speed		84->	8704728	**C0166**	
93					
93			7194137	**C0075**	
95					
V4		66-78	7194137	**C0075**	
96					
96		->80	7194137	**C0075**	
V4		66-76	7194137	**C0075**	
96 GT750		->80	7194137	**C0075**	
Sport		->80	7194137	**C0075**	
99					
4/5 Speed		76-84	8704728	**C0166**	
Turbo		77-80	8704728	**C0166**	
900					
2.0 4/5 Speed		78->	8704728	**C0166**	
Turbo		78->	8704728	**C0166**	
900 (NUOVA)					
2.0 i		93->	8732232	**C0151**	
2.0 i Turbo-2.3i-2.5 V6		93->	8732232	**C0151**	

REGGISPINTA DISTACCO FRIZIONE PER AUTO
CLUTCH RELEASE BEARING FOR CARS
BUTEE D'EMBRAYAGE POUR VOITURES

SEAT

MODELLO	DIMENSIONI	ANNO	RIF ORIGINALE	RIF CORAM	NOTE
124					
1.1-1.4		69-80	4409889	**C0013**	
1.6 Sport-1.8 Sport		77-80	4409889	**C0013**	
127					
903		72-77	4439919	**C0009**	
903 4/5 Speed-1.050		77-85	XO39516640	**C0027**	
128					
1.2-1.4			XO39516630	**C0011**	
131					
1.6		75-85	FA12621603	**C0008**	
1.8 CLX		78->	4409889	**C0013**	
132					
1.6		73-83	FA12621603	**C0008**	
1.8		73-83	GE12621601	**C0014**	
133					
		74->	3309479	**C0089**	
850					
Berline		66-74	4226671	**C0006**	
ALTEA (5P1)					
1.6		04->	02T141170	**C0259**	
AROSA (6H)					
1.0		97->	002141165	**C0260**	

REGGISPINTA DISTACCO FRIZIONE PER AUTO
CLUTCH RELEASE BEARING FOR CARS
BUTEE D'EMBRAYAGE POUR VOITURES

follows SEAT

MODELLO	DIMENSIONI	ANNO	RIF ORIGINALE	RIF CORAM	NOTE
AROSA					
1.0-1.4		97->	085141165C	**C0180**	
1.4 16v		99->	085141165C	**C0180**	
1.4 TDI		99->	02A141165G	**C0181**	
1.7 SDI		97->	085141165C	**C0180**	
CORDOBA					
1.0		96->	085141165C	**C0180**	
1.2		02->	02T141170	**C0259**	
1.4 16V		02->	02T141170	**C0259**	
1.4i-1.6i		93->	085141165C	**C0180**	
1.6		03->	02T141170	**C0259**	
1.8i-1.8i 16V		93->	020141165	**C0078**	
1.8 T 20V		99->	02A141165G	**C0181**	
1.9 SDI		02->	02T141170	**C0259**	
1.9 Diesel-1.9 Turbo Diesel		93->	020141165	**C0078**	
2.0 GTi		93->	020141165	**C0078**	
1.9 Turbo Diesel		97->	02A141165G	**C0181**	
2.0 16V		96->	02A141165G	**C0181**	
CORDOBA VARIO					
1.4		96->	085141165C	**C0180**	
1.6 (Mot. AEE,ALM)		97->	085141165C	**C0180**	
1.6 (Mot.1F, ATF)		96->	020141165	**C0078**	
1.6 (Mot. AKL,APF)		99->	020141165	**C0078**	
1.9 SDI		96->	020141165	**C0078**	
1.9 TDI		96->	02A141165G	**C0181**	
FURA					
1.4		82-86	XO39516630	**C0011**	
900 GL-L 4/5 Speed		82-92	XO39516640	**C0027**	
IBIZA					
903		84-93	XO39516640	**C0027**	
1.2 -1.2 i - 1.5 - 1.5 i - 1.5 i. cat - 1.7		84-93	XO39516630	**C0011**	
1.7 Diesel		84-92	4409889	**C0013**	

REGGISPINTA DISTACCO FRIZIONE PER AUTO
CLUTCH RELEASE BEARING FOR CARS
BUTEE D'EMBRAYAGE POUR VOITURES

follows SEAT

MODELLO	DIMENSIONI	ANNO	RIF ORIGINALE	RIF CORAM	NOTE
IBIZA (NUOVA)					
1.050i-1.2i-1.3i-1.4i-1.6i		93->	085141165C/E	**C0180**	
1.6 (Mot. ABU,AEE,ALM,AKL,APF,1F,AFT)		94->	020141165	**C0078**	
1.8i-1.8i 16V		93->	020141165	**C0078**	
1.8 T 20V		99->	02A141165G	**C0181**	
1.9 Diesel-1.9 Turbo Diesel		93->	020141165	**C0078**	
1.9 TDI		96->	02A141165G	**C0181**	
2.0i Gti		93->	020141165	**C0078**	
2.0i 16v		96->	02A141165G	**C0181**	
IBIZA IV					
1.2		02->	02T141170	**C0259**	
1.4 16V		02->	02T141170	**C0259**	
1.6		03->	02T141170	**C0259**	
1.9 SDI		02->	02T141170	**C0259**	
INCA					
1.4		95->	085141165C/E	**C0180**	
1.6 (Mot. 1F)		95->	020141165	**C0078**	
1.6 (Mot. AEE)		97->	085141165C/E	**C0180**	
1.7 D		96->	020141165	**C0078**	
1.9 D-1.9 SDI		95->	020141165	**C0078**	
LEON					
1.4-1.6		99->	020141165	**C0078**	
LEON (1P1)					
1.6		05->	02T141170	**C0259**	
LEON					
1.8 20 v-1.8 T 20v		99->	02A141165G	**C0181**	
1.9 SDI		99->	020141165	**C0078**	
1.9 TDI		99->	02A141165G	**C0181**	
LEON (1P1)					
2.0 FSI		05->	02T141170	**C0259**	

REGGISPINTA DISTACCO FRIZIONE PER AUTO
CLUTCH RELEASE BEARING FOR CARS
BUTEE D'EMBRAYAGE POUR VOITURES

follows SEAT

MODELLO	DIMENSIONI	ANNO	RIF ORIGINALE	RIF CORAM	NOTE
MALAGA					
1.2 - 1.2 i.		85-92	XO39516630	**C0011**	
1.5-1.5i		85-92	XO39516630	**C0011**	
1.7 Diesel		85-92	SE22125316B	**C0106**	
MARBELLA					
850 4/5 Speed		85-92	XO39516640	**C0027**	
900 4/5 Speed		85-95	XO39516640	**C0027**	
900		96->	085141165C/E	**C0180**	
PANDA					
850-903 (34-45)		80-86	4439919	**C0009**	
RITMO					
1.5		79-82	XO39516630	**C0011**	
RONDA					
1.2-1.4-1.5		79-86	4409361	**C0010**	
1.2 (022A) - 1.5 (022A)		83-86	XO39516630	**C0011**	
1.4 (022A)		82-88	XO39516630	**C0011**	
1.6 GLX-SX-1.7 Diesel		83-86	SE022125316B	**C0106**	
2.0		83-86	FA12621603	**C0008**	
TERRA					
900 Van		83-93	SE141125316B	**C0027**	
1.3 Diesel-1.4 Diesel		90-94	085141165C	**C0180**	
TOLEDO (1L)					
1.6i-1.8i-1.8i 16V-2.0i		91->	020141165	**C0078**	
1.9 Diesel-1.9 Turbo Diesel		91->	020141165	**C0078**	
2.0 GTi 16V		94->	SE022125316B	**C0106**	
1.9 TDI		96-99	02A141165G	**C0181**	
TOLEDO (1M)					
1.4 16v-1.6		99->	020141165	**C0078**	
1.8 20v		98->	02A141165G	**C0181**	
1.9 TDI		98->	02A141165G	**C0181**	
2.3 V5		98->	02A141165G	**C0181**	
TOLEDO III (5P2)					
1.6		04->	02T141170	**C0259**	

REGGISPINTA DISTACCO FRIZIONE PER AUTO
CLUTCH RELEASE BEARING FOR CARS
BUTEE D'EMBRAYAGE POUR VOITURES

SKODA

MODELLO	DIMENSIONI	ANNO	RIF ORIGINALE	RIF CORAM	NOTE
1100					
		68-84	113152180	**C0087**	FACCIATA PIANA
		68-84	113152180	**C0088**	FACCIATA BOMBATA
ESTELLE					
105-110-120-130		85-87	113152180	**C0087**	FACCIATA PIANA
105-110-120-130		85-87	113152180	**C0088**	FACCIATA BOMBATA
FABIA					
1.0		99-02	002141170	**C0260**	
1.2		02->	02T141170	**C0259**	
1.4		00-02	002141170	**C0260**	
1.4 16V		99->	02T141170	**C0259**	
1.9 SDI		99->	02T141170	**C0259**	
1.9 TDI		00->	02A141165G	**C0181**	
2.0		99->	02T141170	**C0259**	
FABIA Combi					
1.2		03->	02T141170	**C0259**	
1.4		00->	002141170	**C0260**	
1.4 16V		03->	02T141170	**C0259**	
1.9 SDI		00->	02T141170	**C0259**	
2.0		00->	02T141170	**C0259**	
FABIA Praktik					
1.2		03->	02T141170	**C0259**	
1.9 SDI		03->	02T141170	**C0259**	
FABIA Tre Volumi					
1.2		01->	02T141170	**C0259**	
1.4		00-02	002141170	**C0260**	
1.4 16V		01->	02T141170	**C0259**	
1.9 SDI		01->	02T141170	**C0259**	
2.0		01->	02T141170	**C0259**	
FAVORIT-FAVORIT FREEWAY					
1.3		89->	969002514	**C0096**	

REGGISPINTA DISTACCO FRIZIONE PER AUTO
CLUTCH RELEASE BEARING FOR CARS
BUTEE D'EMBRAYAGE POUR VOITURES

follows SKODA

MODELLO	DIMENSIONI	ANNO	RIF ORIGINALE	RIF CORAM	NOTE
FAVORIT FREEWAY PLUS					
1.3		92->	969002514	**C0096**	
FAVORIT FORMAN					
1.3		92->	969002514	**C0096**	
FELICIA					
1.3-1.3 LX-1.3 LXi-1.3 GLXi		95->	969002514	**C0096**	
1.6		95->	969002514	**C0096**	
1.9 D		95->	969002514	**C0096**	
OCTAVIA (1U2)					
1.4		99->	002141170	**C0260**	
OCTAVIA (1Z3)					
1.4		04->	02T141170	**C0259**	
1.6		04->	02T141170	**C0259**	
1.6 FSI		04->	02T141170	**C0259**	
OCTAVIA					
1.6		96->	020141165	**C0078**	
1.8-2.0-2.0 4x4		99->	02A141165G	**C0181**	
1.9 SDI		97->	020141165	**C0078**	
1.9 TDI		96->	02A141165G	**C0181**	
1.9 TDI 4x4		99->	02A141165G	**C0181**	
OCTAVIA Combi (1Z5)					
1.6		04->	02T141170	**C0259**	
1.6 FSI		04->	02T141170	**C0259**	
RAPID					
		85-90	113152180	**C0087**	FACCIATA PIANA
		85-90	113152180	**C0088**	FACCIATA BOMBATA

REGGISPINTA DISTACCO FRIZIONE PER AUTO
CLUTCH RELEASE BEARING FOR CARS
BUTEE D'EMBRAYAGE POUR VOITURES

SSANGYONG

MODELLO	DIMENSIONI	ANNO	RIF ORIGINALE	RIF CORAM	NOTE
KORANDO					
2.0-2.3-3.2		96->	0002505215	**C0092**	
2.9 Diesel-2.9 Turbo Diesel		96->	0002505215	**C0092**	
MUSSO					
2.3		93->	0002505215	**C0092**	
2.9 Diesel-2.9 Turbo Diesel		93->	0002505215	**C0092**	

STEYR-DAIMLER-PUCH

G-CLASS					
230 G-230 GE		79-93	0002505215	**C0092**	
230 GE		90-93	0002508715	**C0095**	
230 (711)		93->	0002505215	**C0092**	
230 (717)		93->	0002508715	**C0095**	
240 GD		79-90	0002505215	**C0092**	
250 GD		88-92	0002508715	**C0095**	
250 GD (461)		90-93	0002506815	**C0093**	
280 GE		79-90	0002508715	**C0095**	
290 GD		92-93	0002508715	**C0095**	
290 Diesel		93->	0002508715	**C0095**	
300 GD		79-90	0002505215	**C0092**	

SUBARU

JUSTY I					
1.0		84-95	30508-KA001	**C0265**	
1.0 KWD		84-94	30508-KA001	**C0265**	
1.2		87-95	30508-KA001	**C0265**	
1.2 4WD		86-94	30508-KA001	**C0265**	
LIBERO Autobus					
1.0 4WD		83-87	30508-KA001	**C0265**	
1.2 4WD		86-00	30508-KA001	**C0265**	
1.2 i 4WD		91-00	30508-KA001	**C0265**	
VIVIO					
660 4WD		92-95	30508-KA001	**C0265**	

REGGISPINTA DISTACCO FRIZIONE PER AUTO
CLUTCH RELEASE BEARING FOR CARS
BUTEE D'EMBRAYAGE POUR VOITURES

SUZUKI

MODELLO	DIMENSIONI	ANNO	RIF ORIGINALE	RIF CORAM	NOTE
ALTO III					
1.0		94-02	09269-28004	**C0266**	
BALENO					
1.3 - 1.3 i 16V - 1.6 i 16V		95->	09269-28004	**C0266**	
BALENO 2 volumi					
1.3 - 1.3 i 16V - 1.6 i 16V		95->	09269-28004	**C0266**	
BALENO Station Wagon					
1.3 16V		97->	09269-28004	**C0266**	
1.6 i 16V		96->	09269-28004	**C0266**	
CAPPUCINO					
657 Turbo		93-96	90251210	**C0151**	
CARRY					
800		82->	09269-38002	**C0235**	
LJ					
LJ 80		79->	09269-38002	**C0235**	
J SERIES					
800 4wd		80-82	09269-38002	**C0235**	
1.0 4wd		82-84	09269-38002	**C0235**	
SJ					
SJ 410		81-87	09269-38002	**C0235**	
SWIFT Cabriolet					
1.3		91->	09269-28004	**C0266**	

REGGISPINTA DISTACCO FRIZIONE PER AUTO
CLUTCH RELEASE BEARING FOR CARS
BUTEE D'EMBRAYAGE POUR VOITURES

follows SUZUKI

MODELLO	DIMENSIONI	ANNO	RIF ORIGINALE	RIF CORAM	NOTE
SWIFT I (AA)					
1.0		83-89	09269-28004	**C0266**	
1.0 Turbo		85-89	09269-28004	**C0266**	
1.3		84-89	09269-28004	**C0266**	
1.3 GTI/GXI		86-89	09269-28004	**C0266**	
SWIFT II					
1.3		89-01	09269-28004	**C0266**	
SWIFT II 2 volumi					
1.0		89-01	09269-28004	**C0266**	
1.0 i		89-91	09269-28004	**C0266**	
1.3 - 1.3 GTI		89-01	09269-28004	**C0266**	
WAGON R+					
1.0		98-00	09269-28004	**C0266**	
1.2		98-00	09269-28004	**C0266**	
1.2 4WD		98-00	09269-28004	**C0266**	

TALBOT (SIMCA-CHRYSLER)

1000					
1000 (4CV)-1000 (5CV)		73-78	7701348231	**C0043**	
1005					
1005 LS-1005 GLS		77-78	7701348231	**C0043**	
1100					
1100-TI-SPEZIAL-FOURGONETTE		72->	7701348231	**C0043**	
VAN-PICK UP		75->	7701348231	**C0043**	

REGGISPINTA DISTACCO FRIZIONE PER AUTO
CLUTCH RELEASE BEARING FOR CARS
BUTEE D'EMBRAYAGE POUR VOITURES

follows TALBOT (SIMCA-CHRYSLER)

MODELLO	DIMENSIONI	ANNO	RIF ORIGINALE	RIF CORAM	NOTE
1307					
S-GLS		->79	7701348231	**C0043**	
1308					
S-GLS		->79	7701348231	**C0043**	
1510					
GL-LS-GLS		79-82	7701348231	**C0043**	
GLS		81-82	9750145080	**C0059**	
ALPINE					
1.3-1.5		76-82	7701348231	**C0043**	
1.3-1.5 (Verto clutch)		76-78	7701348231	**C0043**	
1.3-1.5		82-84	9750145080	**C0059**	
1.6		80-84	9750145080	**C0059**	
CHRYSLER					
1.307 Tutti i tipi/All types/Tous types		->79	0015796000	**C0043**	
1.308 Tutti i tipi/All types/Tous types		79-81	0015796000	**C0043**	
1.510 LS-GL-GLS		79-82	0015796000	**C0043**	
160 GT-180 2L		->70	41060200	**C0057**	
1.510 GLS-1.577		81-82	9750145080	**C0059**	
EXPRESS					
1.8 Petrol		82-90	7701348537	**C0045**	
2.0 Petrol-2.5 Diesel		82-94	7701348537	**C0045**	
2.5 Turbo Diesel		87-94	7701348537	**C0045**	
HILLMAN AVENGER					
1.250-1.3-1.5-1.6		70-77	71241715	**C0153**	
1.3-1.6		77-82	75047000	**C0074**	
HORIZON					
1.1-1.3BE1 Gearbox 4/5 Speed		82-85	9750145080	**C0059**	
1.1-1.3 Except BE1 Gearbox		77-85	7701348231	**C0043**	
1.5		79-82	7701348231	**C0043**	
1.5-1.6-1.9 Diesel		82-85	9750145080	**C0059**	

REGGISPINTA DISTACCO FRIZIONE PER AUTO
CLUTCH RELEASE BEARING FOR CARS
BUTEE D'EMBRAYAGE POUR VOITURES

follows TALBOT (SIMCA-CHRYSLER)

MODELLO	DIMENSIONI	ANNO	RIF ORIGINALE	RIF CORAM	NOTE
MATRA					
1.3 Bagheera-1.5 Bagheera		75-80	7701348231	**C0043**	
1.5 Rancho		79->	7701348231	**C0043**	
MURENA					
1.6		80-86	9750145080	**C0059**	
2.2		81-86	2041,14	**C0068**	
RANCHO					
(Borg & Beck clutch)		77-82	7701348231	**C0043**	
(Borg & Beck clutch)		82-84	9750145080	**C0059**	
(Verto clutch)		77-78	7701348231	**C0043**	
SAMBA					
Tutti i tipi/All types/Tous types		82-86	7701348915	**C0046**	
SIMCA					
1.0-1.1-1.1S		->73	2976200	**C0053**	
1.0-1.0S-1.1 Special-1.1 TI		73-78	7701348915	**C0043**	
1.005 LS-GLS		77-78	7701348915	**C0043**	
1.0 GCV-7CV		73-78	7701348915	**C0043**	
1.0 Rallye I-Rally II-Rally III		73->	7701348915	**C0043**	
SOLARA					
1.3-1.6 4 Speed		80-82	7701348915	**C0043**	
1.3-1.6 5 Speed		80-86	9750145080	**C0059**	
SUNBEAM					
1.0		77-81	75047000	**C0074**	
1.3-1.6		77-81	75047000	**C0074**	
TAGORA					
GL-GLS-SX-2.7 V6		81-84	005683500	**C0058**	VALEO
GL-GLS-SX-2.7 V6		81-84	2041,14	**C0068**	PEUGEOT

REGGISPINTA DISTACCO FRIZIONE PER AUTO
CLUTCH RELEASE BEARING FOR CARS
BUTEE D'EMBRAYAGE POUR VOITURES

1

TAXI

MODELLO	DIMENSIONI	ANNO	RIF ORIGINALE	RIF CORAM	NOTE
FX4					
FX4 RDR 2.5 Diesel		82->	09269-38002	**C0235**	

TOFAS

MODELLO	DIMENSIONI	ANNO	RIF ORIGINALE	RIF CORAM	NOTE
MURAT					
131 DOGAN		81-92	4237218	**C0013**	
131 DOGAN SL SLX		92->	3941179	**C0011**	
131 KARTAL		81->	4237218	**C0013**	
131 KARTAL SL		92->	3941179	**C0011**	
131 SAHIN		82->	4237218	**C0013**	
TEMPRA					
1.6 SX-1.6 SXAK		90->	3941179	**C0011**	
1.6 SXA		91->	3941179	**C0011**	
2.0 i.e.		92->	60806065	**C0024**	

REGGISPINTA DISTACCO FRIZIONE PER AUTO
CLUTCH RELEASE BEARING FOR CARS
BUTEE D'EMBRAYAGE POUR VOITURES

TOYOTA

MODELLO	DIMENSIONI	ANNO	RIF ORIGINALE	RIF CORAM	NOTE
4 RUNNER					
2.4 TD (66kW)		89-'95	31230-35080	**C0248**	
3.0 V6 (105 kW)		90-'95	31230-35080	**C0248**	
AVENSIS(T22)					
2.0 (94 kW)		97-'00	31230-05021	**C0247**	
2.0 TD(66 kW)		97->	31230-05021	**C0247**	
AVENSIS SW(T22)					
2.0 (94 kW)		97-'00	31230-05021	**C0247**	
2.0 TD (66 kW)		97->	31230-05021	**C0247**	
CAMRY (V1)					
2.2 (100 kW)		91-'96	31230-05021	**C0247**	
CAMRY (V20)					
2.2 (96 kW)		96-'01	31230-05021	**C0247**	
CAMRY (V2)					
2.0 (94 kW)		86-'91	31230-05021	**C0247**	
2.0 GLI 16V (89 kW)		86-'91	31230-05021	**C0247**	
2.0 Turbo DS		86-'91	31230-05021	**C0247**	
CAMRY SW (V10)					
2.2 (100 kW)		92-'96	31230-05021	**C0247**	
CAMRY SW (V2)					
2.0 (94 kW)		86-'91	31230-05021	**C0247**	
2.0 GLI 16V (89 kW)		86-'91	31230-05021	**C0247**	
2.0 Turbo DS		86-'91	31230-05021	**C0247**	
CARINA					
1.4		70-75	90363-38001	**C0235**	
1.6		70-77	90363-38001	**C0235**	

REGGISPINTA DISTACCO FRIZIONE PER AUTO
CLUTCH RELEASE BEARING FOR CARS
BUTEE D'EMBRAYAGE POUR VOITURES

follows TOYOTA

MODELLO	DIMENSIONI	ANNO	RIF ORIGINALE	RIF CORAM	NOTE
CARINA E (T19)					
2.0 D (54 kW)		92-'96	31230-05021	**C0247**	
2.0 I (93 kW)		93-'97	31230-05021	**C0247**	
2.0 GLI (98 kW)		92-'97	31230-05021	**C0247**	
2.0 GTI (116 kW)		92-'94	31230-05021	**C0247**	
2.0 GTI 16V (129 kW)		93-'97	31230-05021	**C0247**	
2.0 TD (61 kW)		96-'97	31230-05021	**C0247**	
CARINA E SW (T19)					
2.0 D (54 kW)		93-'96	31230-05021	**C0247**	
2.0 I (93 kW)		95-'97	31230-05021	**C0247**	
2.0 GLI (98 Kw)		93-'97	31230-05021	**C0247**	
2.0 TD (61 kW)		96-'97	31230-05021	**C0247**	
CARINA II					
2.0 D (54 kW)		88-'93	31230-05021	**C0247**	
2.0 GLI (98 kW)		87-'92	31230-05021	**C0247**	
CARINA II SW					
2.0 (89 kW)		87-'92	31230-05021	**C0247**	
2.0 D (54 kW)		87-'92	31230-05021	**C0247**	
CELICA					
1.6		70-77	90363-38001	**C0235**	
1.6 GT		72-77	90363-38001	**C0235**	
CELICA (T20)					
2.0i 16V (125 kW)		96-99	31230-05021	**C0247**	
2.0i 16V (125 kW) Cabriolet		96-99	31230-05021	**C0247**	
CELICA (T18)					
2.0 GTI (115 kW) Cabriolet		91-94	31230-05021	**C0247**	
COROLLA					
1.2		74-76	90363-38001	**C0235**	
1.4		70-74	90363-38001	**C0235**	
1.6		74-77	90363-38001	**C0235**	
1.6 GT		77-79	90363-38001	**C0235**	

REGGISPINTA DISTACCO FRIZIONE PER AUTO
CLUTCH RELEASE BEARING FOR CARS
BUTEE D'EMBRAYAGE POUR VOITURES

follows TOYOTA

MODELLO	DIMENSIONI	ANNO	RIF ORIGINALE	RIF CORAM	NOTE
COROLLA (E10)					
2.0 D (53 kW)		92-97	31230-05021	**C0247**	
COROLLA (E11)					
2.0 D (53 kW)		97-00	31230-05021	**C0247**	
COROLLA (E9)					
1.8 D (49 kW) - 1.8 D (47 kW)		87-93	31230-05021	**C0247**	
COROLLA COMPACT					
(E10) 2.0 D (53 kW)		92-97	31230-05021	**C0247**	
(E11) 2.0 D (53 kW)		97-00	31230-05021	**C0247**	
(E9) 1.8 D (49 kW) - 1.8 D (47 kW)		87-93	31230-05021	**C0247**	
COROLLA SW (E10)					
2.0 D (53 kW)		92-97	31230-05021	**C0247**	
COROLLA SW (E11)					
2.0 D (53 kW)		97-00	31230-05021	**C0247**	
COROLLA SW (E9)					
1.8 D (49 kW) - 1.8 D (47 kW)		87-93	31230-05021	**C0247**	
COROLLA Liftback					
(E10) 2.0 D (53 kW)		92-97	31230-05021	**C0247**	
(E11) 2.0 D (53 kW)		97-00	31230-05021	**C0247**	
(E9) 1.8 D (49 kW) - 1.8 D (47 kW)		87-93	31230-05021	**C0247**	
HIACE					
2.2 4WD		88-89	31230-35080	**C0248**	
HIACE II					
Autobus 2.4 D		84-89	31230-35080	**C0248**	
Furgonato 2.4 D		84-89	31230-35080	**C0248**	

REGGISPINTA DISTACCO FRIZIONE PER AUTO
CLUTCH RELEASE BEARING FOR CARS
BUTEE D'EMBRAYAGE POUR VOITURES

follows TOYOTA

MODELLO	DIMENSIONI	ANNO	RIF ORIGINALE	RIF CORAM	NOTE
HIACE III					
Autobus 2.4 D (57 kW)		93-95	31230-35080	**C0248**	
Autobus 2.4 D (55 kW)		89-95	31230-35080	**C0248**	
Furgonato 2.4 D (55 kW)		90-95	31230-35080	**C0248**	
HIACE IV					
Autobus 2.4 D(58 kW)		95->	31230-35080	**C0248**	
Furgonato 2.4 D (58 kW)		95->	31230-35080	**C0248**	
HILUX PICK-UP					
2.4 D (61 kW)		89->	31230-35080	**C0248**	
2.4 D (59 kW)		92->	31230-35080	**C0248**	
2.4 D (58 kW)		95->	31230-35080	**C0248**	
2.4 D 4WD		88->	31230-35080	**C0248**	
2.4i 4WD		89->	31230-35080	**C0248**	
LAND CRUISER					
2.4 (84 kW)		88-96	31230-35080	**C0248**	
2.4 TD (66 kW)		85-93	31230-35080	**C0248**	
MR 2 (W2)					
2.0 16V (129 kW)		89-00	31230-05021	**C0247**	
2.0 16V (125 kW)		89-00	31230-05021	**C0247**	
2.0 16V (115 kW)		89-00	31230-05021	**C0247**	
2.0i 16V (89 kW)		90-92	31230-05021	**C0247**	
PICNIC (XM10)					
2.0 16V (94 kW)		96->	31230-05021	**C0247**	
2.2 D (66 kW)		97->	31230-05021	**C0247**	
STARLET					
1.2		73-76	90363-38001	**C0235**	

REGGISPINTA DISTACCO FRIZIONE PER AUTO
CLUTCH RELEASE BEARING FOR CARS
BUTEE D'EMBRAYAGE POUR VOITURES

MODELLO	DIMENSIONI	ANNO	RIF ORIGINALE	RIF CORAM	NOTE
TRABANT					
P50/1-P50/2-P60-P601					
			1800011108	**C0094**	
T.V.R.					
350i					
3.5 V8 (Rover)		82->	90363-38001	**C0235**	
3.5 V8 (Rover) Heavy Duty		82->	90363-38001	**C0235**	
3000 M					
3.0 V6 (Ford)		72-81	75047000	**C0074**	
CHIMAERA					
4.0		89->	90363-38001	**C0235**	
VAUXHALL			**SEE OPEL**		

REGGISPINTA DISTACCO FRIZIONE PER AUTO
CLUTCH RELEASE BEARING FOR CARS
BUTEE D'EMBRAYAGE POUR VOITURES

1

VOLKSWAGEN

MODELLO	DIMENSIONI	ANNO	RIF ORIGINALE	RIF CORAM	NOTE
BORA					
1.4-1.6		98->	020141165A/H	**C0078**	
1.6 FSI		02->	02T141170	**C0259**	
1.8-2.0		98->	02A141165E	**C0181**	
1.9 SDI		98->	020141165A/H	**C0078**	
1.9 TDI		97->	02A141165E	**C0181**	
2.3 V5		98->	02A141165E	**C0181**	
BORA Station Wagon					
1.6 FSI		02->	02T141170	**C0259**	
CADDY					
1.5-1.6		82-83	020141165A/H	**C0078**	
1.6 Diesel		82-92	020141165A/H	**C0078**	
1.8		86-92	020141165A/H	**C0078**	
CADDY KOMBI					
1.4		95->	085141165C/E	**C0180**	
1.6 (Mot. 1F)		95-97	020141165A/H	**C0078**	
1.6		97->	085141165C/E	**C0180**	
1.7 SDI-1.9 Diesel-1.9 SDI		95->	020141165A/H	**C0078**	
1.9 TDI		96->	02A141165E	**C0181**	
CADDY PICK UP					
1.6		96->	002141165C	**C0096**	
CADDY (NEW)					
1.4		95->	085141165C/E	**C0180**	
1.6		95->	020141165A/H	**C0078**	
1.9 Diesel-1.9 SDI		95->	020141165A/H	**C0078**	
CADDY III Furgonato (2KA)					
1.4		04->	02T141170	**C0259**	
1.6		04->	02T141170	**C0259**	
2.0 SDI		04->	02T141170	**C0259**	

REGGISPINTA DISTACCO FRIZIONE PER AUTO
CLUTCH RELEASE BEARING FOR CARS
BUTEE D'EMBRAYAGE POUR VOITURES

follows VOLKSWAGEN

MODELLO	DIMENSIONI	ANNO	RIF ORIGINALE	RIF CORAM	NOTE
CADDY III Station Wagon (2KB)					
1.4		04->	02T141170	**C0259**	
1.6		04->	02T141170	**C0259**	
2.0 SDI		04->	02T141170	**C0259**	
CARAVELLE (TYPE 4)					
1.8-2.0-2.5		90->	02A141165E	**C0181**	
1.9 Diesel-1.9 Turbo Diesel		90->	02A141165E	**C0181**	
2.4 Diesel		91->	02A141165E	**C0181**	
CORRADO					
1.8 16v-1.8 G60		88-92	02A141165E	**C0181**	
2.0		92->95	02A141165E	**C0181**	
2.9 VR6		93->	02A141165E	**C0181**	
DASHER					
1.5		73-75	088141165A	**C0076**	
1.5 D-1.6 D		78-81	088141165A	**C0076**	
1.6		75-81	088141165A	**C0076**	
DERBY					
800		76-77	084141165B	**C0077**	
900		75-81	084141165B	**C0077**	
1.0		81->	084141165B	**C0077**	
1.1-1-3		74->	084141165B	**C0077**	
1.0-1.3		86->	085141165C/E	**C0180**	
GOLF (1/2 SERIE)					
1.0		83->	084141165B	**C0077**	
1.1		74-83	084141165B	**C0077**	
1.3-1.3 Cabrio		78-85	084141165B	**C0077**	
1.3		85->	085141165C/E	**C0180**	
1.5		74-83	020141165A/H	**C0078**	
1.5 Diesel		76-80	020141165A/H	**C0078**	
1.6		74-92	020141165A/H	**C0078**	
1.6 Cabrio		83-93	020141165A/H	**C0078**	
1.6 GTi		75-82	020141165A/H	**C0078**	
1.6 Diesel-1.6 Turbo Diesel		80-92	020141165A/H	**C0078**	
1.8-1.8 GTi-1.8 Syncro		82->93	020141165A/H	**C0078**	
1.8 Cabrio-1.8 GTi 16v		83-93	020141165A/H	**C0078**	
1.8 GTi G60-1.8 Rally G60		89-91	02A141165E	**C0181**	

REGGISPINTA DISTACCO FRIZIONE PER AUTO
CLUTCH RELEASE BEARING FOR CARS
BUTEE D'EMBRAYAGE POUR VOITURES

follows VOLKSWAGEN

MODELLO	DIMENSIONI	ANNO	RIF ORIGINALE	RIF CORAM	NOTE
GOLF (3 SERIE)					
1.4-1.6		91->	085141165C/E	**C0180**	
1.8-1.8 Cabrio		91->	020141165A/H	**C0078**	
1.8 Syncro		93->	02A141165E	**C0181**	
1.9 Diesel-1.9 Turbo Diesel		91->	020141165A/H	**C0078**	
1.9 Turbo Diesel 65KW		93->	02A141165E	**C0181**	
2.0 GTi		91->	020141165A/H	**C0078**	
2.0 GTi 16v		92->	02A141165E	**C0181**	
2.8 VR6-2.9 VR6 Syncro		92->	02A141165E	**C0181**	
GOLF (4 SERIE)					
1.4-1.6		97->	020141165A/H	**C0078**	
1.8-1.8 T-2.0		97->	02A141165E	**C0181**	
1.9 SDI		97->	020141165A/H	**C0078**	
1.9 TDI		97->	02A141165E	**C0181**	
2.3 V5		98->	02A141165E	**C0181**	
GOLF IV (1J1)					
1.6 FSI		02->	02T141170	**C0259**	
GOLF IV (1J1) Variant					
1.6 FSI		02->	02T141170	**C0259**	
GOLF V (1K1)					
1.4 16V		03->	02T141170	**C0259**	
1.4 FSI		03->	02T141170	**C0259**	
1.6		04->	02T141170	**C0259**	
1.6 FSI		03->	02T141170	**C0259**	
2.0 SDI		04->	02T141170	**C0259**	
GOLF V PLUS (1KP)					
1.4 16V		05->	02T141170	**C0259**	
1.6 FSI		05->	02T141170	**C0259**	
FOX (5Z1)					
1.2		05->	02T141170	**C0259**	
1.4		05->	02T141170	**C0259**	

REGGISPINTA DISTACCO FRIZIONE PER AUTO
CLUTCH RELEASE BEARING FOR CARS
BUTEE D'EMBRAYAGE POUR VOITURES

follows VOLKSWAGEN

MODELLO	DIMENSIONI	ANNO	RIF ORIGINALE	RIF CORAM	NOTE
JETTA					
1.0		83->	084141165B	**C0077**	
1.1-1.3		74-83	084141165B	**C0077**	
1.3		->85	085141165C/E	**C0180**	
1.3 Cabrio		83->	084141165B	**C0077**	
1.3		->87	085141165C/E	**C0180**	
1.5 Diesel		76-80	020141165A/H	**C0078**	
1.6-1.6 GTi		74-91	020141165A/H	**C0078**	
1.6 Diesel		80-91	020141165A/H	**C0078**	
1.6 Turbo Diesel		82-92	020141165A/H	**C0078**	
1.8 -1.8 Cabrio-1.8 Syncro-1.8 GTI		82->	020141165A/H	**C0078**	
1.8 GTI G60-1.8 Rallye G60 Syncro		89-91	085141165C/E	**C0180**	
JETTA III (1KM)					
1.6		05->	02T141170	**C0259**	
KOMBI					
1.3-1.6-1.8		70->	088141165A	**C0076**	C0076/BRASIL
Type 3 - Type 181		70->	088141165A	**C0076**	C0076/BRASIL
KARMANN GHIA					
1.2-1.5-1.6		->70	111141165A	**C0075**	
1.5-1.6		70->	088141165A	**C0076**	
LT 1 / LT VAN					
2.0		75-82	088141165A	**C0076**	
2.4		82->	088141165A	**C0076**	
2.4 D - 2.4 TD		78->	088141165A	**C0076**	
2.7 D		76-82	088141165A	**C0076**	
LUPO (6X1, 6E1)					
1.0		98->	002141165	**C0260**	
LUPO					
1.0 (Mot. AER,ALD,ALL,ANV,AUC)		98->	085141165C/E	**C0180**	
1.2 TDI		99->	085141165C/E	**C0180**	
1.4		98->	085141165C/E	**C0180**	
1.4 TDI		99->	02A141165D	**C0181**	

REGGISPINTA DISTACCO FRIZIONE PER AUTO
CLUTCH RELEASE BEARING FOR CARS
BUTEE D'EMBRAYAGE POUR VOITURES

1

follows VOLKSWAGEN

MODELLO	DIMENSIONI	ANNO	RIF ORIGINALE	RIF CORAM	NOTE
LUPO (6X1, 6E1)					
1.6 GTI		00->	02T141170	**C0259**	
LUPO					
1.7 SDI		98->	085141165C/E	**C0180**	
MAGGIOLONE / BEETLE					
1.2-1.2A		54-77	111141165A	**C0075**	
1.3-1.3A		64-70	111141165A	**C0075**	
1.3		70-75	088141165A	**C0076**	C0076/BRASIL
1.302S-1.6		70-72	088141165A	**C0076**	C0076/BRASIL
1.3 S - 1.6		72-79	088141165A	**C0076**	C0076/BRASIL
1.5-1.6		62-70	111141165A	**C0075**	
1.5-1.6		70-74	088141165A	**C0076**	C0076/BRASIL
NEW BEETLE (9C1, 1C1)					
1.4		01->	02T141170	**C0259**	
NEW BEETLE					
1.6		99->	02A141165E	**C0181**	
1.8		99->	02A141165E	**C0181**	
2.0		98->	02A141165E	**C0181**	
1.9 TDI		98->	02A141165E	**C0181**	
NEW BEETLE Cabriolet (1Y7)					
1.4		03->	02T141170	**C0259**	
PASSAT					
1.3		73-87	088141165A	**C0076**	C0076/BRASIL
1.5		73-75	088141165A	**C0076**	C0076/BRASIL
1.5 Diesel		78-80	088141165A	**C0076**	C0076/BRASIL
1.6-1.6 Diesel		76-86	088141165A	**C0076**	C0076/BRASIL
1.6 Turbo Diesel		75-88	088141165A	**C0076**	C0076/BRASIL
1.8		83-88	088141165A	**C0076**	C0076/BRASIL
1.9-2.0-2.2		81-83	088141165A	**C0076**	C0076/BRASIL
2.0		83-88	088141165A	**C0076**	C0076/BRASIL
2.2		81-88	088141165A	**C0076**	C0076/BRASIL
1.6		88-97	02A141165A	**C0181**	
1.6		97->	012141165 A-D	**C0230**	
1.6 Turbo Diesel		88-93	02A141165D	**C0181**	
1.8		88-97	02A141165E	**C0181**	

REGGISPINTA DISTACCO FRIZIONE PER AUTO
CLUTCH RELEASE BEARING FOR CARS
BUTEE D'EMBRAYAGE POUR VOITURES

follows VOLKSWAGEN

MODELLO	DIMENSIONI	ANNO	RIF ORIGINALE	RIF CORAM	NOTE
PASSAT					
1.8-1.8 T		97->	012141165 A-D	**C0230**	
1.8 Syncro		86-88	088141165A	**C0076**	
1.8 Syncro G60		89-93	02A141165D	**C0181**	
1.8 Syncro		97-99	012141165 A-D	**C0230**	
1.8 4motion		99->	012141165 A-D	**C0230**	
1.9 Diesel		89-93	02A141165A	**C0181**	
1.9 Turbo Diesel		89-97	02A141165D	**C0181**	
1.9 TDI		93-97	02A141165D	**C0181**	
1.9 TDI		97->	012141165 A-D	**C0230**	
1.9 TDI Syncro		97-99	012141165 A-D	**C0230**	
1.9 TDI 4motion		99->	012141165 A-D	**C0230**	
2.0-2.0 16V		90->	02A141165A	**C0181**	
2.0		00->	012141165 A-D	**C0230**	
2.0 Syncro		90->	02A141165E	**C0181**	
2.0 4motion		00->	012141165 A-D	**C0230**	
2.2 Syncro		84-88	088141165A	**C0076**	C0076/BRASIL
2.3 VR5		97->	012141165 A-D	**C0230**	
2.3 VR5 Syncro		97->	012141165 A-D	**C0230**	
2.3 VR5 4motion		99->	012141165 A-D	**C0230**	
2.5 TDI Syncro		99	012141165 A-D	**C0230**	
2.8 VR6		91-97	02A141165D	**C0181**	
2.8 V6 - 2.8 V6 Syncro		97->	012141165 A-D	**C0230**	
2.8 V6 4motion		99->	012141165 A-D	**C0230**	
2.9 Syncro		94->	02A141165E	**C0181**	
2.9 VR6 Syncro		94->	02A141165E	**C0181**	
PASSAT Variant (3C5)					
1.6		05->	02T141170	**C0259**	
1.6 FSI		05->	02T141170	**C0259**	
POLO					
800-900		75-81	084141165B	**C0077**	
1.0 (eng. GL,HZ)		81->	084141165B	**C0077**	
1.0 (eng. GL) ch. G17001		->86	085141165C/E	**C0180**	
1.0 (eng. HZ) ch. G17001		->92	085141165C/E	**C0180**	
1.1 (eng. HB, HC, HD)		75-83	084141165B	**C0077**	
1.3 (eng. HF, HH, HJ, HW)		76-85	084141165B	**C0077**	
1.3 (eng. GT) eng. 016143		->90	084141165B	**C0077**	
1.3 (eng. GK) ch. G015000		82->	084141165B	**C0077**	
1.3 (eng. GK) ch. G015001		->90	085141165C/E	**C0180**	
1.3 (eng. MH)		->90	085141165C/E	**C0180**	
1.3 Coupe		86-95	085141165C/E	**C0180**	
1.3 Diesel		86-90	085141165C/E	**C0180**	

REGGISPINTA DISTACCO FRIZIONE PER AUTO
CLUTCH RELEASE BEARING FOR CARS
BUTEE D'EMBRAYAGE POUR VOITURES

follows VOLKSWAGEN

MODELLO	DIMENSIONI	ANNO	RIF ORIGINALE	RIF CORAM	NOTE
POLO					
1.4 Diesel		90-95	085141165C/E	**C0180**	
1.4		95->	085141165C/E	**C0180**	
1.0		94->	085141165C/E	**C0180**	
1.3		94-95	085141165C/E	**C0180**	
1.4-1.4 16V		95->	085141165C/E	**C0180**	
1.6		94->	085141165C/E	**C0180**	
1.6		95->	020141165A/H	**C0078**	
1.6		97->	085141165C/E	**C0180**	
1.6 GTI		98->	085141165C/E	**C0180**	
1.7 SDI		97->	085141165C/E	**C0180**	
1.7 SDI (Mot. AKW)		97->	020141165A/H	**C0078**	
1.9 SDI		96->	085141165C/E	**C0180**	
1.9 SDI (AEY)		95->	020141165A/H	**C0078**	
1.9 D		94->	085141165C/E	**C0180**	
1.9 D		96	020141165A/H	**C0078**	
1.9 TDI		98->	02A141165E	**C0181**	
POLO (9N_)					
1.2		01->	02T141170	**C0259**	
1.4 16V		01->	02T141170	**C0259**	
1.4 FSI		02->	02T141170	**C0259**	
1.4 TDI		05->	02T141170	**C0259**	
1.9 SDI		01->	02T141170	**C0259**	
POLO Tre volumi					
1.4		03->	02T141170	**C0259**	
1.9 SDI		03->	02T141170	**C0259**	
QUANTUM					
1.6 TD		81->	088141165A	**C0076**	C0076/BRASIL
1.7		81-83	088141165A	**C0076**	C0076/BRASIL
1.8		83->	088141165A	**C0076**	C0076/BRASIL
2.2		82->	088141165A	**C0076**	C0076/BRASIL
RABBIT					
1.5		75-79	020141165A/H	**C0078**	
1.5 D		76-80	020141165A/H	**C0078**	
1.6		75-80	020141165A/H	**C0078**	
1.7		80->	020141165A/H	**C0078**	

REGGISPINTA DISTACCO FRIZIONE PER AUTO
CLUTCH RELEASE BEARING FOR CARS
BUTEE D'EMBRAYAGE POUR VOITURES

follows VOLKSWAGEN

MODELLO	DIMENSIONI	ANNO	RIF ORIGINALE	RIF CORAM	NOTE
RABBIT WESTMOREL					
1.5-1.6		79-80	020141165A/H	**C0078**	
1.5 D		79-80	020141165A/H	**C0078**	
1.6 PICK UP		79-80	020141165A/H	**C0078**	
1.6 D		80->	020141165A/H	**C0078**	
1.6 TD		82->	020141165A/H	**C0078**	
1.7-1.7 PICK UP		80->	020141165A/H	**C0078**	
1.8 GTI		82->	020141165A/H	**C0078**	
SANTANA					
1.3		83-84	0881411165A	**C0076**	C0076/BRASIL
1.6 Diesel		81-86	0881411165A	**C0076**	C0076/BRASIL
1.6 Turbo Diesel		82-84	0881411165A	**C0076**	C0076/BRASIL
1.8		83-84	0881411165A	**C0076**	C0076/BRASIL
1.9		81-83	0881411165A	**C0076**	C0076/BRASIL
2.0		83-84	0881411165A	**C0076**	C0076/BRASIL
SCIROCCO					
1.5-1.6-1.6 GT-1.6 GTi		74-82	020141165A/H	**C0078**	
1.8		84-92	020141165A/H	**C0078**	
1.8 GTi- 1.8 GTX 16v		82-92	020141165A/H	**C0078**	
TANSPORTER/ T4 BUS					
1.8-2.0		90->	02A141165E	**C0181**	
1.9 Diesel - 1.9 TD		90->	02A141165E	**C0181**	
2.4 Diesel-2.4 Diesel Syncro		90->	02A141165E	**C0181**	
2.5 TDI		98->	02A141165E	**C0181**	
2.5 Syncro		92->	02A141165E	**C0181**	
TARO					
2.4 D(61 kW)		89-91	J31230-35070	**C0248**	
2.4 D(59 kW)		91-94	J31230-35070	**C0248**	
2.4 D(58 kW)		94-97	J31230-35070	**C0248**	
2.4 D 4x4		94->	J31230-35070	**C0248**	
TRANSPORTER					
LT VAN					
2.0 Petrol		75-85	088141165A	**C0076**	C0076/BRASIL
2.4 Petrol		82-92	088141165A	**C0076**	C0076/BRASIL
2.4 Diesel		78-92	088141165A	**C0076**	C0076/BRASIL
2.4 Turbo Diesel		82->	088141165A	**C0076**	C0076/BRASIL
2.5 Diesel		92->	088141165A	**C0076**	C0076/BRASIL

REGGISPINTA DISTACCO FRIZIONE PER AUTO
CLUTCH RELEASE BEARING FOR CARS
BUTEE D'EMBRAYAGE POUR VOITURES

1

follows VOLKSWAGEN

MODELLO	DIMENSIONI	ANNO	RIF ORIGINALE	RIF CORAM	NOTE
TRANSPORTER					
2.7 Diesel Perkins		76-82	088141165A	**C0076**	C0076/BRASIL
TYPE 2					
1.2-1.5		63-67	111141165A	**C0075**	
1.3-1.6		71->	088141165A	**C0076**	C0076/BRASIL
1.6 Turbo Diesel		84-92	088141165A	**C0076**	C0076/BRASIL
1.7 Diesel		85-92	088141165A	**C0076**	C0076/BRASIL
1.9		87->	088141165A	**C0076**	C0076/BRASIL
2.0		75-82	088141165A	**C0076**	C0076/BRASIL
2.1		84->	088141165A	**C0076**	C0076/BRASIL
TYPE 3					
1.5		->62	111141165A	**C0075**	
1.5-1.6		62->	111141165A	**C0075**	
TOURAN					
1.6		03->	02T141170	**C0259**	
1.6 FSI		03->	02T141170	**C0259**	
1.9 TDI		03->	02A141165E	**C0181**	
VANAGON					
1.6 D		81-84	088141165A	**C0076**	C0076/BRASIL
1.9		83->	088141165A	**C0076**	C0076/BRASIL
2.0		79-82	088141165A	**C0076**	C0076/BRASIL
VENTO					
1.4-1.6		91->	085141165C/E	**C0180**	
1.4 (Mot. AEX)		95-98	020141165A/H	**C0078**	
1.6		94->	085141165C/E	**C0180**	
1.8-1.8 Cabrio		91->	020141165A/H	**C0078**	
1.8 Syncro		93->	02A141165E	**C0181**	
1.9 Diesel		91->	020141165A/H	**C0078**	
1.9 Turbo Diesel 55 Kw		91->	020141165A/H	**C0078**	
1.9 Turbo Diesel 65 Kw		93->	02A141165E	**C0181**	
2.0 GTi		91->	020141165A/H	**C0078**	
2.0 GTi 16v		92->	02A141165E	**C0181**	
2.8 VR6		92->	02A141165E	**C0181**	

REGGISPINTA DISTACCO FRIZIONE PER AUTO
CLUTCH RELEASE BEARING FOR CARS
BUTEE D'EMBRAYAGE POUR VOITURES

VOLVO

MODELLO	DIMENSIONI	ANNO	RIF ORIGINALE	RIF CORAM	NOTE
120					
		66-74	672122	**C0107**	
140					
		66-74	672122	**C0107**	
142					
		68->	672122	**C0107**	
144					
S-E-F		68->	672122	**C0107**	
145					
		72-74	672122	**C0107**	
200					
		66-74	672122	**C0107**	
242					
1.7		78-84	672122	**C0107**	
1.9		74-84	672122	**C0107**	
2.0		74-78	672122	**C0107**	
2.1		74-84	672122	**C0107**	
2.1 (USA MODEL)		78-84	672122	**C0107**	
244					
1.7		78-93	672122	**C0107**	
1.9		78-84	672122	**C0107**	
1.9 Turbo		80-84	672122	**C0107**	
2.0 Diesel		78-84	672122	**C0107**	
2.1		78-84	672122	**C0107**	
2.1 Turbo		80-84	672122	**C0107**	
2.3		79-84	672122	**C0107**	
2.1 (USA MODEL)		78-84	672122	**C0107**	

REGGISPINTA DISTACCO FRIZIONE PER AUTO
CLUTCH RELEASE BEARING FOR CARS
BUTEE D'EMBRAYAGE POUR VOITURES

1

follows VOLVO

MODELLO	DIMENSIONI	ANNO	RIF ORIGINALE	RIF CORAM	NOTE
245					
1.7-1.9		78-84	672122	**C0107**	
1.9 Turbo		81-84	672122	**C0107**	
2.1		78-84	672122	**C0107**	
2.1 Turbo		81-84	672122	**C0107**	
2.3		79-84	672122	**C0107**	
2.4 Diesel		78-84	672122	**C0107**	
2.1 (USA MODEL)		78-84	672122	**C0107**	
264/265					
2.3		79-84	672122	**C0107**	
2.4 Diesel		78-84	672122	**C0107**	
2.1 (USA MODEL)		78-84	672122	**C0107**	
340					
1.4 DL-GL-L		81-91	3209530	**C0130**	
1.6 Diesel		84-91	3293477	**C0130**	
1.7 GL-GLE		85-91	3209429	**C0131**	
343/345					
1.4 GL-GLE		78-82	3293477	**C0130**	
1.7		78-82	3411119	**C0039**	
1.9 Diesel - GSL		80->	3296487	**C0092**	
360					
2.0 GLE, GLS, GLT		82-89	3296487	**C0092**	
440					
1.6		91->	3411119	**C0039**	
1.7		88-92	3411119	**C0039**	
1.7 Turbo		88->	3411119	**C0039**	
1.8		91->	3411119	**C0039**	
1.9 Turbo Diesel		94->	3411119	**C0039**	
2.0 i		92->	3411119	**C0039**	
460					
1.6 i		93->	3411119	**C0039**	
1.7		90-92	3411119	**C0039**	
1.7 Turbo		90-95	3411119	**C0039**	
1.8		91->	3411119	**C0039**	
1.9 Turbo Diesel		94->	3411119	**C0039**	
2.0		92->	3411119	**C0039**	

REGGISPINTA DISTACCO FRIZIONE PER AUTO
CLUTCH RELEASE BEARING FOR CARS
BUTEE D'EMBRAYAGE POUR VOITURES

follows VOLVO

MODELLO	DIMENSIONI	ANNO	RIF ORIGINALE	RIF CORAM	NOTE
480					
1.7		87-92	3411119	**C0039**	
1.7 Turbo		88-95	3411119	**C0039**	
2.0		92-95	3411119	**C0039**	
740					
1.9		83-84	672122	**C0107**	
1.9 Turbo		83-84	672122	**C0107**	
2.3		83-84	672122	**C0107**	
2.3 Turbo		82-84	672122	**C0107**	
2.4 Diesel - 2.4 Turbo Diesel		82-84	672122	**C0107**	
760					
2.3 Turbo		82-84	672122	**C0107**	
2.4 Turbo Diesel		82-84	672122	**C0107**	
P					
P-1200			672122	**C0107**	
P-1300			672122	**C0107**	
P-1400		66->	672122	**C0107**	
P-2200			672122	**C0107**	
S40					
1.6-1.8-2.0		95->	30819939.7	**C0233**	
1.9 Diesel		95->	30819939.7	**C0233**	
V40					
1.6-1.8-2.0		95->	30819939.7	**C0233**	
1.9 Diesel		95->	30819939.7	**C0233**	
			238082	**C0242**	

REGGISPINTA DISTACCO FRIZIONE PER AUTO
CLUTCH RELEASE BEARING FOR CARS
BUTEE D'EMBRAYAGE POUR VOITURES

WARTBURG

MODELLO	DIMENSIONI	ANNO	RIF ORIGINALE	RIF CORAM	NOTE
353-311-312					
1.0		->85	1800493106	**C0075**	
353					
1.0		85->	1800510100	**C0165**	
352					
1.3		89->	1800510100	**C0165**	
P383					
1.0		83/85	1800510100	**C0165**	
Tourist-4 Takt-Engine VM					
1.3		89->	3533009516	**C0165**	

WOLGA

GAZ 24					
2410			4013872188130	**C0240**	
2411			4013872188130	**C0240**	
GAZ 31					
3102			4013872188130	**C0240**	
31022			4013872188130	**C0240**	
31023			4013872188130	**C0240**	
31029			4013872188130	**C0240**	
GAZ 33					
33021			4013872188130	**C0240**	

REGGISPINTA DISTACCO FRIZIONE PER AUTO
CLUTCH RELEASE BEARING FOR CARS
BUTEE D'EMBRAYAGE POUR VOITURES

YUGOCARS / ZASTAVA

MODELLO	DIMENSIONI	ANNO	RIF ORIGINALE	RIF CORAM	NOTE
0.9					
		69-> 80-92	4409361 7681283	**C0010** **C0011**	
1.1					
60 EFI (145A)		69-> 91-95	4409361 7681283	**C0010** **C0011**	
1.3					
65 EFI (145A)		69-> 91-95	4409361 7681283	**C0010** **C0011**	
45					
903		80-83	4339919	**C0009**	
45 A					
GL-GLS		83-91	7681283	**C0011**	
55					
1.116		84-91	7681283	**C0011**	
55 A					
1.116		84-91	7681283	**C0011**	
65 A					
1.298		88-91	7681283	**C0011**	
101					
1.1 1.1 SUPER 1.3		75-90 79-81 81-93	7681283 7681283 7681283	**C0011** **C0011** **C0011**	
311					
1.116		83-90	7681283	**C0011**	

REGGISPINTA DISTACCO FRIZIONE PER AUTO
CLUTCH RELEASE BEARING FOR CARS
BUTEE D'EMBRAYAGE POUR VOITURES

follows YUGOCARS / ZASTAVA

MODELLO	DIMENSIONI	ANNO	RIF ORIGINALE	RIF CORAM	NOTE
511					
1.116		83-90	7681283	**C0011**	
513					
1.301		83-88	7681283	**C0011**	
YUGO					
1.1 - 1.3		91-95	7681283	**C0011**	
YUGO FLORIDA					
1.1		89->	7681283	**C0011**	
1.3		91->	7681283	**C0011**	
1.4		88-95	7681283	**C0011**	
1.4 CAT		88->	7681283	**C0011**	
SANA					
1.400 4x4		89-92	7681283	**C0011**	
TEMPO					
0.9		91->	4339919	**C0009**	
1.1 - 1.3		91-92	7681283	**C0011**	

REGGISPINTA DISTACCO FRIZIONE PER AUTO
CLUTCH RELEASE BEARING FOR CARS
BUTEE D'EMBRAYAGE POUR VOITURES

ZAZ

MODELLO	DIMENSIONI	ANNO	RIF ORIGINALE	RIF CORAM	NOTE
VOLGA					
3-24.10			24-1601180-02	**C0228**	
3-24.11			45-43139911	**C0228**	
3-24.12			24-1601180-02	**C0228**	
3-24.13			45-43139911	**C0228**	
WOLGA GAZ 24: 24.10 -24.11			4013872188130	**C0240**	
WOLGA GAZ 31: 31.02-31.022-31.023-31.029			4013872188130	**C0240**	
WOLGA GAZ 33: 33.021			4013872188130	**C0240**	
406				**C0262**	
TAVRIA					
1.102			2451601180	**C0229**	
1.100 3 porte			2451601180	**C0229**	

REGGISPINTA DISTACCO FRIZIONE PER AUTO
CLUTCH RELEASE BEARING FOR CARS
BUTEE D'EMBRAYAGE POUR VOITURES
LISTA DI COMPARAZIONE - CROSS REFERENCES - LISTE CORRISPONDANCE

CORAM	APPLICAZIONE	ORIGINALE	SACHS	A.P BORG BECK	QH	VALEO IT	VALEO FR	SKF	LORETT	IRB	LUK	SNT
C0002	FIAT	4151164										
C0003	FIAT	4333358	1850282106	HD 1032	CCT197	R033	279793	VKC2031	CR1131		500 0020 10	370112
C0003	LANCIA	4227672	1850282106	HD 1032	CCT197	R033	279793	VKC2031	CR1131		500 0020 30	370112
C0004	AUTOBIANCHI	4304521	1850282189	HD 1212	CCT150	R177	804001	VKC2113	CR1134	229/188	500 0027 10	370220/A
C0004	AUTOBIANCHI	4438567	1850282189	HD 1212	CCT150	R177	264918	VKC2113	CR1134	229/188	500 0027 11	370220/A
C0004	FIAT	7683329	1850282189	HD 1212	CCT150	R082	262583	VKC2113	CR1134	229/188	500 0027 30	370220/A
C0004	FIAT	4438567	1850282189	HD 1212	CCT150	R082	264918	VKC2113	CR1134	229/188	500 0223 30	370220/A
C0005	FIAT	4336840	1850282049	HD 1001			277814	VKC2007	CR1133			
C0006	FIAT	4226671	1850282087	HD 1033	CCT710	R034	279795	VKC2022	CR1135		500 0022 30	370094
C0006	FIAT	4263658	1850282087	HD 1033	CCT710	R034	279795	VKC2022	CR1135		500 0357 30	370094
C0006	FIAT	4115314	1850282087	HD 1033	CCT710	R034	279795	VKC2022	CR1135		500 0022 30	370094
C0006	FIAT	5888478	1850282087	HD 1033	CCT710	R034	279795	VKC2022	CR1135		500 0357 30	370094
C0007	FIAT	832623							CR1139			370057
C0007	FIAT	816341							CR1139			370057
C0008	FIAT-POLSKI	4090586	1850282082	HD 1243			279797		CR1141	101/2		370115
C0008	SEAT	FA12621603	1850282082	HD 1243			279797		CR1141	101/2		370115
C0009	AUTOBIANCHI	4192150	1850282164	HD 1053	CCT151	R083	265254	VKC2095	CR1136	155/92	500 0028 10	370214
C0009	AUTOBIANCHI	4304832	1850282164	HD 1053	CCT151	R083	265254	VKC2095	CR1136		500 0028 10	370214
C0009	FIAT-SEAT-ZAST.	4439919	1850282164	HD 1053	CCT151	R083	265254	VKC2095	CR1136		500 0028 10	370214
C0010	FIAT	5967728	3151130241	HD 1051		R096	006764	VKC5168	CR1137		500 0202 10	370318
C0010	FIAT	5933505	3151130241	HD 1051		R096	006764	VKC5168	CR1137		500 0202 10	370318
C0010	ZASTAVA	4409361	3151130241	HD 1051		R096	006764	VKC5168	CR1137	169/113	500 0202 10	370318
C0011	ALFA	60805112	3151130141	HD 2404	CCT336	R157	279675NO	VKC2168	CR1148		500 0202 11	370336/A
C0011	ALFA	60811561	3151130241	HD 2404	CCT336	R157	264169	VKC2168	CR1148		500 0202 30	370336/A
C0011	ALFA	164001204201	3151130141	HD 2404	CCT336	R157	264170	VKC2168	CR1148		500 0409 30	370336/A
C0011	ALFA	60777605	3151130241	HD 2404	CCT336	R157	279687	VKC2168	CR1148		620 0844 00	370336/A
C0011	ALFA	7633353	3151130141	HD 2404	CCT336	R157	804002	VKC2168	CR1148		624 1424 00	370336/A
C0011	ALFA	5967728	3151130141	HD 2404	CCT336	R157	804002	VKC2168	CR1148		624 1424 00	370336/A
C0011	FIAT	4305128	3151130141	HD 2404	CCT336	R157	279675	VKV2168	CR1148		500 0202 11	370336/A
C0011	FIAT	4409362	3151130141	HD 2404	CCT336	R157	264170	VKC2168	CR1148		500 0409 30	370336/A
C0011	FIAT	46539189	3151130141	HD 2404	CCT336	R157	264170	VKC2168	CR1148		500 0409 30	370336/A
C0011	FIAT	5890368	3151130141	HD 2404	CCT336	R157	279675	VKV2168	CR1148		500 0202 11	370336/A
C0011	FIAT	5888360	3151130141	HD 2404	CCT336	R157	279675	VKV2168	CR1148		500 0202 11	370336/A
C0011	FIAT	5967726	3151130241	HD 2404	CCT336	R157	264170	VKC2168	CR1148		500 0409 30	370336/A
C0011	FIAT	7622547	3151130241	HD 2404	CCT336	R157	264170	VKC2168	CR1148		500 0409 30	370336/A
C0011	FIAT	7799778	3151130241	HD 2404	CCT336	R157	264170	VKC2168	CR1148		500 0409 30	370336/A
C0011	FIAT	4190622	3151130141	HD 2404	CCT336	R157	279675	VKV2168	CR1148		500 0202 11	370336/A
C0011	FIAT	7588805	3151130141	HD 2404	CCT336	R157	264170	VKC2168	CR1148		500 0409 30	370336/A
C0011	FIAT	7688832	3151130141	HD 2404	CCT336	R157	279675	VKV2168	CR1148		500 0202 11	370336/A
C0011	FIAT	7681283	3151130141	HD 2404	CCT336	R157	279675	VKC2168	CR1148		500 0202 11	370336/A
C0011	FIAT-LANCIA	4409361	3151130141	HD 2404	CCT336	R157	279675NO	VKC2168	CR1148		500 0202 11	370336/A
C0011	LANCIA	5888476	3151130141	HD 2404	CCT336	R157	279675	VKV2168	CR1148		500 0202 11	370336/A
C0011	SEAT	SE022125316A	3151130241	HD 2404	CCT336	R157	279675	VKV2168	CR1148		500 0202 11	370336/A
C0011	SEAT	SE021125000E	3151130141	HD 2404	CCT336	R157	279675	VKV2168	CR1148		500 0202 11	370336/A
C0011	SEAT	RF12531600	3151130141	HD 2404	CCT336	R157	279675	VKV2168	CR1148		500 0202 11	370336/A
C0011	SEAT	3941179	3151130141	HD 2404	CCT336	R157	264170	VKC2168	CR1148		500 0409 30	370336/A
C0011	SEAT	XO39516630	3151130141	HD 2404	CCT336	R157	279675NO	VKC2168	CR1148		500 0202 11	370336/A
C0011	ZASTAVA	7681283	3151130141	HD 2404	CCT336	R157	279675	VKC2168	CR1148		500 0202 11	370336/A
C0013	FIAT	4237218	1850282127	HD 1036	CCT110	R037	264315	VKC2064	CR1144	151/181	500 0179 30	370150/A
C0013	FIAT	4316750	1850282127	HD 1073	CCT110	R080	264969	VKC2064	CR1144	151/181	500 0024 30	370150/A
C0013	FIAT	4305532	1850282127	HD 1052	CCT110	R037	262828	VKC2064	CR1144	151/181	500 0021 30	370150/A
C0013	FIAT	4207838	1850282127	HD 1036	CCT110	R080	264390	VKC2064	CR1144	151/181	500 0024 10	370150/A
C0013	FIAT	4156829	1850282127	HD 1073	CCT110	R037	279792	VKC2064	CR1144	151/181	500 0179 30	370150/A
C0013	FIAT	4156828	1850282127	HD 1052	CCT110	R037	264969	VKC2064	CR1144	151/181	500 0024 30	370150/A
C0013	FIAT-POLSKI	4409889	1850282127	HD 1036	CCT110	R080	264390	VKC2064	CR1144	151/181	500 0179 30	370150/A
C0013	FIAT-SEAT	5888486	1850282127	HD 1073	CCT110	R080	264390	VKC2064	CR1144	151/181	622 0459 00	370150/A

REGGISPINTA DISTACCO FRIZIONE PER AUTO
CLUTCH RELEASE BEARING FOR CARS
BUTEE D'EMBRAYAGE POUR VOITURES
LISTA DI COMPARAZIONE - CROSS REFERENCES - LISTE CORRISPONDANCE

CORAM	APPLICAZIONE	ORIGINALE	SACHS	A.P BORG BECK	QH	VALEO IT	VALEO FR	SKF	LORETT	IRB	LUK	SNT
C0014	FIAT	4316750	1850282156	HD 1052	CCT153	R062	262828	VKC2122	CR1145	168/112		370092
C0014	FIAT	1391793	1850282156	HD 1052	CCT153	R062	262828	VKC2122	CR1145			370092
C0014	SEAT	GE12621601	1850282156	HD 1052	CCT153	R062	262828	VKC2122	CR1145			370092
C0015	POLSKI	17411										
C0017	FIAT	4136712						609553C	CR1132			190040
C0018	FIAT	5119290						609535	CR1138			
C0020	FIAT	97051536										370005/S
C0021	LADA	21011601182						VKC2248	CR1175			190030
C0022	FIAT	5950714	1850282666	HD 5164	CCT352	R146	279088		CR1151	232	500 0309 10	370319/A
C0022	FIAT	7540733	3151836001	HD 5164	CCT352	R146	282660		CR1151	232	623 0755 00	370321/A
C0022	FIAT	7540733	3151836001	HD 5164	CCT352	R146	282671		CR1151	232	623 0755 00	370319/A
C0022	FIAT	7540733	3151836001	HD 5164	CCT352	R146	801009		CR1151	232	623 0755 00	370321/A
C0022	FIAT-LANCIA	7540733	3151836001	HD 5164	CCT352	R130	279523		CR1151	232	500 0309 30	370319/A
C0023	FIAT	5954175	1850282127	HD 1036	CCT110	R080	264390	VKC2064	CR1146		500 0021 30	
C0024	ALFA	60806065	3151837002	HD 5165	CCT407	R158	279612	VKC2501	CR1149	216/179	500 0401 10	370334/A
C0024	FIAT	5888408	3151837001	HD 5165	CCT407	K135S	006809	VKC2501	CR1149	216/179	500 0401 30	370334/A
C0024	FIAT-LANCIA	7628856	3151837002	HD 5165	CCT407	R158	279612	VKC2501	CR1149	216/179	500 0401 10	370334/A
C0025	ALFA	93808387	3151065031	HD 4601	CCT332	R187	279120	VKC2170	CR1373		500 0354 30	
C0025	FIAT-IVECO	93806822	3151065031	HD 4601	CCT332	R187	279120	VKC2170	CR1373		500 0405 30	
C0025	FIAT-IVECO	93800287	3151065031	HD 4601	CCT332	R101	279120	VKC2170	CR1373		500 0429 20	
C0025	FIAT-IVECO	01904718	3151065031	HD 4601	CCT332	R187	009141	VKC2170	CR1373		627 1877 00	
C0025	FIAT-IVECO	01905318	3151065031	HD 4601	CCT332	R187	279431	VKC2170	CR1373		500 0429 20	
C0025	FIAT-IVECO	93800282	3151065031	HD 4601	CCT332	R101	009141	VKC2170	CR1373		500 0354 30	
C0025	FIAT-IVECO	01904795	3151065031	HD 4601	CCT332	R101	279120	VKC2170	CR1373		500 0405 30	
C0025	FIAT-IVECO	01908521	3151065031	HD 4601	CCT332	R187	279431	VKC2170	CR1373		500 0429 20	
C0026	FIAT-IVECO	1904749	3151213031	HD 5476		R201	801409		CR1389		500 0635 30	
C0026	FIAT-IVECO	1904797	3151213031	HD 5476		R201	801409		CR1389		500 0635 30	
C0026	FIAT-IVECO	93812488	3151213031	HD 5476		R201	806507		CR1389		500 0635 30	
C0026	FIAT-IVECO	1908520	3151213031	HD 5476		R201	801409		CR1389		500 0635 30	
C0026	FIAT-IVECO	98471635	3151213031	HD 5476		R201	806507		CR1389		500 0635 30	
C0026	FIAT-IVECO	1905290	3151213031	HD 5476		R201	806507		CR1389		500 0635 30	
C0027	FIAT	5991916	3151840001	HD 2303	CCT151	R083	279686	VKC2095	CR1106	205/168	500 0028 30	370228/A
C0027	FIAT	7662270	3151840001	HD 2303	CCT151	R083	279686	VKC2095	CR1106	205/168	500 0028 30	370228/A
C0027	FIAT	4439919	3151840001	HD 2303	CCT151	R083	279686	VKC2095	CR1106	205/168	500 0028 30	370228/A
C0027	SEAT	XO39516640	3151840001	HD 2303	CCT151	R083	279686	VKC2095	CR1106	205/168	500 0028 30	370228/A
C0027	SEAT	141125316B	3151840001	HD 2303	CCT151	R083	279686	VKC2095	CR1106	205/168	500 0028 30	370228/A
C0028	LADA	21011601185	1850282185	HD 2464	CCT269	R196	279162	VKC2248	CR1170	213/176	500 0159 30	
C0028	LADA	21011601180	1850282185	HD 2464	CCT269	R196	279162	VKC2248	CR1170	213/176	500 0319 10	
C0028	LADA	21011601182	1850282185	HD 2464	CCT269	R196	279162	VKC2248	CR1170	213/176	500 0319 10	
C0028	FIAT	4161044	1850282185	HD 2464	CCT269	R196	279162	VKC2248	CR1170	213/176	500 0319 10	
C0029	LADA	21081601180	3151821001	HD 5509	CCT329		804010	VKC2247	CR1171	214/177	500 0439 20	370930
C0029	LADA	21081601180	3151821001	HD 5509	CCT329		804010	VKC2236	CR1171	214/177	500 0638 20	370930
C0029	LADA	21081601180	3151821001	HD 5509	CCT329		804010	VKC2535	CR1171	214/177	500 0439 20	370930
C0030	FIAT	4297917	1850282605	HD 1213	CCT143	K060S	279505	VKC2976	CR1182	151/153	500 0075 30	
C0030	LANCIA	5888470	1850282605	HD 1213	CCT143	R045	279505	VKC2976	CR1182	151/153	500 0075 30	
C0030	LANCIA	82310049	1850282605	HD 1213	CCT143	R045	279505	VKC2976	CR1182	151/153	500 0075 30	
C0030	LANCIA	82314496	1850282605	HD 1213	CCT143	R045	262628	VKC2976	CR1182	151/153	500 0075 30	
C0031	LANCIA	82277893	1850282156	HD 1015		R001	264390	VKC2064				
C0032	LANCIA	82323218	1850282635	HD 2186		R061	263422	VKC2224	CR1183	199/162	500 0358 30	370942
C0032	LANCIA	82323218	1850282635	HD 2186		R061	263422	VKC2224	CR1183	199/162	500 0180 30	370942
C0035	ALFA	60516873	3151001001	HD 1003	CCT702	R041	262652JO	VKC2058	CR1101		500 0108 20	370805
C0035	ALFA	10548,12042,02	3151001001	HD 1003	CCT702	R041	358030XO	VKC2058	CR1101		500 0108 20	370805
C0035	ALFA	10548,12042,00	3151001001	HD 1003	CCT702	R041	262652	VKC2058	CR1101		500 0108 20	370805
C0036	ALFA	60581569	3151804141	HD 2341	CCT138	R111	279205GO	VKC2123	CR1103		500 0107 30	370810
C0036	ALFA	510513	3151804141	HD 2341	CCT138	R111	264218	VKC2123	CR1103		500 0107 30	370810
C0036	ALFA	530916	3151804141	HD 2341	CCT138	R111	279205GO	VKC2123	CR1103		500 0107 30	370810

REGGISPINTA DISTACCO FRIZIONE PER AUTO
CLUTCH RELEASE BEARING FOR CARS
BUTEE D'EMBRAYAGE POUR VOITURES
LISTA DI COMPARAZIONE - CROSS REFERENCES - LISTE CORRISPONDANCE

1

CORAM	APPLICAZIONE	ORIGINALE	SACHS	A.P BORG BECK	QH	VALEO IT	VALEO FR	SKF	LORETT	IRB	LUK	SNT
C0036	ALFA	60603915	3151804141	HD 2341	CCT138	R111	279205GO	VKC2123	CR1103		500 0107 30	370810
C0036	ALFA	536482	3151804141	HD 2341	CCT138	R111	279205GO	VKC2123	CR1103		500 0107 30	370810
C0036	ALFA	542684	3151804141	HD 2341	CCT138	R111	279205GO	VKC2123	CR1103		500 0107 30	370810
C0036	ALFA	60502668	3151804141	HD 2341	CCT138	R111	279205GO	VKC2123	CR1103		500 0107 30	370810
C0037	ALFA	60521134	3151010001	HD 1004	CCT296	R074	264573ZO	VKC2083	CR1102	196/159	500 0168 30	370821
C0037	ALFA	11600,12042,02	3151010001	HD 1004	CCT296	R074	263530	VKC2083	CR1102	196/159	500 0168 20	370821
C0039	RENAULT	7704001430	3151847001	HD 3990	CCT270	R107	266121	VKC2191	CR1215	176/128	500 0254 10	370507/A
C0039	RENAULT	7700852719	3151847001	HD 3990	CCT270	R107	266121	VKC2191	CR1215	176/128	500 0254 10	370507/A
C0039	RENAULT	7700869415	1850282659	HD 3990	CCT270	R186	266121	VKC2191	CR1215	176/128	500 0254 30	370507/A
C0039	RENAULT	7700725237	3151847001	HD 3990	CCT270	R164	266121	VKC2191	CR1215	176/128	500 0254 10	370507/A
C0039	RENAULT	7704001430	3151847001	HD 3990	CCT270	R107	266121	VKC2191	CR1215	176/128	500 0254 30	370507/A
C0039	VOLVO	3411119	3151847001	HD 3990	CCT270	R164	266121	VKC2191	CR1215	176/128	500 0254 10	370507/A
C0039	VOLVO	3467165	1850282659	HD 3990	CCT270	R186	266121	VKC2191	CR1215	176/128	500 0254 30	370507/A
C0040	RENAULT	7701349113	1850282654	HD 4330	CCT206	R089	265315	VKC2189	CR1214	167/131	500 0275 30	370550/A
C0040	RENAULT	7700692431	3151815001	HD 4330	CCT206	R099	265523	VKC2189	CR1214	167/131	620 0779 00	370550/A
C0040	RENAULT	7700674114	3151846001	HD 4330	CCT206	R089	801005	VKC2189	CR1214	167/131	624 0799 00	370550/A
C0040	RENAULT	7704001363	3151846001	HD 4330	CCT206	R099	265315	VKC2189	CR1214	167/131	500 0275 30	370550/A
C0040	RENAULT	7701464673	3151846001	HD 4330	CCT206	R099	265315	VKC2189	CR1214	167/131	500 0275 30	370550/A
C0041	RENAULT	5000793794	3151859001	HD 4920	CCT341	R085	279434	VKC2190	CR1235		500 0276 30	370552
C0041	RENAULT	5000404186	1850282661	HD 4920	CCT341	R227	265147	VKC2190	CR1235		622 0245 06	370552
C0041	RENAULT	5001830917	3151859001	HD 4920	CCT341	R085	801248	VKC2190	CR1235		500 0276 30	370552
C0041	RENAULT	7000736850	1850282661	HD 4920	CCT341	R227	801428	VKC2190	CR1235		622 0245 06	370552
C0041	RENAULT	7700853824	3151859001	HD 4920	CCT341	R085	801431	VKC2190	CR1235		500 0276 30	370552
C0041	RENAULT	7700736850	1850282661	HD 4920	CCT341	R227	801536	VKC2190	CR1235		622 0245 06	370552
C0041	RENAULT	7700745801	3151859001	HD 4920	CCT341	R085	804007	VKC2190	CR1235		500 0276 30	370552
C0041	RENAULT	7700300039	1850282661	HD 4920	CCT341	R227	805072	VKC2190	CR1235		622 0245 06	370552
C0043	TALBOT	0015796000	3151151141	HD 1043	CCT146	R047	79053	VKC2080	CR1222	149/80	500 0040 10	370608/A
C0043	DACIA	7700519170	3151151141	HD 1043	CCT146	R047	79053	VKC2080	CR1222	149/80	500 0040 10	370608/A
C0043	DACIA-RENAULT	7701348231	3151151141	HD 1043	CCT146	R047	79053	VKC2080	CR1222	149/80	500 0040 10	370608/A
C0043	PEUGEOT	2041,38	3151151141	HD 1043	CCT146	R038	79053	VKC2080	CR1222	149/80	500 0040 10	370608/A
C0043	RENAULT	7700519170	3151151141	HD 1043	CCT146	R047	79053	VKC2080	CR1222	149/80	500 0040 10	370608/A
C0043	RENAULT	7700519171	3151151141	HD 1043	CCT146	R047	79053	VKC2080	CR1222	149/80	500 0040 10	370608/A
C0043	RENAULT	7700638870	3151151141	HD 1043	CCT146	R038	79053	VKC2080	CR1222	149/80	500 0040 10	370608/A
C0043	RENAULT	7700676150	3151151241	HD 1043	CCT146	R047	79053	VKC2080	CR1222	149/80	500 0040 10	370608/A
C0043	RENAULT	7701616841	3151151141	HD 1043	CCT146	R047	79053	VKC2080	CR1222	149/80	500 0040 10	370608/A
C0043	RENAULT-ARO	7700638870	3151151241	HD 1043	CCT146	R038	79053	VKC2080	CR1222	149/80	500 0040 10	370608/A
C0043	TALBOT	0004023100	3151151141	HD 1043	CCT146	R038	79053	VKC2080	CR1222	149/80	500 0040 10	370608/A
C0043	TALBOT	0015796000	3151151141	HD 1043	CCT146	R038	79053	VKC2080	CR1222	149/80	500 0040 10	370608/A
C0043	TALBOT	40231D	3151151141	HD 1043	CCT146	R038	79053	VKC2080	CR1222	149/80	500 0040 10	370608/A
C0043	TALBOT	49333G	3151151141	HD 1043	CCT146	R038	79053	VKC2080	CR1222	149/80	500 0040 10	370608/A
C0045	CITROËN	96105389	1850282602	HD 1231	CCT137	R109	264630	VKC2115	CR1123	151/127	500 0099 30	370535/A
C0045	FIAT-CITROËN	95492693	1850282602	HD 1231	CCT206	R109	264630	VKC2121	CR1123	151/127	624 0224 36	370535/A
C0045	FIAT	5890224	1850282602	HD 1214	CCT206	R055	801075	VKC2121	CR1123	151/127	500 0156 30	370535/A
C0045	PEUGEOT	2041,28	1850282602	HD 1231	CCT137	R109	264630	VKC2121	CR1123	151/127	500 0099 30	370535/A
C0045	RENAULT	7700523629	1850282602	HD 1046	CCT137	R055	262433	VKC2115	CR1123	151/127	500 0099 30	370535/A
C0045	RENAULT	7700576298	1850282602	HD 1214	CCT137	R054	262869	VKC2115	CR1123	151/127	500 0099 30	370535/A
C0045	RENAULT	7700589253	1850282602	HD 1214	CCT137	R055	279611	VKC2115	CR1123	151/127	500 0156 30	370535/A
C0045	RENAULT-TALB.	7701348537	1850282602	HD 1231	CCT137	R054	264630	VKC2115	CR1123	151/127	500 0156 30	370535/A
C0046	CITROËN	7910011860CI	3151842001	HD 1244	CCT262	R076	263446	VKC2108	CR1124	176/130	500 0010 10	370548/A
C0046	CITROËN	91512268	3151842001	HD 1244	CCT262	R106	265499	VKC2108	CR1124	176/130	500 0174 30	370548/A
C0046	CITROËN	96034269	1850282628	HD 1245	CCT262	R064	266518	VKC2108	CR1124	176/130	500 0174 30	370548/A
C0046	CITROËN	91537167	3151842001	HD 1245	CCT262	R075	266518	VKC2108	CR1124	176/130	500 0174 30	370548/A
C0046	PEUGEOT	2041,22	3151842001	HD 1245	CCT262	R075	266518	VKC2108	CR1124	176/130	500 0174 30	370548/A
C0046	PEUGEOT	2041.31	1850282628	HD 1244	CCT262	R106	263446	VKC2108	CR1124	176/130	500 0010 10	370548/A
C0046	PEUGEOT	7910011860	1850282628	HD 1244	CCT262	R064	265499	VKC2108	CR1124	176/130	500 0010 10	370548/A
C0046	RENAULT	7701348915	3151842001	HD 1245	CCT262	R064	266518	VKC2108	CR1124	176/130	500 0174 30	370548/A

REGGISPINTA DISTACCO FRIZIONE PER AUTO
CLUTCH RELEASE BEARING FOR CARS
BUTEE D'EMBRAYAGE POUR VOITURES
LISTA DI COMPARAZIONE - CROSS REFERENCES - LISTE CORRISPONDANCE

CORAM	APPLICAZIONE	ORIGINALE	SACHS	A.P BORG BECK	QH	VALEO IT	VALEO FR	SKF	LORETT	IRB	LUK	SNT
C0046	RENAULT	7700625461	3151842001	HD 1244	CCT262	R076	263446	VKC2108	CR1124	176/130	500 0010 10	370548/A
C0047	OPEL	668636	3151140001	HD 3270	CCT64	R215	358239	VKC2006			500 0167 10	370400
C0047	OPEL	668631	3151140001	HD 1016	CCT64	R215	357511	VKC2006			618 1222 00	370400
C0047	OPEL	02865130	3151140001	HD 3270	CCT64	R215	358239	VKC2006			500 0167 10	370400
C0047	OPEL	08967417	3151140001	HD 1016	CCT64	R215	357511	VKC2006			618 1222 00	370400
C0047	OPEL	90002425	3151140001	HD 3270	CCT64	R215	358239	VKC2006			500 0167 10	370400
C0047	OPEL	90002479	3151140001	HD 3270	CCT64	R215	358239	VKC2006			500 0167 10	370400
C0048	BEDFORD	668635	3151089001	HD 3682	CCT105	R212	357218	VKV2186	CR1191		500 0166 10	
C0048	BEDFORD	90111364	3151089001	HD 3682	CCT105	R232	355033	VKC2186	CR1191		500 0166 10	
C0048	OPEL	668634	3151089001	HD 3682	CCT105	R212	357218	VKV2186	CR1191		500 0166 10	370411/37
C0048	OPEL	668641	3151089001	HD 3682	CCT105	R232	355033	VKC2186	CR1191		500 0166 10	370411/37
C0048	OPEL	668642	3151089001	HD 3682	CCT105	R212	357218	VKV2186	CR1191		500 0166 10	370411/37
C0048	OPEL	668648	3151089001	HD 3682	CCT105	R212	355033	VKC2186	CR1191		500 0166 10	370411/37
C0048	OPEL	90086646	3151089001	HD 3682	CCT105	R212	357218	VKV2186	CR1191		500 0166 10	370411/37
C0048	OPEL	90092811	3151089001	HD 3682	CCT105	R232	355033	VKC2186	CR1191		500 0166 10	370411/37
C0048	OPEL	90092812	3151089001	HD 3682	CCT105	R232	355033	VKC2186	CR1191		500 0166 10	370411/37
C0048	OPEL	90111364	3151089001	HD 3682	CCT105	R212	357218	VKV2186	CR1191		500 0166 10	370411/37
C0048	OPEL	90170928	3151089001	HD 3682	CCT105	R212	357218	VKV2186	CR1191		500 0166 10	370411/37
C0048	OPEL	03432373	3151089001	HD 3682	CCT105	R232	357218	VKC2186	CR1191		500 0166 10	370411/37
C0049	OPEL	668645	3151809001	HD 3880	CCT258	R213	355600	VKC2213	CR1192	200/163	500 0250 10	370415
C0049	OPEL	90112260	3151809001	HD 3880	CCT258	R213	355600	VKC2213	CR1192	200/163	500 0250 20	370415
C0049	OPEL	90129095	3151809001	HD 3880	CCT258	R213	355600	VKC2213	CR1192	200/163	500 0250 10	370415
C0049	OPEL	90129951	3151809001	HD 3880	CCT258	R213	355600	VKC2213	CR1192	200/163	500 0250 20	370415
C0050	OPEL	668652	3151175031	HD 5005	CCT314	R214	357579	VKC2215	CR1200		500 0320 10	370429
C0050	OPEL	668650	3151175031	HD 5005	CCT314	R214	804004	VKC2215	CR1200		620 0337 00	370429
C0050	OPEL	90278910	3151175031	HD 5005	CCT314	R214	357579	VKC2215	CR1200		620 1399 00	370429
C0050	OPEL	90250658	3151175031	HD 5005	CCT314	R214	804004	VKC2215	CR1200		624 0614 00	370429
C0050	OPEL	90250663	3151175031	HD 5005	CCT314	R214	804004	VKC2215	CR1200		620 0337 00	370429
C0050	OPEL	668653	3151175031	HD 5005	CCT314	R214	804004	VKC2215	CR1200		624 0614 00	370429
C0053	TALBOT	2976200	1850282123	HD 1039			275860	VKC2059				
C0056	RENAULT	7700588687	3151856001	HD 1233	CCT207	R059	279597	VKC2150	CR1216	221/184	500 0157 30	
C0056	RENAULT	7700588687RE	1850282621	HD 1233	CCT207	R059	279597	VKC2150	CR1216	221/184	500 0157 30	
C0057	TALBOT	41060200						VKC2075				
C0058	TALBOT	005683500	3515839001	HD 1050	CCT171	R168	275853	VKC2051				375310/A
C0058	PEUGEOT	2041,14	3151839001	HD 1050	CCT171	R168	275853	VKC2051		170/120		375310/A
C0059	CITROËN	97501451	1850282657	HD 3869	CCT271	R118	265172	VKC2193	CR1225	188/150	500 0225 10	370623/A
C0059	CITROËN	97501450	3151841001	HD 3869	CCT271	R086	265172	VKC2193	CR1225	188/150	622 0541 00	370623/A
C0059	CITROËN	0056670600CI	1850282657	HD 3869	CCT271	R118	265172	VKC2193	CR1125	188/150	500 0225 10	370623/A
C0059	PEUG.-CITROËN	2041,33	3151841001	HD 3869	CCT271	R129	265172	VKC2193	CR1225	188/150	500 0225 30	370623/A
C0059	PEUGEOT	2041,29	3151841001	HD 3869	CCT271	R118	265172	VKC2193	CR1225	188/150	622 0541 00	370623/A
C0059	TALBOT	9750145080	3151841001	HD 3869	CCT271	R118	265172	VKC2193	CR1225	188/150	500 0225 10	370623/A
C0059	TALBOT	0056670600	1850282657	HD 3869	CCT271	R086	265172	VKC2193	CR1225	188/150	622 0541 00	370623/A
C0060	CITROËN	2041,60	3151871001	HD 5096	CCT271	R150	804013	VKC2216	CR1128	228/186	500 0327 10	375341/A
C0060	CITROËN	96050128	3151826001	HD 5096	CCT315	R161	079937	VKC2216	CR1128	228/186	500 0327 30	375341/A
C0060	CITROËN	91537419	3151871001	HD 5096	CCT315	R161	079937	VKC2216	CR1128	228/186	500 0327 10	375341/A
C0060	CITROËN	2041,67	3151871001	HD 5096	CCT315	R161	079937	VKC2216	CR1128	228/186	500 0327 10	375341/A
C0060	FIAT	9617860880	3151826001	HD 5096	CCT315	R161	079937	VKC2216	CR1128	228/186	500 0327 10	375341/A
C0060	FIAT	96090882	3151826001	HD 5096	CCT315	R161	079937	VKC2216	CR1128	228/186	500 0327 10	375341/A
C0060	FIAT	9609088280	3151871001	HD 5096	CCT315	R161	079937	VKC2216	CR1128	228/186	500 0327 10	375341/A
C0060	PEUGEOT	2041,40	3151826001	HD 5096	CCT315	R161	279427	VKC2216	CR1128	228/186	500 0327 30	375341/A
C0060	PEUGEOT	2041,42	3151826001	HD 5096	CCT315	R161	804013	VKC2216	CR1128	228/186	500 0327 10	375341/A
C0060	PEUGEOT	2041,45	3151826001	HD 5096	CCT315	R161	079937	VKC2216	CR1128	228/186	500 0327 30	375341/A
C0060	ROVER	GRB615	3151871001	HD 5096	CCT315	R161	079937	VKC2216	CR1128	228/186	500 0327 10	375341/A
C0060	ROVER	GRB90250	3151871001	HD 5096	CCT315	R161	079937	VKC2216	CR1128	228/186	500 0327 10	375341/A
C0060	ROVER	GRB90257	3151826001	HD 5096	CCT315	R161	079937	VKC2216	CR1128	228/186	500 0327 10	375341/A
C0061	PEUGEOT	2041,11	1859102031	HD 1068		R005	271471				500 0015 30	

REGGISPINTA DISTACCO FRIZIONE PER AUTO
CLUTCH RELEASE BEARING FOR CARS
BUTEE D'EMBRAYAGE POUR VOITURES
LISTA DI COMPARAZIONE - CROSS REFERENCES - LISTE CORRISPONDANCE

1

CORAM	APPLICAZIONE	ORIGINALE	SACHS	A.P BORG BECK	QH	VALEO IT	VALEO FR	SKF	LORETT	IRB	LUK	SNT
C0061	PEUGEOT	2034,09	1859102031	HD 1049		R007	273568				500 0014 30	
C0061	PEUGEOT	2034,10	1859102031	HD 1068		R005	271471				500 0015 30	
C0062	PEUGEOT	2041,11										
C0064	PEUGEOT	2041,20	1850282141	HD 1048			275858	VKC2050				
C0065	PEUGEOT	2041,25	1850282193	HD 1216	CCT201	R048	279697	VKC2111	CR1202	201/164	500 0013 10	375328
C0065	PEUGEOT	2041,26	1850282193	HD 1216	CCT201	R048	279697	VKC2111	CR1202	201/164	620 0443 06	375328
C0065	PEUGEOT	2021,23	1850282193	HD 1216	CCT201	R048	279697	VKC2111	CR1202	201/164	500 0013 10	375328
C0066	CITROËN-PEUG.	2041,61	3151276501			R219		VKC2516	CR1150			
C0066	CITROËN-PEUG.	2041,50	3151276501	HD 5967		R219		VKC2516	CR1150			
C0066	FIAT	9614677380	3151276501	HD 7550		R219	804036	VKC2516	CR1150			
C0067	PEUGEOT	2041,21	1850282607	HD 2932	CCT321	R049	279695	VKC2146	CR1205		500 0019 10	
C0068	PEUG.-TALBOT	2041,14	3151839001	HD 1050	CCT171	R090	275853	VKC5169	CR1207	202/165	500 0017 10	375310/P
C0068	PEUGEOT	2041,30	3151839001	HD 1050	CCT171	R136	363989	VKC2051	CR1207	202/165	500 0017 11	375310/P
C0068	PEUGEOT	0056835500	1850282197	HD 3872	CCT171	R136	275853	VKC5169	CR1207	202/165	500 0017 10	375310/P
C0068	PEUGEOT	7940708649	1850282197	HD 3872	CCT171	R090	363989	VKC2051	CR1207	202/165	500 0017 11	375310/P
C0069	PEUGEOT	2041,43	3151838001	HD 4599	CCT202	R016	355078	VKC2169	CR1206	170/132	500 0245 10	375315
C0069	PEUGEOT	2041,27	3151838001	HD 4599	CCT202	R016	355078	VKC2169	CR1206	170/132	500 0510 30	375315
C0069	PEUGEOT	2041,39	1850282649	HD 4599	CCT202	R016	94230	VKC2169	CR1206	170/132	500 0245 10	375315
C0069	PEUGEOT	7940709765	1850282649	HD 4599	CCT202	R016	94230	VKC2169	CR1206	170/132	500 0245 10	375315
C0071	FORD	6042593	3151073031	HD 2034	CCT172	R066	263603	VKC2161	CR1165	167/111	500 0143 11	375453/A
C0071	FORD	1643413	3151073031	HD 2034	CCT172	R066	263603	VKC2161	CR1165	167/111	500 0143 10	375453/A
C0071	FORD	5027199	3151073031	HD 2034	CCT172	R066	263603	VKC2161	CR1165	167/111	500 0143 11	375453/A
C0071	FORD	5029564	3151073031	HD 2034	CCT172	R066	263603	VKC2161	CR1165	167/111	500 0143 10	375453/A
C0071	FORD	86AB-7548-AA	3151073031	HD 2034	CCT172	R066	263603	VKC2161	CR1165	167/111	500 0143 10	375453/A
C0071	FORD	92WX-7548-AA	3151073031	HD 2034	CCT172	R066	263603	VKC2161	CR1165	167/111	500 0143 11	375453/A
C0071	FORD	6846395	3151073031	HD 2034	CCT172	R066	263603	VKC2161	CR1165	167/111	500 0143 10	375453/A
C0071	FORD	77FB-7548-CA	3151073031	HD 2034	CCT172	R066	263603	VKC2161	CR1165	167/111	500 0143 11	375453/A
C0072	FORD	91AB7548BA	3151889001	HD 5918				VKC2548	CR1253		500 0515 10	
C0072	FORD	6546467	3151889001	HD 5918				VKC2548	CR1253		500 0515 10	
C0072	FORD	91AB7548BB	3151889001	HD 5918				VKC2548	CR1253		500 0515 10	
C0072	FORD	7166796	3151889001	HD 5918				VKC2548	CR1253		500 0515 10	
C0073	FORD	75AB7548AA	3151803003	HD 2483	CCT134		357522	VKC2163	CR1162	198/161	500 0171 10	375462
C0073	FORD	6091025	3151803003	HD 2483	CCT134		358284	VKC2163	CR1162	198/161	500 0171 10	375462
C0073	FORD	1484977	3151803003	HD 2483	CCT134		357522	VKC2163	CR1162	198/161	500 0171 10	375462
C0073	FORD	6124272	3151803003	HD 2483	CCT134		357522	VKC2163	CR1162	198/161	500 0171 10	375462
C0073	FORD	1484978	3151803003	HD 2483	CCT134		357522	VKC2163	CR1162	198/161	500 0171 10	375462
C0073	FORD	1498347	3151803003	HD 2483	CCT134		357522	VKC2163	CR1162	198/161	500 0171 10	375462
C0073	FORD	1498348	3151803003	HD 2483	CCT134		357522	VKC2163	CR1162	198/161	500 0171 10	375462
C0073	FORD	1554190	3151803003	HD 2483	CCT134		357522	VKC2163	CR1162	198/161	500 0171 10	375462
C0073	FORD	1555007	3151803003	HD 2483	CCT134		357522	VKC2163	CR1162	198/161	500 0171 10	375462
C0073	FORD	1619151	3151803003	HD 2483	CCT134		357522	VKC2163	CR1162	198/161	500 0171 10	375462
C0073	FORD	70BB-7548-LC	3151803003	HD 2483	CCT134		357522	VKC2163	CR1162	198/161	500 0171 10	375462
C0073	FORD	80AB-7548-AA	3151803003	HD 2483	CCT134		357522	VKC2163	CR1162	198/161	500 0171 10	375462
C0073	FORD	80AB-7548-AD	3151803003	HD 2483	CCT134		357522	VKC2163	CR1162	198/161	500 0171 10	375462
C0073	FORD	83BB-7548-CA	3151803003	HD 2483	CCT134		357522	VKC2163	CR1162	198/161	500 0171 10	375462
C0074	FORD	6124270	3151803001	HD 2482	CCT132	R218	358275	VKC2144	CR1161	189/151	500 0071 10	375460
C0074	FORD	1484974	3151803001	HD 2482	CCT132	R218	359227	VKC2144	CR1161	189/151	622 0568 00	375460
C0074	FORD	1484975	3151803001	HD 2482	CCT132	R218	358275	VKC2144	CR1161	189/151	500 0071 10	375460
C0074	FORD	75BB7548AA	3151803001	HD 2482	CCT132	R218	358275	VKC2144	CR1161	189/151	500 0071 10	375460
C0074	FORD	1498343	3151803001	HD 2338	CCT132	R218	801324	VKC2144	CR1161	189/151	622 0568 00	375460
C0074	FORD	1498344	3151803001	HD 2073	CCT132	R218	359227	VKC2144	CR1161	189/151	500 0071 10	375460
C0074	FORD	1498345	3151803001	HD 2037	CCT132	R218	358275	VKC2144	CR1161	189/151	622 0568 00	375460
C0074	FORD	1554189	3151803001	HD 2037	CCT132	R218	358275	VKC2144	CR1161	189/151	622 0568 00	375460
C0074	FORD	1555006	3151803001	HD 2338	CCT132	R218	801324	VKC2144	CR1161	189/151	622 0568 00	375460
C0074	FORD	5010153	3151803001	HD 2037	CCT132	R218	358275	VKC2144	CR1161	189/151	622 0568 00	375460
C0074	FORD	5021097	3151803001	HD 2338	CCT132	R218	801324	VKC2144	CR1161	189/151	622 0568 00	375460

REGGISPINTA DISTACCO FRIZIONE PER AUTO
CLUTCH RELEASE BEARING FOR CARS
BUTEE D'EMBRAYAGE POUR VOITURES
LISTA DI COMPARAZIONE - CROSS REFERENCES - LISTE CORRISPONDANCE

CORAM	APPLICAZIONE	ORIGINALE	SACHS	A.P BORG BECK	QH	VALEO IT	VALEO FR	SKF	LORETT	IRB	LUK	SNT
C0074	FORD	5021388	3151803001	HD 2037	CCT132	R218	358275	VKC2144	CR1161	189/151	622 0568 00	375460
C0074	FORD	5029582	3151803001	HD 2338	CCT132	R218	801324	VKC2144	CR1161	189/151	622 0568 00	375460
C0074	FORD	6091026	3151803001	HD 2037	CCT132	R218	358275	VKC2144	CR1161	189/151	622 0568 00	375460
C0074	FORD	80BB-7548-AA	3151803001	HD 2338	CCT132	R218	801324	VKC2144	CR1161	189/151	622 0568 00	375460
C0074	FORD	83BB-7548-AA	3151803001	HD 2037	CCT132	R218	358275	VKC2144	CR1161	189/151	622 0568 00	375460
C0074	FORD	93BX-7L596-CA	3151803001	HD 2338	CCT132	R218	801324	VKC2144	CR1161	189/151	622 0568 00	375460
C0074	TALBOT	75047000	3151803001	HD 2482	CCT132	R218	358275	VKC2144	CR1161	189/151	500 0071 10	375460
C0075	ALFA	140201204200	3159140037	HD 4621	CCT71		355544	VKC2025	CR1240		500 0132 20	370700
C0075	AUDI-VW	111141165A	3159140037	HD 4621	CCT71		355544	VKC2025	CR1240		500 0132 20	370700
C0075	AUDI-VW	111141167C	3159140037	HD 4621	CCT71		355544	VKC2025	CR1240		500 0132 20	370700
C0075	WARTBURG	180093106	3159140037	HD 4621	CCT71		355544	VKC2025	CR1240		500 0132 20	370700
C0075	SAAB	7194137	3159140037	HD 4621	CCT71		355544	VKC2025	CR1240		500 0132 20	370700
C0076	AUDI-VW	088141165A-C	3151193041	HD 1020	CCT186	R207	355538	VKC2091	CR1245	184/146	500 0146 10	370718
C0076	AUDI-VW	113141165A-D	3151193041	HD 1020	CCT186	R207	355538	VKC2091	CR1245	184/146	500 0169 10	370718
C0076	AUDI-VW	088141165A-C	3151193041	HD 1020	CCT186	R207	355538	VKC2091	CR1245	184/146	500 0172 11	370718
C0076	AUDI-VW	091141165A-D	3151193041	HD 1236	CCT186	R207	358273	VKC2091	CR1245	184/146	500 0172 10	370718
C0076	AUDI-VW	113141165A-D	3151193041	HD 1020	CCT186	R207	355538	VKC2091	CR1245	184/146	500 0172 20	370718
C0076	PORSCHE	019141165	3151193041	HD 1020	CCT186	R207	355538	VKC2091	CR1245	184/146	624 0830 00	370718
C0076	PORSCHE	113.141.165B	3151193041	HD 2209	CCT186	R207	358584	VKC2091	CR1245	184/146	624 0838 00	370718
C0077	AUDI-VW	084141165A-D	3151037131	HD 1232	CCT164	R205	355533XO	VKC2125	CR1242	185/147	500 0141 10	370722/A
C0078	AUDI-VW	020141165 B-H	3151802002	HD 2219	CCT267		355562	VKC2159	CR1244	224	500 0162 10	370726
C0078	ROVER	GRB527	3151802003	HD 4567	CCT267		355562	VKC2159	CR1244	224	500 0249 11	370726
C0078	ROVER	GRB240	3151802003	HD 4567	CCT267		355562	VKC2159	CR1244	224	621 1344 09	370726
C0078	SEAT	020141165	3151802003	HD 4567	CCT267		355562	VKC2195	CR1244	224	621 1346 09	370726
C0078	VW	020141165A/H	3151802003	HD 4567	CCT267		355562	VKC2195	CR1244	224	500 0249 11	370726
C0079	CITROËN	95494929	1850282663	HD 3831	CCT291	R108	266402	VKC2196	CR1126	187/149	500 0286 30	
C0080	CITROËN	AM31401C	1850282143	HD 1066	CCT145	R017	275854	VKC2054	CR1120		500 0095 10	375624
C0080	CITROËN	95616712	1850282143	HD 1066	CCT145	R017	275854	VKC2054	CR1120		500 0095 10	375624
C0081	CITROËN	5478534	3151848001	HD 1215	CCT167	R051	266155	VKC2114	CR1121		500 0097 10	
C0081	CITROËN	95577787	3151848001	HD 1215	CCT167	R051	266155	VKC2114	CR1121		500 0097 10	
C0081	CITROËN	96034262	3151848001	HD 1215	CCT167	R051	263888	VKC2114	CR1121		500 0097 10	
C0083	CITROËN	5429379	1850282198	HD 1222	CCT325	R053	262406	VKC2194	CR1122			
C0085	INNOCENTI	GRB201	1850282706	HD 3255	CCT38	R083	359209	VKC2028	CR1110	223	500 0104 50	
C0085	ROVER	22A1156	1850282706	HD 3720	CCT38	R083	359209	VKC2028	CR1110	223	500 0349 50	
C0085	ROVER	GRB238	1850282706	HD 3255	CCT38	R083	359209	VKC2028	CR1110	223	500 0104 50	
C0087	SKODA	111152180	3151812001	HD 5529				VKC2233	CR1231		500 0178 10	375870
C0087	SKODA	113152180	3151812001	HD 5529				VKC2233	CR1231		500 0178 30	375870
C0087	SKODA	111152182	3151812001	HD 5529				VKC2233	CR1231		500 0306 10	375870
C0087	SKODA	111152180	3151812001	HD 5529				VKC2233	CR1231		500 0306 11	375870
C0088	SKODA	113152180	3151812001	HD 2466				VKC2107	CR1232			
C0089	FIAT	3989479	1850282620	HD 2304	CCT76		472154	VKC2525	CR1218	165/107		
C0089	SEAT	3309479	1850282620	HD 2304	CCT76		472154	VKC2525	CR1218	165/107		
C0089	SEAT	DG12621600	1850282620	HD 2304	CCT76		472154	VKC2525	CR1218	165/107		
C0090	ROVER	GRB239	3151852001	HD 3866	CCT268	R112	266272	VKC2217	CR1113	206/169	500 0365 30	
C0090	ROVER	GRB239	3151852001	HD 3866	CCT268	R112	266272	VKC2217	CR1113	206/169	500 0365 50	
C0091	ROVER	GRB232	3151888001	HD 2337							500 0359 50	
C0092	MERCEDES-BENZ	0002505215	3151133331	HD 1013	CCT144	R217	804019	VKC2045	CR1189	191/154	500 0001 10	370750
C0092	MERCEDES-BENZ	0002500315	3151133331	HD 1013	CCT144	R217	355543	VKC2045	CR1189	191/154	500 0001 20	370750
C0092	MERCEDES-BENZ	0002500615	3151133331	HD 1013	CCT144	R217	358080	VKC2045	CR1189	191/154	622 0712 00	370750
C0092	MERCEDES-BENZ	0002500715	3151133331	HD 1013	CCT144	R217	355543	VKC2045	CR1189	191/154	623 0856 00	370750
C0092	MERCEDES-BENZ	0002500915	3151133331	HD 1013	CCT144	R217	358080	VKC2045	CR1189	191/154	623 1557 00	370750
C0092	MERCEDES-BENZ	0002502115	3151133331	HD 1013	CCT144	R217	355543	VKC2045	CR1189	191/154	500 0001 20	370750
C0092	MERCEDES-BENZ	0002505115	3151133331	HD 1013	CCT144	R217	804019	VKC2045	CR1189	191/154	500 0001 10	370750
C0092	MERCEDES-BENZ	6612503015	3151133331	HD 1013	CCT144	R217	358080	VKC2045	CR1189	191/154	623 1557 00	370750
C0092	VOLVO	3296487	3151104001	HD 3994	CCT292	R217	804019	VKC2045	CR1189	191/154	500 0001 10	370750
C0093	MERCEDES-BENZ	0002506815	3151069031	HD 2432	CCT327		355591	VKC2184	CR1194			370755

REGGISPINTA DISTACCO FRIZIONE PER AUTO
CLUTCH RELEASE BEARING FOR CARS
BUTEE D'EMBRAYAGE POUR VOITURES
LISTA DI COMPARAZIONE - CROSS REFERENCES - LISTE CORRISPONDANCE

1

CORAM	APPLICAZIONE	ORIGINALE	SACHS	A.P BORG BECK	QH	VALEO IT	VALEO FR	SKF	LORETT	IRB	LUK	SNT
C0093	MERCEDES-BENZ	0002505515	3151069031	HD 2432	CCT327		355591	VKC2184	CR1194			370755
C0094	TRABANT	1800011108	1859900001								500 0471 00	
C0095	MERCEDES-BENZ	0002508715	3151122031	HD 3940	CCT340	R216	355594	VKC2202	CR1195	217/180	500 0212 10	370760
C0095	MERCEDES-BENZ	0002506115	3151122031	HD 3940	CCT340	R216	801211	VKC2184	CR1195	217/180	622 1664 00	370760
C0095	MERCEDES-BENZ	0002506215	3151122031	HD 3940	CCT340	R216	229060	VKC2184	CR1195	217/180	623 0228 06	370760
C0095	MERCEDES-BENZ	0012502315	3151122031	HD 3940	CCT340	R216	355594	VKC2202	CR1195	217/180	623 0228 00	370760
C0095	MERCEDES-BENZ	0012502415	3151122031	HD 3940	CCT340	R216	229060	VKC2202	CR1195	217/180	623 1666 00	370760
C0095	MERCEDES-BENZ	0012502415	3151122031	HD 3940	CCT340	R216	229060	VKC2202	CR1195	217/180	633 0080 00	370760
C0095	MERCEDES-BENZ	0002506215	3151122031	HD 3940	CCT340	R216	229060	VKC2184	CR1195	217/180	633 0080 06	370760
C0096	LEYLAND - DAF	GRB209	3151892001	HD 5748				VKC2533	CR1233		500 0478 10	375874
C0096	SKODA	969002514	3151892001	HD 5748				VKC2533	CR1233		500 0478 10	375874
C0096	SKODA	441.0.7058-123.6	3151892001	HD 5748				VKC2533	CR1233		500 0478 10	375874
C0096	SKODA	441.0.5058-123.6	3151892001	HD 5748				VKC2533	CR1233		500 0478 10	375874
C0096	VW	002141165C	3151892001	HD 5748				VKC2533	CR1233		500 0478 10	375874
C0099	FIAT-AUTOB.	7625958	3151895001	HD 5859		R204	804038	VKC2183	CR1152		500 0671 10	370230
C0099	FIAT/LANCIA	46466726	3151895001	HD 5859		R204	804038	VKC2183	CR1152		500 0671 30	370230
C0099	FIAT	46515184	3151895002	HD 5859		R204	804038	VKC2183	CR1152		500 0671 30	370230
C0099	LANCIA	7625958	3151895001	HD 5859		R249	804038	VKC2183	CR1152		500 0742 10	370230
C0099	LANCIA	7625598	3151895001	HD 5859		R249	804038	VKC2183	CR1152		500 0742 10	370230
C0100	BMW	1200627	3151039131	HD 1011			358230	VKC2061			500 0032 20	
C0100	BMW	1204224	3151039131	HD 1011			358230	VKC2061			500 0032 20	
C0101	BMW	1204419	3151231031	HD 1225	CCT141	R210	358250	VKC2120	CR1118	186/148	500 0035 10	375780
C0101	BMW	1207275	3151035231	HD 1225	CCT141	R210	358250	VKC2120	CR1118	186/148	500 0035 10	375780
C0101	BMW	1223366	3151231031	HD 1225	CCT141	R210	358250	VKC2120	CR1118	186/148	500 0725 10	375780
C0101	BMW	1207275	3151035231	HD 1225	CCT141	R210	358250	VKC2120	CR1118	186/148	500 0035 10	375780
C0101	BMW	1208423	3151035231	HD 1225	CCT141	R210	358250	VKC2120	CR1118	186/148	500 0725 10	375780
C0101	BMW	1223168	3151231031	HD 1225	CCT141	R210	358250	VKC2120	CR1118	186/148	500 0035 10	375780
C0101	BMW	1223168	3151231031	HD 1225	CCT141	R210	358250	VKC2120	CR1118	186/148	500 0725 10	375780
C0101	BMW	2226428	3151035231	HD 1225	CCT141	R210	358250	VKC2120	CR1118	186/148	500 0035 10	375780
C0101	BMW	2225619	3151231031	HD 1225	CCT141	R210	358250	VKC2120	CR1118	186/148	500 0725 10	375780
C0101	BMW	2226729	3151035231	HD 1225	CCT141	R210	358250	VKC2120	CR1118	186/148	500 0035 10	375780
C0101	BMW	2226792	3151231031	HD 1225	CCT141	R210	358250	VKC2120	CR1118	186/148	500 0725 10	375780
C0101	BMW	2227246	3151035231	HD 1225	CCT141	R210	358250	VKC2120	CR1118	186/148	500 0725 10	375780
C0101	BMW	2227536	3151231031	HD 1225	CCT141	R210	358250	VKC2120	CR1118	186/148	500 0035 10	375780
C0101	BMW	2226141	3151035231	HD 1225	CCT141	R210	358250	VKC2120	CR1118	186/148	500 0725 10	375780
C0101	BMW	1225203	3151035231	HD 1225	CCT141	R210	358250	VKC2120	CR1118	186/148	500 0035 10	375780
C0102	BMW	1204225	3151040131	HD 1234	CCT302		357804	VKC2126			500 0033 20	
C0102	BMW	1200023	3151040131	HD 1234	CCT302		357804	VKC2126			500 0033 20	
C0103	BMW	1204525	3151047231	HD 1235	CCT334	R211	358252	VKC2151	CR1119	193/156	500 0037 20	375782
C0104	FORD	6124271	1850282640	HD 2044	CCT133	R220	355610	VKC2164	CR1166	212/175	500 0184 10	375466
C0104	FORD	75BB7548BA	3151192041	HD 2044	CCT133	R220	355610	VKC2164	CR1166	212/175	500 0184 10	375466
C0104	FORD	80BB7548BA	3151192041	HD 2044	CCT133	R220	355610	VKC2164	CR1166	212/175	500 0184 10	375466
C0104	FORD	1554181	3151192041	HD 2044	CCT133	R220	355610	VKC2164	CR1166	212/175	500 0184 10	375466
C0104	FORD	1554191	3151192041	HD 2044	CCT133	R220	355610	VKC2164	CR1166	212/175	500 0184 10	375466
C0104	FORD	6052910	3151192041	HD 2044	CCT133	R220	355610	VKC2164	CR1166	212/175	500 0184 10	375466
C0104	FORD	6091027	3151192041	HD 2044	CCT133	R220	355610	VKC2164	CR1166	212/175	500 0184 10	375466
C0104	FORD	72BB-7548-AB	3151192041	HD 2044	CCT133	R220	355610	VKC2164	CR1166	212/175	500 0184 10	375466
C0104	FORD	83BB-7548-BA	3151192041	HD 2044	CCT133	R220	355610	VKC2164	CR1166	212/175	500 0184 10	375466
C0105	LAND ROVER	GRB236	1850282639	HD 2430	CCT124	R203	804015	VKC2225	CR1187		500 0344 50	370915
C0105	LAND ROVER	GRB223	1850282639	HD 2430	CCT124	R203	801255	VKC2225	CR1187		624 0531 00	370915
C0105	ROVER	571165	1850282639	HD 2430	CCT124	R203	804015	VKC2225	CR1187		624 1029 00	370915
C0105	ROVER	571160	1850282639	HD 2430	CCT124	R203	804015	VKC2225	CR1187		624 1806 00	370915
C0105	ROVER	594271	1850282639	HD 2430	CCT124	R203	804015	VKC2225	CR1187		500 0344 50	370915
C0105	ROVER	594269	1850282639	HD 2430	CCT124	R203	804015	VKC2225	CR1187		500 0344 50	370915
C0105	ROVER	594272	1850282639	HD 2430	CCT124	R203	804015	VKC2225	CR1187		500 0344 50	370915
C0106	SEAT	SE022125316B	1850282664	HD 5973	CCT322	R160	279673	VKC2219	CR1219		500 0373 30	370317/A

REGGISPINTA DISTACCO FRIZIONE PER AUTO
CLUTCH RELEASE BEARING FOR CARS
BUTEE D'EMBRAYAGE POUR VOITURES
LISTA DI COMPARAZIONE - CROSS REFERENCES - LISTE CORRISPONDANCE

CORAM	APPLICAZIONE	ORIGINALE	SACHS	A.P BORG BECK	QH	VALEO IT	VALEO FR	SKF	LORETT	IRB	LUK	SNT
C0106	SEAT	SE021125000D	1850282664	HD 5973	CCT322	R160	279673	VKC2219	CR1219		500 0373 30	370317/A
C0106	SEAT	SE021125000A	1850282661	HD 5973	CCT322	R160	279673	VKC2219	CR1219		500 0373 30	370317/A
C0106	SEAT	3938291	1850282661	HD 5973	CCT322	R160	279673	VKC2219	CR1219		500 0373 30	370317/A
C0107	VOLVO	672122	3151158031	HD 1219	CCT99	R208	358079	VKC2065	CR1260		500 0149 20	370317/A
C0107	VOLVO	1220824	3151190031	HD 1021	CCT99	R208	804043	VKC2065	CR1260		500 0323 21	370317/A
C0107	VOLVO	1220955	3151190031	HD 1219	CCT99	R208	358079	VKC2065	CR1260		500 0149 20	370317/A
C0107	VOLVO	3549881	3151158031	HD 1021	CCT99	R208	804043	VKC2065	CR1260		500 0323 21	370317/A
C0107	VOLVO	380569	3151190031	HD 1219	CCT99	R208	358079	VKC2065	CR1260		500 0149 20	370317/A
C0108	FORD	6157277	3151810004	HD 2043	CCT303		357524	VKC2165	CR1167		500 0221 10	375468
C0108	FORD	70VB7548CC	3151810004	HD 2043	CCT303		355589	VKC2165	CR1167		500 0221 20	375468
C0108	FORD	1662108	3151810004	HD 2043	CCT303		358344	VKC2165	CR1167		500 0231 10	375468
C0108	FORD	5029572	3151810004	HD 2220	CCT303		355589	VKC2165	CR1167		500 0231 11	375468
C0108	FORD	1501249	3151810004	HD 2220	CCT303		357524	VKC2165	CR1167		500 0231 50	375468
C0108	FORD	1513917	3151810004	HD 2043	CCT303		358344	VKC2165	CR1167		500 0231 10	375468
C0108	FORD	1641558	3151810004	HD 2220	CCT303		355589	VKC2165	CR1167		500 0221 10	375468
C0108	FORD	6093443	3151810004	HD 2220	CCT303		357524	VKC2165	CR1167		500 0221 10	375468
C0108	FORD	6093444	3151810004	HD 2220	CCT303		358344	VKC2165	CR1167		500 0221 10	375468
C0108	FORD	72LB-7548-AA	3151810004	HD 2220	CCT303		357524	VKC2165	CR1167		500 0231 10	375468
C0108	FORD	80VB7548AA	3151810004	HD 2220	CCT303		358344	VKC2165	CR1167		500 0231 50	375468
C0108	FORD	80VB-7548-BA	3151810004	HD 2043	CCT303		357524	VKC2165	CR1167		500 0231 50	375468
C0109	FORD	80VB-7548-BA	3151810004	HD 2043	CCT303		357524	VKC2165	CR1167		500 0231 50	
C0128	LADA	500031930	3151823001	HD 5509	CCT329		27916220	VKC2248				
C0129	LADA	21101601180						VKC2536	CR1172		500 0638 20	
C0130	VOLVO	3209530	3151078001	HD 3883	CCT281	R079	264663	VKC2234	CR1261		500 0291 20	370775 A
C0130	VOLVO	3293477	3151078001	HD 3883	CCT281	R079	264663	VKC2234	CR1261		500 0291 20	370775 A
C0130	VOLVO	293477	3151078001	HD 3883	CCT281	R079	264663	VKC2234	CR1261		500 0291 20	370775 A
C0131	VOLVO	3209429	3151814001	HD 5799	CCT335	R156	279423	VKC2235			500 0331 30	
C0150	MERCEDES-BENZ	0002504415	3151051031								500 0185 20	370767
C0150	MERCEDES-BENZ	0002504415	3151051031								500 0185 20	370767
C0151	DAEWOO	90251210	3151809002	HD 5130	CCT331		804012	VKC2238	CR1193	235/194	500 0321 10	375883
C0151	DAEWOO	96181631	3151809002	HD 5130	CCT331		804012	VKC2238	CR1193	235/194	500 0321 10	375883
C0151	OPEL	668651	3151809002	HD 5130	CCT331		804012	VKC2238	CR1193	235/194	500 0321 10	375883
C0151	OPEL	90129951	3151809002	HD 5130	CCT331		804012	VKC2238	CR1193	235/194	500 0321 10	375883
C0151	OPEL	90278884	3151809002	HD 5130	CCT331		804012	VKC2238	CR1193	235/194	500 0321 10	375883
C0151	SAAB	8732232	3151809002	HD 5130	CCT331		804012	VKC2238	CR1193	235/194	500 0321 10	375883
C0151	SAAB	8745762	3151809002	HD 5130	CCT331		804012	VKC2238	CR1193	235/194	500 0321 10	375883
C0152	CHEVROLET	909422										
C0153	DODGE-TALBOT	71241715		HD 3272	CCT89			VKC2530				
C0154	FORD	80BR7548A										
C0154	FORD	74BR7548E										
C0156	FORD	76DR7548AA							CR1157			
C0156	FORD	D20A-7548 AA							CR1157			
C0157	FORD								CR1252			
C0160	CITROËN	95666856	3000654001				801414				622 1607 00	
C0160	CITROËN	2050.41	3000654001								622 1607 09	
C0160	PEUGEOT	2050.42	3000654001								622 1607 09	
C0160	PEUGEOT	2050.99	3000654001								622 1607 00	
C0160	PEUGEOT	2050.20	3000654001								622 1607 09	
C0160	PEUGEOT	2004.L9	3000654001								622 1607 09	
C0160	PEUGEOT	2004.N2	3000654001								622 1607 09	
C0160	PEUGEOT	2004.G9	3000654001								622 1607 09	
C0165	WARTBURG	1800510100	3151868001								500 0470 00	
C0165	WARTBURG	3533009516	3151869001								500 0469 00	
C0166	SAAB	8704728	1850282744	HD 1238	CCT251		358359	VKC2232			500 0232 50	190728
C0180	SEAT-VW	085141165C	3151816001	HD 5002	CCT304	R206	357577	VKC2220	CR1239	227/187	500 0311 10	375884/NE
C0180	SEAT-VW	085141165E	3151816001	HD 5002	CCT304	R206	357577	VKC2220	CR1239	127/187	500 0311 10	375884/NE

REGGISPINTA DISTACCO FRIZIONE PER AUTO
CLUTCH RELEASE BEARING FOR CARS
BUTEE D'EMBRAYAGE POUR VOITURES
LISTA DI COMPARAZIONE - CROSS REFERENCES - LISTE CORRISPONDANCE

1

CORAM	APPLICAZIONE	ORIGINALE	SACHS	A.P BORG BECK	QH	VALEO IT	VALEO FR	SKF	LORETT	IRB	LUK	SNT
C0180	SEAT	085141165ES	3151816001	HD 5002	CCT304	R206	357577	VKC2220	CR1239	127/187	500 0311 10	375884/NE
C0181	VW	02A141165G	3151180231	HD 5693	CCT408		804005	VKC2241	CR1237		500 0440 10	375885/NE
C0181	VW	02A141165A	3151180131	HD 5693	CCT408		804005	VKC2241	CR1237		500 0440 10	375885/NE
C0181	VW	02A141165D	3151180031	HD 5693	CCT408		804005	VKC2241	CR1237		500 0440 10	375885/NE
C0181	VW	02A141165E	3151180231	HD 5693	CCT408		804005	VKC2241	CR1237		500 0440 10	375885/NE
C0181	SKODA	02A141165GS	3151180131	HD 5693	CCT408		804005	VKC2241	CR1237		500 0440 10	375885/NE
C0190	HILLMAN	1801819	3151093041	HD 3323	CC14			VKC2240				
C0190	MOSKVICK	4121601180	3151093041	HD 3323	CC14			VKC2240				
C0191	HILLMAN	BB 12620 S02										
C0191	HILLMAN	G 00045/19										
C0191	HILLMAN	582225 RO										
C0191	HILLMAN	G 98309/20										
C0191	HILLMAN	G 011126/20										
C0202	BEDFORD	8827050		HD 3267	CCT78			VKC2502				
C0205	LEYLAND - DAF	GRB225		HD 3493	CCT257							
C0207	HONDA	22810-PL3-005	3151867001	HD 5312	CCT256		804014	VKC3617			500 0490 60	
C0207	HONDA	22810-PL3-003	3151867001	HD 5312	CCT256		804014	VKC3617			500 0490 60	
C0207	LEYLAND - DAF	GRB237	3151867001	HD 3744	CCT256		804014	VKC3617			500 0490 60	
C0207	ROVER	GRB90251	3151867001	HD 5312	CCT256		804014	VKC3617			500 0490 60	
C0208	ROVER	GRB243	3151835001	HD 3821	CCT280		801457	VKC2538	CR1108	207/170	500 0352 50	
C0208	ROVER	GRB90258	3151835001	HD 3821	CCT280		804039	VKC2538	CR1108	207/170	622 1639 00	
C0208	ROVER	GRB90260	3151835001	HD 3821	CCT280		801457	VKC2538	CR1108	207/170	622 1671 00	
C0208	ROVER	GRB90260	3151835001	HD 3821	CCT280		801457	VKC2538	CR1108	207/170	623 1640 00	
C0209	HONDA	22810-PE6-003	3151820001	HD 3853	CCT297			VKC3542			500 0307 60	
C0209	HONDA	22810-PE6-023	3151833001	HD 3853	CCT330			VKC3542			619 1004 60	
C0209	HONDA	22810-PE6-921	3151820001	HD 3853	CCT297			VKC3542			500 0307 60	
C0209	ROVER	GRB90244	3151820001	HD 3853	CCT297			VKC3542			619 1004 60	
C0215	HYUNDAY	41421-21300	3151808001	HD 5337	CCT305		801589	VKC3515			622 1522 00	
C0215	HYUNDAY	41421-21000	3151808001	HD 5337	CCT305		801590	VKC3515			622 1527 00	
C0215	HYUNDAY	41421-21400	3151808001	HD 5337	CCT305		801591	VKC3515			622 1657 00	
C0215	HYUNDAY	41421-26000	3151808001	HD 5337	CCT305		801592	VKC3515			622 1869 60	
C0215	HYUNDAY	42421-21000	3151808001	HD 5337	CCT305		801727	VKC3515			623 1011 60	
C0215	HYUNDAY	41421-21300	3151808001	HD 5337	CCT305		804095	VKC3515			622 1522 00	
C0215	MITSUBISHI	MD706180	3151808001	HD 5337	CCT305		352379	VKC3515			500 0237 60	
C0215	MITSUBISHI	AW303858	3151808001	HD 5337	CCT305		801588	VKC3515			620 1524 00	
C0215	PROTON	PW550013	3151808001	HD 5337	CCT305		801587	VKC3515			620 1523 00	
C0220	NISSAN	DA30502-M8000	3151811001	HD 3875	CCT261			VKC3560			500 0296 60	
C0220	NISSAN	30502-M8005	3151811001	HD 3875	CCT261			VKC3560			500 0681 60	
C0220	NISSAN	30502-81N00	3151811001	HD 3875	CCT261			VKC3560			620 0859 00	
C0220	NISSAN	30502-81N05	3151811001	HD5343	CCT261			VKC3560			620 0859 00	
C0220	NISSAN	30502-M8000	3151811001	HD 3875	CCT261			VKC3560			500 0681 60	
C0220	NISSAN	30502-M8060	3151811001	HD 3875	CCT261			VKC3560			500 0681 60	
C0221	NISSAN	DA30502-21000	1863810001	HD 1062	CCT93		352369	VKC3500			500 0191 60	
C0221	NISSAN	DA30502-21000	1863810001	HD 1062	CCT93		804040	VKC3500			623 1985 60	
C0221	NISSAN	DA30502-21000	1863810001	HD 1062	CCT93		352369	VKC3500			628 2012 60	
C0222	NISSAN	30502-52A60	3151857001	HD 5340	CCT316			VKC3555			500 0464 60	
C0222	NISSAN	30502-52A00	3151857001	HD 5340	CCT316			VKC3555			500 0682 60	
C0222	NISSAN	30502-53J00	3151857001	HD 5340	CCT316			VKC3555			500 0464 60	
C0222	NISSAN	30502-53J01	3151857001	HD 5340	CCT316			VKC3555			500 0682 60	
C0223	NISSAN	30502-01B00	3151828001	HD 4923	CCT298			VKC3551			500 0414 60	
C0224	KIA	0K201-16-510	3151883001	HD5616				VKC3609			500 0639 60	
C0224	KIA	0K203-16-510	3151883001	HD5616				VKC3609			500 0639 60	
C0224	KIA	K201-16-510	3151858001	HD 5616				VKC3602			500 0639 60	
C0224	KIA	K203-16-510	3151883001	HD5616				VKC3609			500 0639 60	
C0224	KIA	MB301-16510A	3151883001	HD5616				VKC3609			500 0639 60	
C0224	MAZDA	B301-15-510A	3151858001	HD 5616				VKC3602			500 0639 60	

REGGISPINTA DISTACCO FRIZIONE PER AUTO
CLUTCH RELEASE BEARING FOR CARS
BUTEE D'EMBRAYAGE POUR VOITURES
LISTA DI COMPARAZIONE - CROSS REFERENCES - LISTE CORRISPONDANCE

CORAM	APPLICAZIONE	ORIGINALE	SACHS	A.P BORG BECK	QH	VALEO IT	VALEO FR	SKF	LORETT	IRB	LUK	SNT
C0224	MAZDA	B301-16-510/A	3151858001	HD 5616				VKC3609			500 0639 60	
C0224	MAZDA	B311-16-510	3151858001	HD 5616				VKC3602			500 0639 60	
C0224	MAZDA	B315-16-510	3151858001	HD 5616				VKC3609			500 0639 60	
C0224	MAZDA	E8BZ-7548-A	3151858001	HD 5616				VKC3602			500 0639 60	
C0225	MOSKVICK	21411601180	3151998801					VKC2520			500 0687 10	
C0226	ASIA	H606-16-510A	3151807001	HD 5245				VKC3600			500 0235 60	
C0226	FORD	3252695	3151807001	HD 5246				VKC3510			500 0236 60	
C0226	FORD	3256394	3151807001	HD 5806				VKC3600			500 0494 60	
C0226	FORD	3396878	3151807001	HD 5807				VKC3510			500 0497 60	
C0226	FORD	3730230	3151807001	HD 5245				VKC3507			500 0557 60	
C0226	FORD	E92Z-7548-B	3151807001	HD 5806				VKC3600			623 1625 60	
C0226	FORD	F32Z-7548-A	3151807001	HD 5245				VKC3507			500 0557 60	
C0226	FORD	F20116510	3151807001	HD 5245				VKC3600			622 1626 60	
C0226	KIA	OFE62-16-510A	3151807001	HD 5246				VKC3510			623 1625 60	
C0226	KIA	0SR02-16-510	3151807001	HD 5245				VKC3507			500 0557 60	
C0226	KIA	K011-16-510	3151807001	HD 5806				VKC3600			500 0497 60	
C0226	KIA	SR02-16-510A	3151807001	HD 5245				VKC3507			500 0557 60	
C0226	KIA	0K9A2-16-510	3151807001	HD 5806				VKC3600			500 0497 60	
C0226	KIA	K9A2-16-510	3151807001	HD 5245				VKC3507			500 0557 60	
C0226	KIA	0K72A-16-510A	3151807001	HD 5245				VKC3507			500 0557 60	
C0226	KIA	K72A-16-510A	3151807001	HD 5806				VKC3600			500 0497 60	
C0226	KIA	OK011-16-510	3151807001	HD 5246				VKC3600			623 1954 60	
C0226	MAZDA	8540-16-510B	3151807001	HD 5806				VKC3600			500 0497 60	
C0226	MAZDA	F201-16-510	3151807001	HD 5245				VKC3507			500 0557 60	
C0226	MAZDA	BP02-16-510	3151807001	HD 5245				VKC3510			500 0494 60	
C0226	MAZDA	F853-16-510	3151807001	HD 5806				VKC3600			500 0497 60	
C0226	MAZDA	FE62-16-510B	3151807001	HD 5245				VKC3507			500 0557 60	
C0226	MAZDA	FE84-16-510	3151807001	HD 5245				VKC3507			500 0557 60	
C0226	MAZDA	G561-16-510	3151807001	HD 5245				VKC3507			500 0557 60	
C0226	MAZDA	G560-16-510B	3151807001	HD 5806				VKC3600			500 0497 60	
C0226	MAZDA	FE82-16-510A	3151807001	HD 5806				VKC3600			500 0497 60	
C0226	MAZDA	FE62-16-510/A	3151807001	HD 5806				VKC3600			500 0497 60	
C0226	MAZDA	N309-16-510	3151807001	HD 5807				VKC3510			500 0494 60	
C0226	MAZDA	SE03-16-510A	3151807001	HD 5246				VKC3600			500 0497 60	
C0228	ZAZ	24-1601180-02										
C0228	ZAZ	45-43139911										
C0229	ZAZ	2451601180										
C0230	AUDI-VW	012141165 A-D	3151822032	HD 5691	CCT529		804003	VKC2601	CR1238	204/167	500 0322 10	370714/A
C0230	AUDI-VW	01E141165 A-B	3151822032	HD 5691	CCT529		804003	VKC2601	CR1238	204/167	500 0322 11	370714/A
C0230	FORD	6164967	3151843001	HD 5526	CCT529		804003	VKC2601	CR1238	204/167	500 0410 10	370714/A
C0230	FORD	88BB-7548-AA	3151843001	HD 5526	CCT529		804022	VKC2601	CR1238	204/167	624 0819 00	370714/A
C0230	PORSCHE	01E141165AP	3151843001	HD 5526	CCT529		804022	VKC2601	CR1238	204/167	624 0655 00	370714/A
C0231	SOSTITUITO DA C0236											
C0232	SOSTITUITO DA C0237											
C0233	RENAULT	7700102781	3151998701	HD 5971			804102	VKC2433	CR1212		500 0758 30	
C0233	RENAULT	7700870067	3151998701	HD 5971			804102	VKC2433	CR1212		500 0758 30	
C0233	RENAULT	7700870859	3151998701	HD 5971			804102	VKC2433	CR1212		500 0758 30	
C0233	RENAULT	7700874780	3151998701	HD 5971			804102	VKC2433	CR1212		500 0758 30	
C0233	RENAULT	7701041850	3151998701	HD 5971			804102	VKC2433	CR1212		500 0758 30	
C0233	MITSUBISHI	M819939	3151998701	HD 5971			804102	VKC2433	CR1212		500 0758 30	
C0233	VOLVO	30819939.7	3151998701	HD 5971			804102	VKC2433	CR1212		500 0758 30	
C0234	ALFA	46465174	3151903001			R231	804098		CR1155		500 0540 30	
C0234	ALFA	7778277	3151903001			R231	804098		CR1155		500 0540 30	
C0234	ALFA	60777850	3151903001			R231	804098		CR1155		500 0540 30	
C0234	ALFA	60800551	3151903001			R231	804098		CR1155		500 0540 30	
C0234	FIAT	60811609	3151903001			R231	804098		CR1155		500 0540 30	

REGGISPINTA DISTACCO FRIZIONE PER AUTO
CLUTCH RELEASE BEARING FOR CARS
BUTEE D'EMBRAYAGE POUR VOITURES
LISTA DI COMPARAZIONE - CROSS REFERENCES - LISTE CORRISPONDANCE

1

CORAM	APPLICAZIONE	ORIGINALE	SACHS	A.P BORG BECK	QH	VALEO IT	VALEO FR	SKF	LORETT	IRB	LUK	SNT
C0234	FIAT	60814442	3151903001			R231	804098		CR1155		500 0540 30	
C0234	FIAT	7683163	3151903001			R231	804098		CR1155		500 0540 30	
C0234	LANCIA	7787515	3151903001			R231	804098		CR1155		500 0540 30	
C0234	LANCIA	5888647	3151903001			R231	804098		CR1155		500 0540 30	
C0234	LANCIA	5890305	3151903001			R231	804098		CR1155		500 0540 30	
C0234	LANCIA	5892688	3151903001			R231	804098		CR1155		500 0540 30	
C0235	DAIHATSU	90363-38084DU	1863805001	HD 4579	CCT347		352371	VKC3505			500 0341 50	
C0235	DAIHATSU	90363-38009DU	1850282712	HD 1251	CCT101		359217	VKC3205			500 0353 50	
C0235	ISUZU	4293481	1863805001	HD 1251	CCT101		352371	VKC3505			500 0127 50	
C0235	ISUZU	9-00095-040-0	1850282712	HD 3264	CCT308		359217	VKC3205			500 0176 60	
C0235	ISUZU	9-00095-040-1	1850282709	HD 3268	CCT54		359221	VKC3505			500 0227 60	
C0235	ISUZU	94024052	1863805001	HD 3822	CCT70		352371	VKC3205			500 0340 50	
C0235	MITSUBISHI	MD701283	1850282712	HD 4579	CCT308		352371	VKC3505			500 0413 50	
C0235	MITSUBISHI	MD701125	1863805001	HD 1251	CCT101		352371	VKC3505			623 1629 60	
C0235	OPEL	4293481	1850282709	HD 3268	CCT347		359221	VKC3205			500 0519 60	
C0235	OPEL	R91132063	1863805001	HD 4579	CCT101		359217	VKC3505			619 0094 60	
C0235	ROVER	GRP207	1863805001	HD 3822	CCT54		359221	VKC3205			622 0419 06	
C0235	ROVER	GRP209	1850282709	HD 1251	CCT70		352371	VKC3505			622 0420 00	
C0235	SUZUKI	09269-38002	1863805001	HD 1251	CCT101		352371	VKC3505			623 1629 60	
C0235	SUZUKI	09269-38001	1850282709	HD 3268	CCT347		359221	VKC3205			500 0519 60	
C0235	SUBARU	33151-7800	1863805001	HD 1251	CCT101		352371	VKC3505			623 1629 60	
C0235	SUBARU	83151-7800	1850282709	HD 3268	CCT347		359221	VKC3205			500 0519 60	
C0235	TOYOTA	90363-38084	1863805001	HD 1251	CCT101		352371	VKC3505			623 1629 60	
C0235	TOYOTA	90363-38001	1850282709	HD 3268	CCT347		359221	VKC3205			500 0519 60	
C0235	TOYOTA	90363-38009	1863805001	HD 1251	CCT101		352371	VKC3505			623 1629 60	
C0235	TOYOTA	90363-38019	1850282709	HD 3268	CCT347		359221	VKC3205			500 0519 60	
C0235	TOYOTA	90363-38043	1850282709	HD 3268	CCT347		359221	VKC3205			500 0519 60	
C0235	TOYOTA	90363-38056	1863805001	HD 1251	CCT101		352371	VKC3505			623 1629 60	
C0236	CITROËN	96092637	3151874002	HD 5848	CCT578	R239	804006	VKC2239	CR1127			
C0236	CITROËN	95656587	3151874002	HD 5848	CCT578	R239	804006	VKC2239	CR1127			
C0236	FIAT	96092637	3151874002	HD 5848	CCT578	R239	804006	VKC2239	CR1127			
C0236	LANCIA	2041,47	3151874002	HD 5848	CCT578	R239	804006	VKC2239	CR1127			
C0236	PEUGEOT	2041,47	3151874002	HD 5848	CCT578	R239	804006	VKC2239	CR1127			
C0237	CITROËN	2041,59	3151874001	HD 7606	CCT379	R223	804100	VKC2537	CR1129		500 0462 30	
C0237	CITROËN	2041,44	3151874001	HD 7606	CCT379	R235	801456	VKC2537	CR1129		624 0793 00	
C0237	FIAT	9609263780	3151874001	HD 7606	CCT379	R235	801430	VKC2537	CR1129		624 0794 00	
C0237	FIAT	9619888580	3151874001	HD 7606	CCT379	R223	801430	VKC2537	CR1129		624 0794 00	
C0237	LANCIA	1474082080	3151874001	HD 7606	CCT379	R235	801352	VKC2537	CR1129		624 0795 00	
C0237	PEUGEOT	2041,44	3151874001	HD 7606	CCT379	R223	801554	VKC2537	CR1129		624 1342 00	
C0237	PEUGEOT	2041,59	3151874001	HD 7606	CCT379	R235	804097	VKC2537	CR1129		500 0462 30	
C0238	LADA	2108-1601180	3151821002				804010	VKC2535			500 0638 20	
C0239	FORD	6928450	3151891001	HD 5911	CCT368			VKC2546			500 0535 10	
C0239	FORD	6744842	3151891001	HD 5911	CCT368			VKC2546			500 0535 10	
C0239	FORD	93ZT-7548-AA	3151891001	HD 5911	CCT368			VKC2546			500 0535 10	
C0239	FORD	93ZT-7548-AB	3151891001	HD 5911	CCT368			VKC2546			500 0535 10	
C0240	ZAZ	4013872188130	3151271741									
C0242	VOLVO	238082										
C0243	CITROËN	9633922480	3151994301					VKC2523				
C0243	PEUGEOT	9625812880	3151994301					VKC2523				
C0243	FIAT/LANCIA	963392248	3151994301				804188	VKC2523	CR1263		500 0924 10	
C0243	PEUGEOT/CITROËN	2041.68	3151994301				804188	VKC2523	CR1263		500 0924 10	
C0243	PEUGEOT/CITROËN	2041.63	3151994301				804188	VKC2523	CR1263		500 0924 10	
C0244	FORD	4056754										
C0246	LADA	1110-1601180										
C0247	TOYOTA	31230-05021	3151900001	HD 5890								
C0247	TOYOTA	31230-05020	3151900001	HD 5890								

REGGISPINTA DISTACCO FRIZIONE PER AUTO
CLUTCH RELEASE BEARING FOR CARS
BUTEE D'EMBRAYAGE POUR VOITURES
LISTA DI COMPARAZIONE - CROSS REFERENCES - LISTE CORRISPONDANCE

CORAM	APPLICAZIONE	ORIGINALE	SACHS	A.P BORG BECK	QH	VALEO IT	VALEO FR	SKF	LORETT	IRB	LUK	SNT
C0247	TOYOTA	31230-32060	3151900001	HD 5890								
C0248	TOYOTA	31230-35080	3151881001	HD 5618								
C0248	TOYOTA	31230-35070	3151881001	HD 5618								
C0248	VOLKSWAGEN	J31230-35070	3151881001	HD 5618								
C0250	PEUGEOT	2041.55							CR1153		500104800	
C0250	CITROËN	2041.55							CR1153		500104800	
C0250	FIAT/ IVECO	9621805380							CR1153		500104800	
C0251	FIAT	9625260580	3000743001				804101		CR1156		500073230	
C0251	FIAT	9622587580	3000743001				804101		CR1156		500073230	
C0251	FIAT	1303251080	3000743001				804101		CR1156		500073230	
C0251	FIAT	1303252080	3000743001				804101		CR1156		500073230	
C0251	FIAT	5894391	3000743001				804101		CR1156		500073230	
C0251	FIAT	5895088	3000743001				804101		CR1156		500073230	
C0253	MASERATI	314620108		HD 3948								
C0253	MASERATI	331TF372		HD 3948								
C0254	FIAT					R052						
C0255	OPEL	4500779	3151997501								500072810	
C0255	OPEL	4502795	3151997501								500072810	
C0255	OPEL	9161079	3151997501								500072810	
C0255	OPEL	9162590	3151997501								500072810	
C0255	RENAULT	7700868591	3151997501								500072810	
C0255	RENAULT	7700874423	3151997501								500072810	
C0255	RENAULT	7700874795	3151997501								500072810	
C0256	LANCIA	614937										
C0257	NISSAN	30502-0F500			CCT619							
C0258	NISSAN	30502-9C000			CCT607							
C0258	NISSAN	30501-Y9504			CCT607							
C0259	VOLKSWAGEN	02T141165B	3151272935								500100510	
C0259	VOLKSWAGEN	02T141165B	3151272905								500100510	
C0259	VOLKSWAGEN	02T141165B	3189000931								500100510	
C0259	VOLKSWAGEN	02T141165B	3151272935								500106520	
C0259	VOLKSWAGEN	02T141165B	3151272905								500106520	
C0259	VOLKSWAGEN	02T141165B	3189000931								500106520	
C0259	VOLKSWAGEN	02T141165A	3151272935								500100510	
C0259	VOLKSWAGEN	02T141165A	3151272905								500100510	
C0259	VOLKSWAGEN	02T141165A	3189000931								500100510	
C0259	VOLKSWAGEN	02T141165A	3151272935								500106520	
C0259	VOLKSWAGEN	02T141165A	3151272905								500106520	
C0259	VOLKSWAGEN	02T141165A	3189000931								500106520	
C0259	SKODA	02T141165A	3151272935								500100510	
C0259	SKODA	02T141165A	3151272905								500100510	
C0259	SKODA	02T141165A	3189000931								500100510	
C0259	SKODA	02T141165A	3151272935								500106520	
C0259	SKODA	02T141165A	3151272905								500106520	
C0259	SKODA	02T141165A	3189000931								500106520	
C0259	AUDI-VW-SEAT-SKODA	02T141170	3151272935								500100510	
C0259	AUDI-VW-SEAT-SKODA	02T141170	3151272905								500100510	
C0259	AUDI-VW-SEAT-SKODA	02T141170	3189000931								500100510	
C0259	AUDI-VW-SEAT-SKODA	02T141170	3151272935								500106520	
C0259	AUDI-VW-SEAT-SKODA	02T141170	3151272905								500106520	
C0259	AUDI-VW-SEAT-SKODA	02T141170	3189000931								500106520	
C0260	SKODA-VW	002141170	3189000536								500107020	
C0260	SEAT-VW - SKODA	002141165	3189000536								500107020	
C0260	SKODA-VW	002141170	3151270503								500107020	
C0260	SEAT-VW - SKODA	002141165	3151270503								500107020	
C0262	VOLGA											

REGGISPINTA DISTACCO FRIZIONE PER AUTO
CLUTCH RELEASE BEARING FOR CARS
BUTEE D'EMBRAYAGE POUR VOITURES
LISTA DI COMPARAZIONE - CROSS REFERENCES - LISTE CORRISPONDANCE

1

CORAM	APPLICAZIONE	ORIGINALE	SACHS	A.P BORG BECK	QH	VALEO IT	VALEO FR	SKF	LORETT	IRB	LUK	SNT
C0264	DAIHATSU	31230-87204	3151996401					VKC3668			500078260	
C0264	DAIHATSU-TOYOTA	31230-87280	3151996401					VKC3668			500078260	
C0265	SUBARU	30508-KA001	3151997401					VKC3629			500060460	
C0265	SUBARU	30508-KA040	3151997401					VKC3629			500060460	
C0266	SUZUKI	09269-28004	3151819001	HD5234				VKC3567			500032560	
C0266	SUZUKI	09269-28005	3151819001	HD5234				VKC3567			500032560	
C0266	SUZUKI	09269-28006	3151819001	HD5234				VKC3567			500032560	

REGGISPINTA DISTACCO FRIZIONE PER AUTO
CLUTCH RELEASE BEARING FOR CARS
BUTEE D'EMBRAYAGE POUR VOITURES
LISTA DI COMPARAZIONE - CROSS REFERENCES - LISTE CORRISPONDANCE

ALFA ROMEO	CORAM
510513	C0036
530916	C0036
536482	C0036
542684	C0036
5967728	C0011
7633353	C0011
7778277	C0234
46465174	C0234
60502668	C0036
60516873	C0035
60521134	C0037
60581569	C0036
60603915	C0036
60777605	C0011
60777850	C0234
60800551	C0234
60805112	C0011
60806065	C0024
60811561	C0011
93808387	C0025
140201204200	C0075
164001204201	C0011
1.054.812.042.00	C0035
1.054.812.042.02	C0035
1.160.012.042.02	C0037

ARO	CORAM
7700638870	C0043

ASIA	CORAM
H606-16-510A	C0226

AUDI	CORAM
012141165 A-D	C0230
01E141165 A-B	C0230
020141165 B-H	C0078
02T141170	C0259
084141165A-D	C0077
088141165A-C	C0076
088141165A-C	C0076
091141165A-D	C0076
111141165A	C0075
111141167C	C0075
113141165A-D	C0076

AUTOBIANCHI	CORAM
4192150	C0009
4304521	C0004
4304832	C0009
4438567	C0004
7625958	C0099

BEDFORD	CORAM
668635	C0048
8827050	C0202
90111364	C0048

BMW	CORAM
1200023	C0102
1200627	C0100
1204224	C0100
1204225	C0102
1204419	C0101
1204525	C0103
1207275	C0101
1208423	C0101
1223168	C0101
1223366	C0101
1225203	C0101
2225619	C0101
2226141	C0101
2226428	C0101
2226729	C0101
2226792	C0101
2227246	C0101
2227536	C0101

CHEVROLET	CORAM
909422	C0152

CITROËN	CORAM
2041.33	C0059
2041.44	C0237
2041.5	C0066
2041.55	C0250
2041.59	C0237
2041.6	C0060
2041.61	C0066
2041.63	C0243
2041.67	C0060
2041.68	C0243
2050.41	C0160
5429379	C0083
5478534	C0081
91512268	C0046
91537167	C0046
91537419	C0060
95492693	C0045
95494929	C0079
95577787	C0081
95616712	C0080
95656587	C0236
95666856	C0160
96034262	C0081
96034269	C0046
96050128	C0060
96092637	C0236
96105389	C0045
97501450	C0059
97501451	C0059
9633922480	C0243
0056670600CI	C0059
7910011860CI	C0046
AM31401C	C0080

DACIA	CORAM
7700519170	C0043
7701348231	C0043

DAEWOO	CORAM
90251210	C0151
96181631	C0151

DAF	CORAM
GRB209	C0096
GRB225	C0205
GRB237	C0207

DAIHATSU	CORAM
31230-87204	C0264
31230-87280	C0264
90363-38009DU	C0235
90363-38084DU	C0235

DODGE	CORAM
71241715	C0153

FIAT	CORAM
816341	C0007
832623	C0007
1391793	C0014
1904718	C0025
1904749	C0026
1904795	C0025
1904797	C0026
1905290	C0026
1905318	C0025
1908520	C0026
1908521	C0025
3989479	C0089
4090586	C0008
4115314	C0006
4136712	C0017
4151164	C0002
4156828	C0013
4156829	C0013
4161044	C0028
4190622	C0011
4207838	C0013
4226671	C0006
4237218	C0013
4263658	C0006
4297917	C0030
4305128	C0011
4305532	C0013
4316750	C0013
4316750	C0014
4333358	C0003
4336840	C0005
4409361	C0011
4409362	C0011

REGGISPINTA DISTACCO FRIZIONE PER AUTO
CLUTCH RELEASE BEARING FOR CARS
BUTEE D'EMBRAYAGE POUR VOITURES
LISTA DI COMPARAZIONE - CROSS REFERENCES - LISTE CORRISPONDANCE

4409889	**C0013**
4438567	**C0004**
4439919	**C0027**
4439919	**C0009**
5119290	**C0018**
5888360	**C0011**
5888408	**C0024**
5888478	**C0006**
5888486	**C0013**
5890224	**C0045**
5890368	**C0011**
5894391	**C0251**
5895088	**C0251**
5933505	**C0010**
5950714	**C0022**
5954175	**C0023**
5967726	**C0011**
5967728	**C0010**
5991916	**C0027**
7540733	**C0022**
7540733	**C0022**
7540733	**C0022**
7540733	**C0022**
7588805	**C0011**
7622547	**C0011**
7625958	**C0099**
7628856	**C0024**
7662270	**C0027**
7681283	**C0011**
7683163	**C0234**
7683329	**C0004**
7688832	**C0011**
7799778	**C0011**
46466726	**C0099**
46515184	**C0099**
46539189	**C0011**
60811609	**C0234**
60814442	**C0234**
93800282	**C0025**
93800287	**C0025**
93806822	**C0025**
93812488	**C0026**
95492693	**C0045**
96090882	**C0060**
96092637	**C0236**
97051536	**C0020**
98471635	**C0026**
963392248	**C0243**
1303251080	**C0251**
1303252080	**C0251**
9609088280	**C0060**
9609263780	**C0237**
9614677380	**C0066**
9617860880	**C0060**
9619888580	**C0237**
9621805380	**C0250**
9621805380	**C0250**
9622587580	**C0251**
9625260580	**C0251**
FORD	**CORAM**
1484974	**C0074**
1484975	**C0074**
1484977	**C0073**
1484978	**C0073**

1498343	**C0074**
1498344	**C0074**
1498345	**C0074**
1498347	**C0073**
1498348	**C0073**
1501249	**C0108**
1513917	**C0108**
1554181	**C0104**
1554189	**C0074**
1554190	**C0073**
1554191	**C0104**
1555006	**C0074**
1555007	**C0073**
1619151	**C0073**
1641558	**C0108**
1643413	**C0071**
1662108	**C0108**
3252695	**C0226**
3256394	**C0226**
3396878	**C0226**
3730230	**C0226**
4056754	**C0244**
5010153	**C0074**
5021097	**C0074**
5021388	**C0074**
5027199	**C0071**
5029564	**C0071**
5029572	**C0108**
5029582	**C0074**
6042593	**C0071**
6052910	**C0104**
6091025	**C0073**
6091026	**C0074**
6091027	**C0104**
6093443	**C0108**
6093444	**C0108**
6124270	**C0074**
6124271	**C0104**
6124272	**C0073**
6157277	**C0108**
6164967	**C0230**
6546467	**C0072**
6744842	**C0239**
6846395	**C0071**
6928450	**C0239**
7166796	**C0072**
70BB-7548-LC	**C0073**
70VB7548CC	**C0108**
72BB-7548-AB	**C0104**
72LB-7548-AA	**C0108**
74BR7548E	**C0154**
75AB7548AA	**C0073**
75BB7548AA	**C0074**
75BB7548BA	**C0104**
76DR7548AA	**C0156**
77FB-7548-CA	**C0071**
80AB-7548-AA	**C0073**
80AB-7548-AD	**C0073**
80BB-7548-AA	**C0074**
80BB7548BA	**C0104**
80BR7548A	**C0154**
80VB7548AA	**C0108**
80VB-7548-BA	**C0108**
80VB-7548-BA	**C0109**
83BB-7548-AA	**C0074**
83BB-7548-BA	**C0104**
83BB-7548-CA	**C0073**

86AB-7548-AA	**C0071**
88BB-7548-AA	**C0230**
91AB7548BA	**C0072**
91AB7548BB	**C0072**
92WX-7548-AA	**C0071**
93BX-7L596-CA	**C0074**
93ZT-7548-AA	**C0239**
93ZT-7548-AB	**C0239**
D20A-7548 AA	**C0156**
E92Z-7548-B	**C0226**
F20116510	**C0226**
F32Z-7548-A	**C0226**
HILLMAN	
1801819	**C0190**
582225 RO	**C0191**
BB 12620 S02	**C0191**
G 00045/19	**C0191**
G 011126/20	**C0191**
G 98309/20	**C0191**
HONDA	**CORAM**
22810-PE6-003	**C0209**
22810-PE6-023	**C0209**
22810-PE6-921	**C0209**
22810-PL3-003	**C0207**
22810-PL3-005	**C0207**
HYUNDAY	**CORAM**
41421-21000	**C0215**
41421-21300	**C0215**
41421-21400	**C0215**
41421-26000	**C0215**
42421-21000	**C0215**
INNOCENTI	**CORAM**
GRB201	**C0085**
ISUZU	**CORAM**
4293481	**C0235**
94024052	**C0235**
9-00095-040-0	**C0235**
9-00095-040-1	**C0235**
IVECO	**CORAM**
1904718	**C0025**
1904749	**C0026**
1904795	**C0025**
1904797	**C0026**
1905290	**C0026**
1905318	**C0025**
1908520	**C0026**
1908521	**C0025**
93800282	**C0025**
93800287	**C0025**

REGGISPINTA DISTACCO FRIZIONE PER AUTO
CLUTCH RELEASE BEARING FOR CARS
BUTEE D'EMBRAYAGE POUR VOITURES
LISTA DI COMPARAZIONE - CROSS REFERENCES - LISTE CORRISPONDANCE

93806822	**C0025**
93812488	**C0026**
98471635	**C0026**
9621805380	**C0250**
KIA	**CORAM**
0K201-16-510	**C0224**
0K203-16-510	**C0224**
0K72A-16-510A	**C0226**
0K9A2-16-510	**C0226**
0SR02-16-510	**C0226**
K011-16-510	**C0226**
K201-16-510	**C0224**
K203-16-510	**C0224**
K72A-16-510A	**C0226**
K9A2-16-510	**C0226**
MB301-16510A	**C0224**
OFE62-16-510A	**C0226**
OK011-16-510	**C0226**
SR02-16-510A	**C0226**
LADA	**CORAM**
500031930	**C0128**
21011601180	**C0028**
21011601182	**C0021**
21011601182	**C0028**
21011601185	**C0028**
21081601180	**C0029**
21081601180	**C0029**
21081601180	**C0029**
21101601180	**C0129**
1110-1601180	**C0246**
2108-1601180	**C0238**
LANCIA	**CORAM**
2041.47	**C0236**
614937	**C0256**
4227672	**C0003**
4409361	**C0011**
5888470	**C0030**
5888476	**C0011**
5888647	**C0234**
5890305	**C0234**
5892688	**C0234**
7540733	**C0022**
7625598	**C0099**
7625958	**C0099**
7628856	**C0024**
7787515	**C0234**
46466726	**C0099**
82277893	**C0031**
82310049	**C0030**
82314496	**C0030**
82323218	**C0032**
963392248	**C0243**
1474082080	**C0237**
LAND ROVER	**CORAM**
GRB223	**C0105**

GRB236	**C0105**
LEYLAND	**CORAM**
GRB209	**C0096**
GRB225	**C0205**
GRB237	**C0207**
MASERATI	**CORAM**
314620108	**C0253**
331TF372	**C0253**
MAZDA	**CORAM**
8540-16-510B	**C0226**
B301-15-510A	**C0224**
B301-16-510/A	**C0224**
B311-16-510	**C0224**
B315-16-510	**C0224**
BP02-16-510	**C0226**
E8BZ-7548-A	**C0224**
F201-16-510	**C0226**
F853-16-510	**C0226**
FE62-16-510/A	**C0226**
FE62-16-510B	**C0226**
FE82-16-510A	**C0226**
FE84-16-510	**C0226**
G560-16-510B	**C0226**
G561-16-510	**C0226**
N309-16-510	**C0226**
SE03-16-510A	**C0226**
MERCEDES-BENZ	**CORAM**
2500315	**C0092**
2500615	**C0092**
2500715	**C0092**
2500915	**C0092**
2502115	**C0092**
2504415	**C0150**
2504415	**C0150**
2505115	**C0092**
2505215	**C0092**
2505515	**C0093**
2506115	**C0095**
2506215	**C0095**
2506215	**C0095**
2506815	**C0093**
2508715	**C0095**
12502315	**C0095**
12502415	**C0095**
12502415	**C0095**
6612503015	**C0092**
MITSUBISHI	**CORAM**
AW303858	**C0215**
M819939	**C0233**
MD701125	**C0235**
MD701283	**C0235**
MD706180	**C0215**

MOSKVICK	**CORAM**
4121601180	**C0190**
21411601180	**C0225**
NISSAN	**CORAM**
30501-Y9504	**C0258**
30502-01B00	**C0223**
30502-0F500	**C0257**
30502-52A00	**C0222**
30502-52A60	**C0222**
30502-53J00	**C0222**
30502-53J01	**C0222**
30502-81N00	**C0220**
30502-81N05	**C0220**
30502-9C000	**C0258**
30502-M8000	**C0220**
30502-M8005	**C0220**
30502-M8060	**C0220**
DA30502-21000	**C0221**
DA30502-21000	**C0221**
DA30502-21000	**C0221**
DA30502-M8000	**C0220**
OPEL	**CORAM**
668631	**C0047**
668634	**C0048**
668636	**C0047**
668641	**C0048**
668642	**C0048**
668645	**C0049**
668648	**C0048**
668650	**C0050**
668651	**C0151**
668652	**C0050**
668653	**C0050**
2865130	**C0047**
3432373	**C0048**
4293481	**C0235**
4500779	**C0255**
4502795	**C0255**
8967417	**C0047**
9161079	**C0255**
9162590	**C0255**
90002425	**C0047**
90002479	**C0047**
90086646	**C0048**
90092811	**C0048**
90092812	**C0048**
90111364	**C0048**
90112260	**C0049**
90129095	**C0049**
90129951	**C0049**
90129951	**C0151**
90170928	**C0048**
90250658	**C0050**
90250663	**C0050**
90278884	**C0151**
90278910	**C0050**
R91132063	**C0235**

REGGISPINTA DISTACCO FRIZIONE PER AUTO
CLUTCH RELEASE BEARING FOR CARS
BUTEE D'EMBRAYAGE POUR VOITURES
LISTA DI COMPARAZIONE - CROSS REFERENCES - LISTE CORRISPONDANCE

1

PEUGEOT	CORAM
2021.23	C0065
2034.09	C0061
2034.1	C0061
2041.11	C0061
2041.11	C0062
2041.14	C0058
2041.14	C0068
2041.2	C0064
2041.21	C0067
2041.22	C0046
2041.25	C0065
2041.26	C0065
2041.27	C0069
2041.28	C0045
2041.29	C0059
2041.3	C0068
2041.31	C0046
2041.33	C0059
2041.38	C0043
2041.39	C0069
2041.4	C0060
2041.42	C0060
2041.43	C0069
2041.44	C0237
2041.45	C0060
2041.47	C0236
2041.5	C0066
2041.55	C0250
2041.59	C0237
2041.61	C0066
2041.63	C0243
2041.68	C0243
2050.2	C0160
2050.42	C0160
2050.99	C0160
56835500	C0068
7910011860	C0046
7940708649	C0068
7940709765	C0069
9625812880	C0243
2004.G9	C0160
2004.L9	C0160
2004.N2	C0160

POLSKI	CORAM
17411	C0015
4090586	C0008
4409889	C0013

PORSCHE	CORAM
19141165	C0076
01E141165AP	C0230
113.141.165B	C0076

PROTON	CORAM
PW550013	C0215

RENAULT	CORAM
5000404186	C0041
5000793794	C0041
5001830917	C0041
7000736850	C0041
7700102781	C0233
7700300039	C0041
7700519170	C0043
7700519171	C0043
7700523629	C0045
7700576298	C0045
7700588687	C0056
7700589253	C0045
7700625461	C0046
7700638870	C0043
7700638870	C0043
7700674114	C0040
7700676150	C0043
7700692431	C0040
7700725237	C0039
7700736850	C0041
7700745801	C0041
7700852719	C0039
7700853824	C0041
7700868591	C0255
7700869415	C0039
7700870067	C0233
7700870859	C0233
7700874423	C0255
7700874780	C0233
7700874795	C0255
7701041850	C0233
7701348231	C0043
7701348537	C0045
7701348915	C0046
7701349113	C0040
7701464673	C0040
7701616841	C0043
7704001363	C0040
7704001430	C0039
7704001430	C0039
7700588687RE	C0056

ROVER	CORAM
571160	C0105
571165	C0105
594269	C0105
594271	C0105
594272	C0105
22A1156	C0085
GRB232	C0091
GRB238	C0085
GRB239	C0090
GRB239	C0090
GRB240	C0078
GRB243	C0208
GRB527	C0078
GRB615	C0060
GRB90244	C0209
GRB90250	C0060
GRB90251	C0207
GRB90257	C0060
GRB90258	C0208
GRB90260	C0208
GRB90260	C0208
GRP207	C0235
GRP209	C0235

SAAB	CORAM
7194137	C0075
8704728	C0166
8732232	C0151
8745762	C0151

SEAT	CORAM
2141165	C0260
2141165	C0260
3309479	C0089
3938291	C0106
3941179	C0011
4439919	C0009
5888486	C0013
20141165	C0078
02T141170	C0259
085141165C	C0180
085141165E	C0180
085141165ES	C0180
141125316B	C0027
DG12621600	C0089
FA12621603	C0008
GE12621601	C0014
RF12531600	C0011
SE021125000A	C0106
SE021125000D	C0106
SE021125000E	C0011
SE022125316A	C0011
SE022125316B	C0106
XO39516630	C0011
XO39516640	C0027

SKODA	CORAM
2141165	C0260
2141165	C0260
2141170	C0260
2141170	C0260
111152180	C0087
111152180	C0087
111152182	C0087
113152180	C0087
113152180	C0088
969002514	C0096
02A141165GS	C0181
02T141165A	C0259
02T141165A	C0259
02T141165A	C0259
02T141165A	C0259
02T141165A	C0259
02T141165A	C0259
02T141170	C0259
441.0.5058-123.6	C0096
441.0.7058-123.6	C0096
SOSTITUITO DA C0236	C0231
SOSTITUITO DA C0237	C0232

REGGISPINTA DISTACCO FRIZIONE PER AUTO
CLUTCH RELEASE BEARING FOR CARS
BUTEE D'EMBRAYAGE POUR VOITURES
LISTA DI COMPARAZIONE - CROSS REFERENCES - LISTE CORRISPONDANCE

SUBARU	CORAM
30508-KA001	C0265
30508-KA040	C0265
33151-7800	C0235
83151-7800	C0235

SUZUKI	CORAM
09269-28004	C0266
09269-28005	C0266
09269-28006	C0266
09269-38001	C0235
09269-38002	C0235

TALBOT	CORAM
2041.14	C0068
2976200	C0053
4023100	C0043
5683500	C0058
15796000	C0043
15796000	C0043
41060200	C0057
56670600	C0059
71241715	C0153
75047000	C0074
7701348537	C0045
9750145080	C0059
40231D	C0043
49333G	C0043

TOYOTA	CORAM
31230-05020	C0247
31230-05021	C0247
31230-32060	C0247
31230-35070	C0248
31230-35080	C0248
31230-87280	C0264
90363-38001	C0235
90363-38009	C0235
90363-38019	C0235
90363-38043	C0235
90363-38056	C0235
90363-38084	C0235

TRABANT	CORAM
1800011108	C0094

VOLKSWAGEN	CORAM
2141165	C0260
2141165	C0260
2141170	C0260
2141170	C0260
002141165C	C0096
012141165 A-D	C0230
01E141165 A-B	C0230
020141165 B-H	C0078
020141165A/H	C0078
02A141165A	C0181
02A141165D	C0181
02A141165E	C0181
02A141165G	C0181
02T141165A	C0259
02T141165A	C0259
02T141165A	C0259
02T141165A	C0259
02T141165A	C0259
02T141165A	C0259
02T141165B	C0259
02T141165B	C0259
02T141165B	C0259
02T141165B	C0259
02T141165B	C0259
02T141165B	C0259
02T141170	C0259
084141165A-D	C0077
085141165C	C0180
085141165E	C0180
088141165A-C	C0076
088141165A-C	C0076
091141165A-D	C0076
111141165A	C0075
111141167C	C0075
113141165A-D	C0076
J31230-35070	C0248
SOSTITUITO DA C0236	C0231
SOSTITUITO DA C0237	C0232

VOLVO	CORAM
238082	C0242
293477	C0130
380569	C0107
672122	C0107
1220824	C0107
1220955	C0107
3209429	C0131
3209530	C0130
3293477	C0130
3296487	C0092
3411119	C0039
3467165	C0039
3549881	C0107
30819939.7	C0233

WARTBURG	CORAM
180093106	C0075
1800510100	C0165
3533009516	C0165

ZASTAVA	CORAM
4409361	C0010
4439919	C0009
7681283	C0011

ZAZ	CORAM
2451601180	C0229
4.01387E+12	C0240
24-1601180-02	C0228
45-43139911	C0228

REGGISPINTA DISTACCO FRIZIONE PER AUTO
CLUTCH RELEASE BEARING FOR CARS
BUTEE D'EMBRAYAGE POUR VOITURES
LISTA DI COMPARAZIONE - CROSS REFERENCES - LISTE CORRISPONDANCE

A.P BORG BECK	CORAM
HD 1001	C0005
HD 1003	C0035
HD 1004	C0037
HD 1011	C0100
HD 1013	C0092
HD 1015	C0031
HD 1016	C0047
HD 1020	C0076
HD 1021	C0107
HD 1032	C0003
HD 1033	C0006
HD 1036	C0013
HD 1036	C0023
HD 1039	C0053
HD 1043	C0043
HD 1046	C0045
HD 1048	C0064
HD 1049	C0061
HD 1050	C0058
HD 1050	C0068
HD 1051	C0010
HD 1052	C0013
HD 1052	C0014
HD 1053	C0009
HD 1062	C0221
HD 1066	C0080
HD 1068	C0061
HD 1073	C0013
HD 1212	C0004
HD 1213	C0030
HD 1214	C0045
HD 1215	C0081
HD 1216	C0065
HD 1219	C0107
HD 1222	C0083
HD 1225	C0101
HD 1231	C0045
HD 1232	C0077
HD 1233	C0056
HD 1234	C0102
HD 1235	C0103
HD 1236	C0076
HD 1238	C0166
HD 1243	C0008
HD 1244	C0046
HD 1245	C0046
HD 1251	C0235
HD 2034	C0071
HD 2037	C0074
HD 2043	C0108
HD 2043	C0109
HD 2044	C0104
HD 2073	C0074
HD 2186	C0032
HD 2209	C0076
HD 2219	C0078
HD 2220	C0108
HD 2303	C0027
HD 2304	C0089
HD 2337	C0091
HD 2338	C0074
HD 2341	C0036
HD 2404	C0011
HD 2430	C0105
HD 2432	C0093

HD 2464	C0028
HD 2466	C0088
HD 2482	C0074
HD 2483	C0073
HD 2932	C0067
HD 3255	C0085
HD 3264	C0235
HD 3267	C0202
HD 3268	C0235
HD 3270	C0047
HD 3272	C0153
HD 3323	C0190
HD 3493	C0205
HD 3682	C0048
HD 3720	C0085
HD 3744	C0207
HD 3821	C0208
HD 3822	C0235
HD 3831	C0079
HD 3853	C0209
HD 3866	C0090
HD 3869	C0059
HD 3872	C0068
HD 3875	C0220
HD 3880	C0049
HD 3883	C0130
HD 3940	C0095
HD 3948	C0253
HD 3990	C0039
HD 3994	C0092
HD 4330	C0040
HD 4567	C0078
HD 4579	C0235
HD 4599	C0069
HD 4601	C0025
HD 4621	C0075
HD 4920	C0041
HD 4923	C0223
HD 5002	C0180
HD 5005	C0050
HD 5096	C0060
HD 5130	C0151
HD 5164	C0022
HD 5165	C0024
HD 5245	C0226
HD 5246	C0226
HD 5312	C0207
HD 5337	C0215
HD 5340	C0222
HD 5476	C0026
HD 5509	C0029
HD 5509	C0128
HD 5526	C0230
HD 5529	C0087
HD 5616	C0224
HD 5618	C0248
HD 5691	C0230
HD 5693	C0181
HD 5748	C0096
HD 5799	C0131
HD 5806	C0226
HD 5807	C0226
HD 5848	C0236
HD 5859	C0099
HD 5890	C0247
HD 5911	C0239
HD 5918	C0072

HD 5967	C0066
HD 5971	C0233
HD 5973	C0106
HD 7550	C0066
HD 7606	C0237
HD5234	C0266
HD5343	C0220
HD5616	C0224

IRB	CORAM
223	C0085
224	C0078
232	C0022
101/2	C0008
127/187	C0180
149/80	C0043
151/127	C0045
151/153	C0030
151/181	C0013
155/92	C0009
165/107	C0089
167/111	C0071
167/131	C0040
168/112	C0014
169/113	C0010
170/120	C0058
170/132	C0069
176/128	C0039
176/130	C0046
184/146	C0076
185/147	C0077
186/148	C0101
187/149	C0079
188/150	C0059
189/151	C0074
191/154	C0092
193/156	C0103
196/159	C0037
198/161	C0073
199/162	C0032
200/163	C0049
201/164	C0065
202/165	C0068
204/167	C0230
205/168	C0027
206/169	C0090
207/170	C0208
212/175	C0104
213/176	C0028
214/177	C0029
216/179	C0024
217/180	C0095
221/184	C0056
227/187	C0180
228/186	C0060
229/188	C0004
235/194	C0151

REGGISPINTA DISTACCO FRIZIONE PER AUTO
CLUTCH RELEASE BEARING FOR CARS
BUTEE D'EMBRAYAGE POUR VOITURES
LISTA DI COMPARAZIONE - CROSS REFERENCES - LISTE CORRISPONDANCE

LORETT	CORAM
CR1101	C0035
CR1102	C0037
CR1103	C0036
CR1106	C0027
CR1108	C0208
CR1110	C0085
CR1113	C0090
CR1118	C0101
CR1119	C0103
CR1120	C0080
CR1121	C0081
CR1122	C0083
CR1123	C0045
CR1124	C0046
CR1125	C0059
CR1126	C0079
CR1127	C0236
CR1128	C0060
CR1129	C0237
CR1131	C0003
CR1132	C0017
CR1133	C0005
CR1134	C0004
CR1135	C0006
CR1136	C0009
CR1137	C0010
CR1138	C0018
CR1139	C0007
CR1141	C0008
CR1144	C0013
CR1145	C0014
CR1146	C0023
CR1148	C0011
CR1149	C0024
CR1150	C0066
CR1151	C0022
CR1152	C0099
CR1153	C0250
CR1155	C0234
CR1156	C0251
CR1157	C0156
CR1161	C0074
CR1162	C0073
CR1165	C0071
CR1166	C0104
CR1167	C0108
CR1167	C0109
CR1170	C0028
CR1171	C0029
CR1172	C0129
CR1175	C0021
CR1182	C0030
CR1183	C0032
CR1187	C0105
CR1189	C0092
CR1191	C0048
CR1192	C0049
CR1193	C0151
CR1194	C0093
CR1195	C0095
CR1200	C0050
CR1202	C0065
CR1205	C0067
CR1206	C0069
CR1207	C0068

CR1212	C0233
CR1214	C0040
CR1215	C0039
CR1216	C0056
CR1218	C0089
CR1219	C0106
CR1222	C0043
CR1225	C0059
CR1231	C0087
CR1232	C0088
CR1233	C0096
CR1235	C0041
CR1237	C0181
CR1238	C0230
CR1239	C0180
CR1240	C0075
CR1242	C0077
CR1244	C0078
CR1245	C0076
CR1252	C0157
CR1253	C0072
CR1260	C0107
CR1261	C0130
CR1263	C0243
CR1373	C0025
CR1389	C0026

LUK	CORAM
500 0001 10	C0092
500 0001 20	C0092
500 0010 10	C0046
500 0013 10	C0065
500 0014 30	C0061
500 0017 10	C0068
500 0017 11	C0068
500 0019 10	C0067
500 0020 10	C0003
500 0020 30	C0003
500 0021 30	C0013
500 0021 30	C0023
500 0022 30	C0006
500 0024 10	C0013
500 0024 30	C0013
500 0027 10	C0004
500 0027 11	C0004
500 0027 30	C0004
500 0028 10	C0009
500 0028 30	C0027
500 0032 20	C0100
500 0033 20	C0102
500 0035 10	C0101
500 0037 20	C0103
500 0040 10	C0043
500 0071 10	C0074
500 0075 30	C0030
500 0095 10	C0080
500 0097 10	C0081
500 0099 30	C0045
500 0104 50	C0085
500 0107 30	C0036
500 0108 20	C0035
500 0127 50	C0235
500 0132 20	C0075
500 0141 10	C0077
500 0143 10	C0071

500 0143 11	C0071
500 0146 10	C0076
500 0149 20	C0107
500 0156 30	C0045
500 0157 30	C0056
500 0162 10	C0078
500 0166 10	C0048
500 0167 10	C0047
500 0168 20	C0037
500 0168 30	C0037
500 0169 10	C0076
500 0171 10	C0073
500 0172 10	C0076
500 0172 11	C0076
500 0172 20	C0076
500 0174 30	C0046
500 0176 60	C0235
500 0178 10	C0087
500 0178 30	C0087
500 0179 30	C0013
500 0180 30	C0032
500 0184 10	C0104
500 0185 20	C0150
500 0191 60	C0221
500 0202 10	C0010
500 0202 11	C0011
500 0202 30	C0011
500 0212 10	C0095
500 0221 10	C0108
500 0221 20	C0108
500 0223 30	C0004
500 0225 10	C0059
500 0225 30	C0059
500 0227 60	C0235
500 0231 10	C0108
500 0231 11	C0108
500 0231 50	C0108
500 0231 50	C0109
500 0232 50	C0166
500 0235 60	C0226
500 0236 60	C0226
500 0237 60	C0215
500 0245 10	C0069
500 0249 11	C0078
500 0250 10	C0049
500 0250 20	C0049
500 0254 10	C0039
500 0254 30	C0039
500 0275 30	C0040
500 0276 30	C0041
500 0286 30	C0079
500 0291 20	C0130
500 0296 60	C0220
500 0306 10	C0087
500 0306 11	C0087
500 0307 60	C0209
500 0309 10	C0022
500 0309 30	C0022
500 0311 10	C0180
500 0319 10	C0028
500 0320 10	C0050
500 0321 10	C0151
500 0322 10	C0230
500 0322 11	C0230
500 0323 21	C0107
500 0325 60	C0266
500 0327 10	C0060

REGGISPINTA DISTACCO FRIZIONE PER AUTO
CLUTCH RELEASE BEARING FOR CARS
BUTEE D'EMBRAYAGE POUR VOITURES
LISTA DI COMPARAZIONE - CROSS REFERENCES - LISTE CORRISPONDANCE

500 0327 30	**C0060**
500 0331 30	**C0131**
500 0340 50	**C0235**
500 0341 50	**C0235**
500 0344 50	**C0105**
500 0349 50	**C0085**
500 0352 50	**C0208**
500 0353 50	**C0235**
500 0354 30	**C0025**
500 0357 30	**C0006**
500 0358 30	**C0032**
500 0359 50	**C0091**
500 0365 30	**C0090**
500 0365 50	**C0090**
500 0373 30	**C0106**
500 0401 10	**C0024**
500 0401 30	**C0024**
500 0405 30	**C0025**
500 0409 30	**C0011**
500 0410 10	**C0230**
500 0413 50	**C0235**
500 0414 60	**C0223**
500 0429 20	**C0025**
500 0439 20	**C0029**
500 0440 10	**C0181**
500 0462 30	**C0237**
500 0464 60	**C0222**
500 0469 00	**C0165**
500 0470 00	**C0165**
500 0471 00	**C0094**
500 0478 10	**C0096**
500 0490 60	**C0207**
500 0494 60	**C0226**
500 0497 60	**C0226**
500 0510 30	**C0069**
500 0515 10	**C0072**
500 0519 60	**C0235**
500 0535 10	**C0239**
500 0540 30	**C0234**
500 0557 60	**C0226**
500 0604 60	**C0265**
500 0635 30	**C0026**
500 0638 20	**C0029**
500 0638 20	**C0238**
500 0639 60	**C0224**
500 0671 10	**C0099**
500 0671 30	**C0099**
500 0681 60	**C0220**
500 0682 60	**C0222**
500 0687 10	**C0225**
500 0725 10	**C0101**
500 0728 10	**C0255**
500 0732 30	**C0251**
500 0742 10	**C0099**
500 0758 30	**C0233**
500 0782 60	**C0264**
500 0924 10	**C0243**
500 1005 10	**C0259**
500 1048 00	**C0250**
500 1065 20	**C0259**
500 1070 20	**C0260**
618 1222 00	**C0047**
619 0094 60	**C0235**
619 1004 60	**C0209**
620 0337 00	**C0050**
620 0443 06	**C0065**
620 0779 00	**C0040**

620 0844 00	**C0011**
620 0859 00	**C0220**
620 1399 00	**C0050**
620 1523 00	**C0215**
620 1524 00	**C0215**
621 1344 09	**C0078**
621 1346 09	**C0078**
622 0245 06	**C0041**
622 0419 06	**C0235**
622 0420 00	**C0235**
622 0459 00	**C0013**
622 0541 00	**C0059**
622 0568 00	**C0074**
622 0712 00	**C0092**
622 1522 00	**C0215**
622 1527 00	**C0215**
622 1607 00	**C0160**
622 1607 09	**C0160**
622 1626 60	**C0226**
622 1639 00	**C0208**
622 1657 00	**C0215**
622 1664 00	**C0095**
622 1671 00	**C0208**
622 1869 60	**C0215**
623 0228 00	**C0095**
623 0228 06	**C0095**
623 0755 00	**C0022**
623 0856 00	**C0092**
623 1011 60	**C0215**
623 1557 00	**C0092**
623 1625 60	**C0226**
623 1629 60	**C0235**
623 1640 00	**C0208**
623 1666 00	**C0095**
623 1954 60	**C0226**
623 1985 60	**C0221**
624 0224 36	**C0045**
624 0531 00	**C0105**
624 0614 00	**C0050**
624 0655 00	**C0230**
624 0793 00	**C0237**
624 0794 00	**C0237**
624 0795 00	**C0237**
624 0799 00	**C0040**
624 0819 00	**C0230**
624 0830 00	**C0076**
624 0838 00	**C0076**
624 1029 00	**C0105**
624 1342 00	**C0237**
624 1424 00	**C0011**
624 1806 00	**C0105**
627 1877 00	**C0025**
628 2012 60	**C0221**
633 0080 00	**C0095**
633 0080 06	**C0095**
QH	**CORAM**
CC14	**C0190**
CCT101	**C0235**
CCT105	**C0048**
CCT110	**C0013**
CCT110	**C0023**
CCT124	**C0105**
CCT132	**C0074**
CCT133	**C0104**

CCT134	**C0073**
CCT137	**C0045**
CCT138	**C0036**
CCT141	**C0101**
CCT143	**C0030**
CCT144	**C0092**
CCT145	**C0080**
CCT146	**C0043**
CCT150	**C0004**
CCT151	**C0009**
CCT151	**C0027**
CCT153	**C0014**
CCT164	**C0077**
CCT167	**C0081**
CCT171	**C0058**
CCT171	**C0068**
CCT172	**C0071**
CCT186	**C0076**
CCT197	**C0003**
CCT201	**C0065**
CCT202	**C0069**
CCT206	**C0040**
CCT206	**C0045**
CCT207	**C0056**
CCT251	**C0166**
CCT256	**C0207**
CCT257	**C0205**
CCT258	**C0049**
CCT261	**C0220**
CCT262	**C0046**
CCT267	**C0078**
CCT268	**C0090**
CCT269	**C0028**
CCT270	**C0039**
CCT271	**C0059**
CCT271	**C0060**
CCT280	**C0208**
CCT281	**C0130**
CCT291	**C0079**
CCT292	**C0092**
CCT296	**C0037**
CCT297	**C0209**
CCT298	**C0223**
CCT302	**C0102**
CCT303	**C0108**
CCT303	**C0109**
CCT304	**C0180**
CCT305	**C0215**
CCT308	**C0235**
CCT314	**C0050**
CCT315	**C0060**
CCT316	**C0222**
CCT321	**C0067**
CCT322	**C0106**
CCT325	**C0083**
CCT327	**C0093**
CCT329	**C0029**
CCT329	**C0128**
CCT330	**C0209**
CCT331	**C0151**
CCT332	**C0025**
CCT334	**C0103**
CCT335	**C0131**
CCT336	**C0011**
CCT340	**C0095**
CCT341	**C0041**
CCT347	**C0235**

REGGISPINTA DISTACCO FRIZIONE PER AUTO
CLUTCH RELEASE BEARING FOR CARS
BUTEE D'EMBRAYAGE POUR VOITURES
LISTA DI COMPARAZIONE - CROSS REFERENCES - LISTE CORRISPONDANCE

CCT352	**C0022**
CCT368	**C0239**
CCT379	**C0237**
CCT38	**C0085**
CCT407	**C0024**
CCT408	**C0181**
CCT529	**C0230**
CCT54	**C0235**
CCT578	**C0236**
CCT607	**C0258**
CCT619	**C0257**
CCT64	**C0047**
CCT70	**C0235**
CCT702	**C0035**
CCT71	**C0075**
CCT710	**C0006**
CCT76	**C0089**
CCT78	**C0202**
CCT89	**C0153**
CCT93	**C0221**
CCT99	**C0107**

SACHS	**CORAM**
1850282049	**C0005**
1850282082	**C0008**
1850282087	**C0006**
1850282106	**C0003**
1850282123	**C0053**
1850282127	**C0013**
1850282127	**C0023**
1850282141	**C0064**
1850282143	**C0080**
1850282156	**C0014**
1850282156	**C0031**
1850282164	**C0009**
1850282185	**C0028**
1850282189	**C0004**
1850282193	**C0065**
1850282197	**C0068**
1850282198	**C0083**
1850282602	**C0045**
1850282605	**C0030**
1850282607	**C0067**
1850282620	**C0089**
1850282621	**C0056**
1850282628	**C0046**
1850282635	**C0032**
1850282639	**C0105**
1850282640	**C0104**
1850282649	**C0069**
1850282654	**C0040**
1850282657	**C0059**
1850282659	**C0039**
1850282661	**C0041**
1850282661	**C0106**
1850282663	**C0079**
1850282664	**C0106**
1850282666	**C0022**
1850282706	**C0085**
1850282709	**C0235**
1850282712	**C0235**
1850282744	**C0166**
1859102031	**C0061**
1859900001	**C0094**
1863805001	**C0235**
1863810001	**C0221**
3000654001	**C0160**
3000743001	**C0251**
3151001001	**C0035**
3151010001	**C0037**
3151035231	**C0101**
3151037131	**C0077**
3151039131	**C0100**
3151040131	**C0102**
3151047231	**C0103**
3151051031	**C0150**
3151065031	**C0025**
3151069031	**C0093**
3151073031	**C0071**
3151078001	**C0130**
3151089001	**C0048**
3151093041	**C0190**
3151104001	**C0092**
3151122031	**C0095**
3151130141	**C0011**
3151130241	**C0010**
3151130241	**C0011**
3151133331	**C0092**
3151140001	**C0047**
3151151141	**C0043**
3151151241	**C0043**
3151158031	**C0107**
3151175031	**C0050**
3151180031	**C0181**
3151180131	**C0181**
3151180231	**C0181**
3151190031	**C0107**
3151192041	**C0104**
3151193041	**C0076**
3151213031	**C0026**
3151231031	**C0101**
3151270503	**C0260**
3151271741	**C0240**
3151272905	**C0259**
3151272935	**C0259**
3151276501	**C0066**
3151802002	**C0078**
3151802003	**C0078**
3151803001	**C0074**
3151803003	**C0073**
3151804141	**C0036**
3151807001	**C0226**
3151808001	**C0215**
3151809001	**C0049**
3151809002	**C0151**
3151810004	**C0108**
3151810004	**C0109**
3151811001	**C0220**
3151812001	**C0087**
3151812001	**C0088**
3151814001	**C0131**
3151815001	**C0040**
3151816001	**C0180**
3151819001	**C0266**
3151820001	**C0209**
3151821002	**C0238**
3151822032	**C0230**
3151823001	**C0128**
3151826001	**C0060**
3151828001	**C0223**
3151833001	**C0209**
3151835001	**C0208**
3151836001	**C0022**
3151837001	**C0024**
3151837002	**C0024**
3151838001	**C0069**
3151839001	**C0058**
3151839001	**C0068**
3151840001	**C0027**
3151841001	**C0059**
3151842001	**C0046**
3151843001	**C0230**
3151846001	**C0040**
3151847001	**C0039**
3151848001	**C0081**
3151852001	**C0090**
3151856001	**C0056**
3151857001	**C0222**
3151858001	**C0224**
3151859001	**C0041**
3151867001	**C0207**
3151868001	**C0165**
3151869001	**C0165**
3151871001	**C0060**
3151874001	**C0237**
3151874002	**C0236**
3151881001	**C0248**
3151883001	**C0224**
3151888001	**C0091**
3151889001	**C0072**
3151891001	**C0239**
3151892001	**C0096**
3151895001	**C0099**
3151895002	**C0099**
3151903001	**C0234**
3151994301	**C0243**
3151996401	**C0264**
3151997401	**C0265**
3151997501	**C0255**
3151998701	**C0233**
3151998801	**C0225**
3159140037	**C0075**
3189000536	**C0260**
3189000931	**C0259**
3515839001	**C0058**

SKF	**CORAM**
609535	**C0018**
609553C	**C0017**
VKC2006	**C0047**
VKC2007	**C0005**
VKC2022	**C0006**
VKC2025	**C0075**
VKC2028	**C0085**
VKC2031	**C0003**
VKC2045	**C0092**
VKC2050	**C0064**
VKC2051	**C0058**
VKC2051	**C0068**
VKC2054	**C0080**
VKC2058	**C0035**
VKC2059	**C0053**
VKC2061	**C0100**
VKC2064	**C0013**
VKC2064	**C0023**
VKC2064	**C0031**
VKC2065	**C0107**
VKC2075	**C0057**

REGGISPINTA DISTACCO FRIZIONE PER AUTO
CLUTCH RELEASE BEARING FOR CARS
BUTEE D'EMBRAYAGE POUR VOITURES
LISTA DI COMPARAZIONE - CROSS REFERENCES - LISTE CORRISPONDANCE

VKC2080	**C0043**
VKC2083	**C0037**
VKC2091	**C0076**
VKC2095	**C0009**
VKC2095	**C0027**
VKC2107	**C0088**
VKC2108	**C0046**
VKC2111	**C0065**
VKC2113	**C0004**
VKC2114	**C0081**
VKC2115	**C0045**
VKC2120	**C0101**
VKC2121	**C0045**
VKC2122	**C0014**
VKC2123	**C0036**
VKC2125	**C0077**
VKC2126	**C0102**
VKC2144	**C0074**
VKC2146	**C0067**
VKC2150	**C0056**
VKC2151	**C0103**
VKC2159	**C0078**
VKC2161	**C0071**
VKC2163	**C0073**
VKC2164	**C0104**
VKC2165	**C0108**
VKC2165	**C0109**
VKC2168	**C0011**
VKC2169	**C0069**
VKC2170	**C0025**
VKC2183	**C0099**
VKC2184	**C0093**
VKC2184	**C0095**
VKC2186	**C0048**
VKC2189	**C0040**
VKC2190	**C0041**
VKC2191	**C0039**
VKC2193	**C0059**
VKC2194	**C0083**
VKC2195	**C0078**
VKC2196	**C0079**
VKC2202	**C0095**
VKC2213	**C0049**
VKC2215	**C0050**
VKC2216	**C0060**
VKC2217	**C0090**
VKC2219	**C0106**
VKC2220	**C0180**
VKC2224	**C0032**
VKC2225	**C0105**
VKC2232	**C0166**
VKC2233	**C0087**
VKC2234	**C0130**
VKC2235	**C0131**
VKC2236	**C0029**
VKC2238	**C0151**
VKC2239	**C0236**
VKC2240	**C0190**
VKC2241	**C0181**
VKC2247	**C0029**
VKC2248	**C0021**
VKC2248	**C0028**
VKC2248	**C0128**
VKC2433	**C0233**
VKC2501	**C0024**
VKC2502	**C0202**
VKC2516	**C0066**

VKC2520	**C0225**
VKC2523	**C0243**
VKC2525	**C0089**
VKC2530	**C0153**
VKC2533	**C0096**
VKC2535	**C0029**
VKC2535	**C0238**
VKC2536	**C0129**
VKC2537	**C0237**
VKC2538	**C0208**
VKC2546	**C0239**
VKC2548	**C0072**
VKC2601	**C0230**
VKC2976	**C0030**
VKC3205	**C0235**
VKC3500	**C0221**
VKC3505	**C0235**
VKC3507	**C0226**
VKC3510	**C0226**
VKC3515	**C0215**
VKC3542	**C0209**
VKC3551	**C0223**
VKC3555	**C0222**
VKC3560	**C0220**
VKC3567	**C0266**
VKC3600	**C0226**
VKC3602	**C0224**
VKC3609	**C0224**
VKC3617	**C0207**
VKC3629	**C0265**
VKC3668	**C0264**
VKC5168	**C0010**
VKC5169	**C0068**
VKV2168	**C0011**
VKV2186	**C0048**

SNT	**CORAM**
190030	**C0021**
190040	**C0017**
190728	**C0166**
370057	**C0007**
370092	**C0014**
370094	**C0006**
370112	**C0003**
370115	**C0008**
370214	**C0009**
370230	**C0099**
370318	**C0010**
370400	**C0047**
370415	**C0049**
370429	**C0050**
370552	**C0041**
370700	**C0075**
370718	**C0076**
370726	**C0078**
370750	**C0092**
370755	**C0093**
370760	**C0095**
370767	**C0150**
370805	**C0035**
370810	**C0036**
370821	**C0037**
370915	**C0105**
370930	**C0029**
370942	**C0032**

375315	**C0069**
375328	**C0065**
375460	**C0074**
375462	**C0073**
375466	**C0104**
375468	**C0108**
375624	**C0080**
375780	**C0101**
375782	**C0103**
375870	**C0087**
375874	**C0096**
375883	**C0151**
370005/S	**C0020**
370150/A	**C0013**
370220/A	**C0004**
370228/A	**C0027**
370317/A	**C0106**
370317/A	**C0107**
370319/A	**C0022**
370321/A	**C0022**
370334/A	**C0024**
370336/A	**C0011**
370411/37	**C0048**
370507/A	**C0039**
370535/A	**C0045**
370548/A	**C0046**
370550/A	**C0040**
370608/A	**C0043**
370623/A	**C0059**
370714/A	**C0230**
370722/A	**C0077**
370775 A	**C0130**
375310/A	**C0058**
375310/P	**C0068**
375341/A	**C0060**
375453/A	**C0071**
375884/NE	**C0180**
375885/NE	**C0181**

VALEO FRANCIA	**CORAM**
6764	**C0010**
6809	**C0024**
9141	**C0025**
79053	**C0043**
79937	**C0060**
94230	**C0069**
229060	**C0095**
262406	**C0083**
262433	**C0045**
262583	**C0004**
262628	**C0030**
262652	**C0035**
262828	**C0013**
262828	**C0014**
262869	**C0045**
263422	**C0032**
263446	**C0046**
263530	**C0037**
263603	**C0071**
263888	**C0081**
264169	**C0011**
264170	**C0011**
264218	**C0036**
264315	**C0013**
264390	**C0013**

REGGISPINTA DISTACCO FRIZIONE PER AUTO
CLUTCH RELEASE BEARING FOR CARS
BUTEE D'EMBRAYAGE POUR VOITURES
LISTA DI COMPARAZIONE - CROSS REFERENCES - LISTE CORRISPONDANCE

264390	**C0023**
264390	**C0031**
264630	**C0045**
264663	**C0130**
264918	**C0004**
264969	**C0013**
265147	**C0041**
265172	**C0059**
265254	**C0009**
265315	**C0040**
265499	**C0046**
265523	**C0040**
266121	**C0039**
266155	**C0081**
266272	**C0090**
266402	**C0079**
266518	**C0046**
271471	**C0061**
273568	**C0061**
275853	**C0058**
275853	**C0068**
275854	**C0080**
275858	**C0064**
275860	**C0053**
277814	**C0005**
279088	**C0022**
279120	**C0025**
279162	**C0028**
279423	**C0131**
279427	**C0060**
279431	**C0025**
279434	**C0041**
279505	**C0030**
279523	**C0022**
279597	**C0056**
279611	**C0045**
279612	**C0024**
279673	**C0106**
279675	**C0011**
279686	**C0027**
279687	**C0011**
279695	**C0067**
279697	**C0065**
279792	**C0013**
279793	**C0003**
279795	**C0006**
279797	**C0008**
282660	**C0022**
282671	**C0022**
352369	**C0221**
352371	**C0235**
352379	**C0215**
355033	**C0048**
355078	**C0069**
355538	**C0076**
355543	**C0092**
355544	**C0075**
355562	**C0078**
355589	**C0108**
355591	**C0093**
355594	**C0095**
355600	**C0049**
355610	**C0104**
357218	**C0048**
357511	**C0047**
357522	**C0073**
357524	**C0108**

357524	**C0109**
357577	**C0180**
357579	**C0050**
357804	**C0102**
358079	**C0107**
358080	**C0092**
358230	**C0100**
358239	**C0047**
358250	**C0101**
358252	**C0103**
358273	**C0076**
358275	**C0074**
358284	**C0073**
358344	**C0108**
358359	**C0166**
358584	**C0076**
359209	**C0085**
359217	**C0235**
359221	**C0235**
359227	**C0074**
363989	**C0068**
472154	**C0089**
801005	**C0040**
801009	**C0022**
801075	**C0045**
801211	**C0095**
801248	**C0041**
801255	**C0105**
801324	**C0074**
801352	**C0237**
801409	**C0026**
801414	**C0160**
801428	**C0041**
801430	**C0237**
801431	**C0041**
801456	**C0237**
801457	**C0208**
801536	**C0041**
801554	**C0237**
801587	**C0215**
801588	**C0215**
801589	**C0215**
801590	**C0215**
801591	**C0215**
801592	**C0215**
801727	**C0215**
804001	**C0004**
804002	**C0011**
804003	**C0230**
804004	**C0050**
804005	**C0181**
804006	**C0236**
804007	**C0041**
804010	**C0029**
804010	**C0238**
804012	**C0151**
804013	**C0060**
804014	**C0207**
804015	**C0105**
804019	**C0092**
804022	**C0230**
804036	**C0066**
804038	**C0099**
804039	**C0208**
804040	**C0221**
804043	**C0107**
804095	**C0215**

804097	**C0237**
804098	**C0234**
804100	**C0237**
804101	**C0251**
804102	**C0233**
804188	**C0243**
805072	**C0041**
806507	**C0026**
27916220	**C0128**
262652JO	**C0035**
264573ZO	**C0037**
279205GO	**C0036**
279675NO	**C0011**
355533XO	**C0077**
358030XO	**C0035**

VALEO ITALIA	**CORAM**
K060S	**C0030**
K135S	**C0024**
R001	**C0031**
R005	**C0061**
R007	**C0061**
R016	**C0069**
R017	**C0080**
R033	**C0003**
R034	**C0006**
R037	**C0013**
R038	**C0043**
R041	**C0035**
R045	**C0030**
R047	**C0043**
R048	**C0065**
R049	**C0067**
R051	**C0081**
R052	**C0254**
R053	**C0083**
R054	**C0045**
R055	**C0045**
R059	**C0056**
R061	**C0032**
R062	**C0014**
R064	**C0046**
R066	**C0071**
R074	**C0037**
R075	**C0046**
R076	**C0046**
R079	**C0130**
R080	**C0013**
R080	**C0023**
R082	**C0004**
R083	**C0009**
R083	**C0027**
R083	**C0085**
R085	**C0041**
R086	**C0059**
R089	**C0040**
R090	**C0068**
R096	**C0010**
R099	**C0040**
R101	**C0025**
R106	**C0046**
R107	**C0039**
R108	**C0079**
R109	**C0045**
R111	**C0036**

REGGISPINTA DISTACCO FRIZIONE PER AUTO
CLUTCH RELEASE BEARING FOR CARS
BUTEE D'EMBRAYAGE POUR VOITURES
LISTA DI COMPARAZIONE - CROSS REFERENCES - LISTE CORRISPONDANCE

R112	**C0090**
R118	**C0059**
R129	**C0059**
R130	**C0022**
R136	**C0068**
R146	**C0022**
R150	**C0060**
R156	**C0131**
R157	**C0011**
R158	**C0024**
R160	**C0106**
R161	**C0060**
R164	**C0039**
R168	**C0058**
R177	**C0004**
R186	**C0039**
R187	**C0025**
R196	**C0028**
R201	**C0026**
R203	**C0105**
R204	**C0099**
R205	**C0077**
R206	**C0180**
R207	**C0076**
R208	**C0107**
R210	**C0101**
R211	**C0103**
R212	**C0048**
R213	**C0049**
R214	**C0050**
R215	**C0047**
R216	**C0095**
R217	**C0092**
R218	**C0074**
R219	**C0066**
R220	**C0104**
R223	**C0237**
R227	**C0041**
R231	**C0234**
R232	**C0048**
R235	**C0237**
R239	**C0236**
R249	**C0099**

REGGISPINTA DISTACCO FRIZIONE PER TRATTORI
CLUTCH RELEASE BEARING FOR AGRICULTURAL MACHINES
BUTEE D'EMBRAYAGE POUR MACHINES AGRICOLES

AGRIA

MODELLO	DIMENSIONI	ANNO	RIF ORIGINALE	RIF CORAM	NOTE
DUMPER					
DH 15	36x68x18,9		5119290	**C0018**	

AGRIFULL

MODELLO	DIMENSIONI	ANNO	RIF ORIGINALE	RIF CORAM	NOTE
55 - 80					
55-46 - 55-66	50x90x22		5122028	**C0122**	
60 II F, DT	50x90x22		5122028	**C0122**	
65-46	50x90x22		5122028	**C0122**	
70 II F, DT	50x90x22		5122028	**C0122**	
80 II F, DT	50x90x22		5122028	**C0122**	
8045 - 80105					
8045	50x90x22		5122028	**C0122**	
8050 - 8055	50x90x22		5122028	**C0122**	
8060 - 8065	50x90x22		5122028	**C0122**	
8075	50x90x22		5122028	**C0122**	
DERBY					
60 - 80	50x90x22		5122028	**C0122**	
GRISO					
70 - 750	50x90x22		5122028	**C0122**	
JOLLY					
50	50x90x22		5122028	**C0122**	
RODEO					
90 - 95	50x90x22	01/76	5122028	**C0122**	
TORNADO					
80	50x90x22	01/76	5122028	**C0122**	

REGGISPINTA DISTACCO FRIZIONE PER TRATTORI
CLUTCH RELEASE BEARING FOR AGRICULTURAL MACHINES
BUTEE D'EMBRAYAGE POUR MACHINES AGRICOLES

follows AGRIFULL

MODELLO	DIMENSIONI	ANNO	RIF ORIGINALE	RIF CORAM	NOTE
TOSELLI					
60 - 70 - 85	50x90x22	01/76	5122028	**C0122**	
68 e derivati	36x68x18,9		5119290	**C0018**	
233	52,4x82,5x20,4		715590040	**C0125**	
266 - 266 C CINGOLI	52,4x82,5x20,4		715590040	**C0125**	
288	52,4x82,5x20,4		715590040	**C0125**	
340	52,4x82,5x20,4		715590040	**C0125**	
350	52,4x82,5x20,4		715590040	**C0125**	
C 345	52,4x82,5x20,4		715590040	**C0125**	
C 355 e derivati	52,4x82,5x20,4		715590040	**C0125**	
CF 350 L	52,4x82,5x20,4		715590040	**C0125**	
EURO 60	52,4x82,5x20,4		715590040	**C0125**	
ALLIS					
D					
10 - 12	52,4x82,5x20,4		A35891	**C0125**	
H					
H 3 - HD 3	52,4x82,5x20,4		A35891	**C0125**	
BERTOLINI					
412					
T	36x68x18,9		81.2794.00	**C0018**	
BM					
4 NAFTA	36x68x18,9		81.2794.00	**C0018**	

REGGISPINTA DISTACCO FRIZIONE PER TRATTORI
CLUTCH RELEASE BEARING FOR AGRICULTURAL MACHINES
BUTEE D'EMBRAYAGE POUR MACHINES AGRICOLES

CASE IH

MODELLO	DIMENSIONI	ANNO	RIF ORIGINALE	RIF CORAM	NOTE
900 - 1100					
970	65x96,6x19/23		01260463	**C0241**	
970	106x140x21/25		04334402	**C0245**	
CS..					
CS42 - CS48 - CS55	65x96,6x19/23		01260463	**C0241**	
CS42 - CS48 - CS55	106x140x21/25		04334402	**C0245**	
CS58 - CS60 - CS64	65x96,6x19/23		01260463	**C0241**	
CS58 - CS60 - CS64	106x140x21/25		04334402	**C0245**	
CS68 - CS70 - CS75	65x96,6x19/23		01260463	**C0241**	
CS68 - CS70 - CS75	106x140x21/25		04334402	**C0245**	
CS78 - CS86 - CS94	65x96,6x19/23		01260463	**C0241**	
CS78 - CS86 - CS94	106x140x21/25		04334402	**C0245**	

DEUTZ-FAHR

D 5000 - D 6000					
D 6006F - D 6806F - D 6807	65x96,6x19/23		01260463	**C0241**	
D 7000 - D 8000					
D 7006F - D 7007	65x96,6x19/23		01260463	**C0241**	
D 7206F - D 7207	65x96,6x19/23		01260463	**C0241**	
D 7505F - D 7505U - D 7506 - D 7506U	65x96,6x19/23		01260463	**C0241**	
D 7807F	65x96,6x19/23		01260463	**C0241**	
D 8006F - D 8006U	65x96,6x19/23		01260463	**C0241**	
D 9000 - D 13000					
D 10006F	65x96,6x19/23		01260463	**C0241**	
D 9005F - D 9006F					
D 9005F - D 9006F	65x96,6x19/23		01260463	**C0241**	

REGGISPINTA DISTACCO FRIZIONE PER TRATTORI
CLUTCH RELEASE BEARING FOR AGRICULTURAL MACHINES
BUTEE D'EMBRAYAGE POUR MACHINES AGRICOLES

EICHER

MODELLO	DIMENSIONI	ANNO	RIF ORIGINALE	RIF CORAM	NOTE
365 - 666					
635	65x101,6x11/17,5		706629	**C0252**	
642	65x101,6x11/17,5		706629	**C0252**	
645	65x101,6x11/17,5		706629	**C0252**	
648	65x101,6x11/17,5		706629	**C0252**	
365 S	65x96,6x19/23		01260463	**C0241**	
365 S	106x140x21/25		04334402	**C0245**	
565 S - 566 AS	65x96,6x19/23		01260463	**C0241**	
565 S - 566 AS	106x140x21/25		04334402	**C0245**	
656 S - 666 AS	65x96,6x19/23		01260463	**C0241**	
656 S - 666 AS	106x140x21/25		04334402	**C0245**	
3007 - 3088					
3007 - 3008 - 3009	65x101,6x11/17,5		706629	**C0252**	
3010 - 3015 - 3016	65x101,6x11/17,5		706629	**C0252**	
3048 ,S,AS	65x96,6x19/23		01260463	**C0241**	
3048 ,S,AS	106x140x21/25		04334402	**C0245**	
3056 ,S,AS	65x96,6x19/23		01260463	**C0241**	
3056 ,S,AS	106x140x21/25		04334402	**C0245**	
3066 ,S,SA	65x96,6x19/23	-12/83	01260463	**C0241**	
3066 ,S,SA	106x140x21/25	-12/83	04334402	**C0245**	
3075 S	65x96,6x19/23		01260463	**C0241**	
3075 S	106x140x21/25		04334402	**C0245**	
3085 S	65x96,6x19/23	01/84	01260463	**C0241**	
3085 S	106x140x21/25	01/84	04334402	**C0245**	
3088 S,AS	65x96,6x19/23		01260463	**C0241**	
3088 S,AS	106x140x21/25		04334402	**C0245**	
3251 - 3660					
3253-3254A-3255-3256A-3257-3258	65x96,6x19/23		01260463	**C0241**	
3253-3254A-3255-3256A-3257-3258	106x140x21/25		04334402	**C0245**	
3353-3354A-3355-3356A-3357-3358AS	65x96,6x19/23		01260463	**C0241**	
3353-3354A-3355-3356A-3357-3358AS	106x140x21/25		04334402	**C0245**	
3422S-3453-3457-3458	65x96,6x19/23		01260463	**C0241**	
3422S-3453-3457-3458	106x140x21/25		04334402	**C0245**	
3553-3555-3556A-3557A-3558	65x96,6x19/23		01260463	**C0241**	
3553-3555-3556A-3557A-3558	106x140x21/25		04334402	**C0245**	
3655-3656-3657-3658-3660	65x96,6x19/23		01260463	**C0241**	
3655-3656-3657-3658-3660	106x140x21/25		04334402	**C0245**	
3705 - 4072					
3709-3710-3711-3712	65x96,6x19/23		01260463	**C0241**	
3709-3710-3711-3712	106x140x21/25		04334402	**C0245**	
3757-3758-3759	65x96,6x19/23		01260463	**C0241**	
3757-3758-3759	106x140x21/25		04334402	**C0245**	
3760-3761-3762-3763-3764	65x96,6x19/23		01260463	**C0241**	
3760-3761-3762-3763-3764	106x140x21/25		04334402	**C0245**	
3765-3766-3767-3768	65x96,6x19/23		01260463	**C0241**	
3765-3766-3767-3768	106x140x21/25		04334402	**C0245**	
4072 ,A	65x96,6x19/23		01260463	**C0241**	
4072 ,A	106x140x21/25		04334402	**C0245**	

REGGISPINTA DISTACCO FRIZIONE PER TRATTORI
CLUTCH RELEASE BEARING FOR AGRICULTURAL MACHINES
BUTEE D'EMBRAYAGE POUR MACHINES AGRICOLES

follows EICHER

MODELLO	DIMENSIONI	ANNO	RIF ORIGINALE	RIF CORAM	NOTE
BUFFEL					
3553	65x96,6x19/23	73-76	01260463	**C0241**	
3553	106x140x21/25	73-76	04334402	**C0245**	
MAMMUT I					
3423	65x96,6x19/23	-73	01260463	**C0241**	
3423	106x140x21/25	-73	04334402	**C0245**	
MAMMUT II					
3551	65x96,6x19/23	-73	01260463	**C0241**	
3551	106x140x21/25	-73	04334402	**C0245**	
WOTAN					
3066-3085 ,A	65x96,6x19/23		01260463	**C0241**	
3655-3656A	106x140x21/25		04334402	**C0245**	

FENDT

AGROBIL					
S	65x96,6x19/23		X 612.197.000	**C0241**	
S	106x140x21/25		X 600.197.100	**C0245**	
FARMER					
103 S	65x96,6x19/23		X 612.197.000	**C0241**	
103 S	106x140x21/25		X 600.197.100	**C0245**	
200 S,LS - 200 V	65x96,6x19/23		X 612.197.000	**C0241**	
200 S,LS - 200 V	106x140x21/25		X 600.197.100	**C0245**	
201 S	65x96,6x19/23		X 612.197.000	**C0241**	
201 S	106x140x21/25		X 600.197.100	**C0245**	
203 P,P-II	65x96,6x19/23		X 612.197.000	**C0241**	
203 P,P-II	106x140x21/25		X 600.197.100	**C0245**	
203 V-II	65x96,6x19/23		X 612.197.000	**C0241**	
203 V-II	106x140x21/25		X 600.197.100	**C0245**	
204 P-FL166	65x96,6x19/23		X 612.197.000	**C0241**	

REGGISPINTA DISTACCO FRIZIONE PER TRATTORI
CLUTCH RELEASE BEARING FOR AGRICULTURAL MACHINES
BUTEE D'EMBRAYAGE POUR MACHINES AGRICOLES

follows FENDT

MODELLO	DIMENSIONI	ANNO	RIF ORIGINALE	RIF CORAM	NOTE
FARMER					
204 P-FL166	106x140x21/25		X 600.197.100	**C0245**	
204 V-FL167	65x96,6x19/23		X 612.197.000	**C0241**	
204 V-FL167	106x140x21/25		X 600.197.100	**C0245**	
205 P	65x96,6x19/23		X 612.197.000	**C0241**	
205 P	106x140x21/25		X 600.197.100	**C0245**	
205 P-FL176	65x96,6x19/23		X 612.197.000	**C0241**	
205 P-FL176	106x140x21/25		X 600.197.100	**C0245**	
240 S	65x96,6x19/23		X 612.197.000	**C0241**	
240 S	106x140x21/25		X 600.197.100	**C0245**	
250 S,V	65x96,6x19/23		X 612.197.000	**C0241**	
250 S,V	106x140x21/25		X 600.197.100	**C0245**	
260 P - 260 S - 260 V	65x96,6x19/23		X 612.197.000	**C0241**	
260 P - 260 S - 260 V	106x140x21/25		X 600.197.100	**C0245**	
270 P - 270 P,V - 275 S,V	65x96,6x19/23		X 612.197.000	**C0241**	
270 P - 270 P,V - 275 S,V	106x140x21/25		X 600.197.100	**C0245**	
280 P - 280 S - 280 V	65x96,6x19/23		X 612.197.000	**C0241**	
280 P - 280 S - 280 V	106x140x21/25		X 600.197.100	**C0245**	
307 C - 308 C - 309 C	106x140x21/25		X 600.197.100	**C0245**	
FAVORIT					
3 S	65x96,6x19/23		X 612.197.000	**C0241**	
3 S	106x140x21/25		X 600.197.100	**C0245**	
GERATETRAGER					
250 GT - 255 GT	65x96,6x19/23		X 612.197.000	**C0241**	
250 GT - 255 GT	106x140x21/25		X 600.197.100	**C0245**	
275 GT - 275 GT(SA)	65x96,6x19/23		X 612.197.000	**C0241**	
275 GT - 275 GT(SA)	106x140x21/25		X 600.197.100	**C0245**	
345 GT	106x140x21/25		X 600.197.100	**C0245**	
360 GT - 365 GT	106x140x21/25		X 600.197.100	**C0245**	
370 GT	65x96,6x19/23		X 612.197.000	**C0241**	
370 GT	106x140x21/25		X 600.197.100	**C0245**	
380 GT - 380 GT TURBO	106x140x21/25		X 600.197.100	**C0245**	
390 GT - 395 GT	106x140x21/25		X 600.197.100	**C0245**	

REGGISPINTA DISTACCO FRIZIONE PER TRATTORI
CLUTCH RELEASE BEARING FOR AGRICULTURAL MACHINES
BUTEE D'EMBRAYAGE POUR MACHINES AGRICOLES

FIAT

MODELLO	DIMENSIONI	ANNO	RIF ORIGINALE	RIF CORAM	NOTE
18					
18 PICCOLA	36x68x18,9		5119290	**C0018**	
25					
25 R - 25 RS	36x68x18,9		5119290	**C0018**	
200					
200 - 211 R - 213 R - 215 R	36x68x18,9		5119290	**C0018**	
221 R - 230 - 231 R - 241 R	36x68x18,9		5119290	**C0018**	
251 D - 255 (CINGOLATO)	36x68x18,9		5119290	**C0018**	
211-215-250	36x68x18,9		5119290	**C0018**	
300-350					
300-312-315	36x68x18,9		5119290	**C0018**	
315 DTM	36x68x18,9		5119290	**C0018**	
315 N - 331 R - 342 RDT	36x68x18,9		5119290	**C0018**	
312 R-315-342 R-350 (DTNS) (NS) (S)	65x101,6x24		5103178	**C0121**	
350 - 350 DTN - 350 N - 350/8	50x82x23,5		5103175	**C0127**	
411-480					
411 R-415-420-420 DT-431 R-432 R-450 R	65x101,6x24		5103178	**C0121**	
450 - 450 DT - 450/6 DT - 450/9 DT	65x101,6x24		5103178	**C0121**	
440 - 440 DT - 440 V	50x82x23,5		5103175	**C0127**	
466-466 DT	50x90x22		5122028	**C0122**	
450-480	50x90x22		5122028	**C0122**	
480 - 480 DT	65x101,6x24		5103178	**C0121**	
450-480	50x82x29,1		599930	**C0123**	
480-8 - 480-8 DT - 480-8 V	50x82x23,5		5103175	**C0127**	LUK-O.M.G
500-580					
500-500 DT-500/12-500/B-500/BF-540	65x101,6x24		5103178	**C0121**	
500-540-550-570-580	50x90x22		5122028	**C0122**	
500-540-550-570-580	50x82x29,1		599930	**C0123**	
566-566 DT	50x90x22		5122028	**C0122**	
570-570 DT	50x82x23,5		5103175	**C0127**	LUK-O.M.G
580-580 DT	50x82x23,5		5103175	**C0127**	LUK-O.M.G
600-680					
600-640-650-670-680	50x90x22		5122028	**C0122**	
600-640-670-680	50x82x29,1		599930	**C0123**	
650-650DT	55x91,6x30,5		44011614	**C0124**	
666-666 DT	50x90x22		5122028	**C0122**	
670-670 DT	50x82x23,5		5103175	**C0127**	LUK-O.M.G
680-680 DT	50x82x23,5		5103175	**C0127**	LUK-O.M.G

REGGISPINTA DISTACCO FRIZIONE PER TRATTORI
CLUTCH RELEASE BEARING FOR AGRICULTURAL MACHINES
BUTEE D'EMBRAYAGE POUR MACHINES AGRICOLES

follows FIAT

MODELLO	DIMENSIONI	ANNO	RIF ORIGINALE	RIF CORAM	NOTE
750-780					
750-750DT	55x91,6x30,5		44011614	**C0124**	
750-780	50x90x22		5122028	**C0122**	
780	50x82x29,1		599930	**C0123**	
766-766 DT	50x90x22		5122028	**C0122**	
780-780 DT	50x82x23,5		5103175	**C0127**	
850-880					
850-850 DT	55x91,6x30,5		44011614	**C0124**	
880	50x90x22		5122028	**C0122**	
880 DT-5 - 880-5	50x82x23,5		5103175	**C0127**	LUK
980					
980	50x90x22		5122028	**C0122**	
980 DT	50x82x23,5		5103175	**C0127**	
1000					
1000-1000 DT	55x91,6x30,5		44011614	**C0124**	
1100					
1100/103	36x68x18,9		5119290	**C0018**	
1180-1880					
1180 - 1180 DT - 1280 - 1280 DT - 1380 - 1380 DT	55x91,6x30,5		44011614	**C0124**	
1580 - 1580 DT - 1880 - 1880 DT	55x91,6x30,5		44011614	**C0124**	
A 140					
140 - 140 DT	55x91,6x30,5		44011614	**C0124**	
SOMECA					
40-50-60-612-615-670-715-725-745	65x101,6x24		5103178	**C0121**	

REGGISPINTA DISTACCO FRIZIONE PER TRATTORI
CLUTCH RELEASE BEARING FOR AGRICULTURAL MACHINES
BUTEE D'EMBRAYAGE POUR MACHINES AGRICOLES

FIATAGRI

MODELLO	DIMENSIONI	ANNO	RIF ORIGINALE	RIF CORAM	NOTE
35-.. - 88-..					
45-66 DT	50x90x22		5122028	**C0122**	
50-66 DT - 50-86 DT	50x90x22		5122028	**C0122**	
55-46 DT - 55-66 DT - 55-76 DT - 55-90 DT	50x90x22		5122028	**C0122**	
60-66 DT - 60-76 DT - 60-90 DT - 60-94 DT	50x90x22		5122028	**C0122**	
62-86 DT	50x90x22		5122028	**C0122**	
65-66 DT - 65-90 DT - 65-90 DT - 65-93 DT - 65-94 DT	50x90x22		5122028	**C0122**	
70-66 DT - 70-76 DT - 70-88 DT - 70-90 DT	50x90x22		5122028	**C0122**	
72-86 DT - 72-93 DT - 72-94 DT	50x90x22		5122028	**C0122**	
80-66 DT - 80-76 DT - 80-88 DT - 80-90 DT	50x90x22		5122028	**C0122**	
82-86 DT - 82-93 DT - 82-94 DT	50x90x22		5122028	**C0122**	
85-90 DT	50x90x22		5122028	**C0122**	
88-93 DT - 88-94 DT	50x90x22		5122028	**C0122**	
366 - 480					
366	50x90x22		5122028	**C0122**	
420	50x90x22		5122028	**C0122**	
446	50x90x22		5122028	**C0122**	
450	50x90x22		5122028	**C0122**	
466	50x90x22		5122028	**C0122**	
480	50x90x22		5122028	**C0122**	
500 - 580					
500 DT	50x90x22		5122028	**C0122**	
540	50x90x22		5122028	**C0122**	
550	50x90x22		5122028	**C0122**	
566	50x90x22		5122028	**C0122**	
580	50x90x22		5122028	**C0122**	
600 - 780					
600	50x90x22		5122028	**C0122**	
640	50x90x22		5122028	**C0122**	
666	50x90x22		5122028	**C0122**	
670	50x90x22		5122028	**C0122**	
680 DT	50x90x22		5122028	**C0122**	
740 DT	50x90x22		5122028	**C0122**	
766 DT	50x90x22		5122028	**C0122**	
780 DT	50x90x22		5122028	**C0122**	
880 - 1180					
880/4 DT - 880/5 DT	50x90x22		5122028	**C0122**	
980 DT	50x90x22		5122028	**C0122**	
1180	65x96,6x19/23		5120853	**C0241**	
1180	106x140x21/25		44016827	**C0245**	

REGGISPINTA DISTACCO FRIZIONE PER TRATTORI
CLUTCH RELEASE BEARING FOR AGRICULTURAL MACHINES
BUTEE D'EMBRAYAGE POUR MACHINES AGRICOLES

follows FIATAGRI

MODELLO	DIMENSIONI	ANNO	RIF ORIGINALE	RIF CORAM	NOTE
90..-180..					
90-90 DT - 90-95 DT	50x90x22	01/84	5122028	**C0122**	
100-90 DT - 110-90 DT	50x90x22	01/81	5122028	**C0122**	
160-90 DT	65x96,6x19/23	01/84	5120853	**C0241**	
180-90 DT	65x96,6x19/23	01/84	5120853	**C0241**	
A 90 - A140					
A 90 - A 90 S - A 90 DT	50x90x22		5122028	**C0122**	
A100 - A100 S - A100 DT	50x90x22	01/84	5122028	**C0122**	
A110 - A110 S - A110 DT	50x90x22		5122028	**C0122**	

FORD

335-350					
335 - 340 -345	52,4x82,5x20,4		787580 A	**C0125**	
420-445					
420-445	52,4x82,5x20,4		787580 A	**C0125**	
515-555					
515-532-535-540-545-550-555	52,4x82,5x20,4		787580 A	**C0125**	
741-771					
741-771	52,4x82,5x20,4		787580 A	**C0125**	
941-981					
941-951-961-971-981	52,4x82,5x20,4		787580 A	**C0125**	

REGGISPINTA DISTACCO FRIZIONE PER TRATTORI
CLUTCH RELEASE BEARING FOR AGRICULTURAL MACHINES
BUTEE D'EMBRAYAGE POUR MACHINES AGRICOLES

follows FORD

MODELLO	DIMENSIONI	ANNO	RIF ORIGINALE	RIF CORAM	NOTE
21101-21105					
21101-21105	52,4x82,5x20,4		787580 A	**C0125**	
41101-41105					
41101-41102-41105	52,4x82,5x20,4		787580 A	**C0125**	
SERIES					
20300	52,4x82,5x20,4		787580 A	**C0125**	
21300	52,4x82,5x20,4		787580 A	**C0125**	
40300	52,4x82,5x20,4		787580 A	**C0125**	
40400	52,4x82,5x20,4		787580 A	**C0125**	
41300	52,4x82,5x20,4		787580 A	**C0125**	
41400	52,4x82,5x20,4		787580 A	**C0125**	
FORDSON					
MAJOR					
POWER MAJOR	52,4x82,5x20,4		787580 A	**C0125**	
SUPER MAJOR	52,4x82,5x20,4		787580 A	**C0125**	
GOLDONI					
324 - 336					
	36x68x18,9		6.30.0023	**C0018**	
5..					
518 - 518 T - 520 - 520 T - 521 - 521 T	36x68x18,9		6.30.0023	**C0018**	

REGGISPINTA DISTACCO FRIZIONE PER TRATTORI
CLUTCH RELEASE BEARING FOR AGRICULTURAL MACHINES
BUTEE D'EMBRAYAGE POUR MACHINES AGRICOLES

follows GOLDONI

MODELLO	DIMENSIONI	ANNO	RIF ORIGINALE	RIF CORAM	NOTE
7..					
716 - 718 - 719	36x68x18,9		6.30.0023	**C0018**	
8..					
828 - 834	36x68x18,9		6.30.0023	**C0018**	
9..					
919 - 921 - 926 - 928 - 930 - 932 - 933	36x68x18,9		6.30.0023	**C0018**	
1000					
	36x68x18,9		6.30.0023	**C0018**	
1038					
	36x68x18,9		6.30.0023	**C0018**	
1040					
	36x68x18,9		6.30.0023	**C0018**	
GM					
4	36x68x18,9		6.30.0023	**C0018**	
STANDARD					
	36x68x18,9		6.30.0023	**C0018**	
SUPER					
	36x68x18,9		6.30.0023	**C0018**	
TRANSCAR					
38 - 40	36x68x18,9		6.30.0023	**C0018**	
UNIVERSAL					
224 - 230 - 233 - 236 - 238 - 240	36x68x18,9		6.30.0023	**C0018**	

REGGISPINTA DISTACCO FRIZIONE PER TRATTORI
CLUTCH RELEASE BEARING FOR AGRICULTURAL MACHINES
BUTEE D'EMBRAYAGE POUR MACHINES AGRICOLES

HANOMAG

MODELLO	DIMENSIONI	ANNO	RIF ORIGINALE	RIF CORAM	NOTE
PERFECT					
300-400-400E	65x101,6x24		5103178	**C0121**	
GRANIT					
500 E-501 E	65x101,6x24		5103178	**C0121**	
BRILLIANT					
500-600-601-700-900	65x101,6x24		5103178	**C0121**	
R					
35/45-324 S-332-435/45-435 M-440-442/50	65x101,6x24		5103178	**C0121**	

INTERNATIONAL (IHC)

523-554					
523-553-554	65x101,6x24		5103178	**C0121**	
624-654					
624-644-654	65x101,6x24		5103178	**C0121**	
724-754					
724-743-744-745-754	65x101,6x24		5103178	**C0121**	
824-844					
824-844	65x101,6x24		5103178	**C0121**	
946-956					
946-955-956	65x101,6x24		5103178	**C0121**	
1046-1056					
1046-1055-1056	65x101,6x24		5103178	**C0121**	

REGGISPINTA DISTACCO FRIZIONE PER TRATTORI
CLUTCH RELEASE BEARING FOR AGRICULTURAL MACHINES
BUTEE D'EMBRAYAGE POUR MACHINES AGRICOLES

ITMA-EDILTER

MODELLO	DIMENSIONI	ANNO	RIF ORIGINALE	RIF CORAM	NOTE
A 301 - A 352 - A 453	52,4x82,5x20,4		12002	**C0125**	
A 503 - A 553 - A654	52,4x82,5x20,4		12002	**C0125**	

JOHN DEERE

SERIES

420	52,4x82,5x20,4		787580 A	**C0125**	
430	52,4x82,5x20,4		787580 A	**C0125**	

AL

AL 2116 T	52,4x82,5x20,4		787580 A	**C0125**	

T

T 310- T 510- T 610- T 710	65x101,6x24		5103178	**C0121**	

2940 - 3650

3200/X - 3300/X - 3400/X	65x96,6x19/23		X 612.197.000	**C0241**	
3200/X - 3300/X - 3400/X	106x140x21/25		X 600.197.100	**C0245**	

KRIEGER F.

KS-SERIE

KS 33 A	65x96,6x19/23		01260463	**C0241**	
KS 33 A	106x140x21/25		04334402	**C0245**	
KS 42 A	65x96,6x19/23		01260463	**C0241**	
KS 42 A	106x140x21/25		04334402	**C0245**	
KS 50 A - KS 55 A	65x96,6x19/23		01260463	**C0241**	
KS 50 A - KS 55 A	106x140x21/25		04334402	**C0245**	
KS 60 A - KS 65 A	65x96,6x19/23		01260463	**C0241**	
KS 60 A - KS 65 A	106x140x21/25		04334402	**C0245**	

REGGISPINTA DISTACCO FRIZIONE PER TRATTORI
CLUTCH RELEASE BEARING FOR AGRICULTURAL MACHINES
BUTEE D'EMBRAYAGE POUR MACHINES AGRICOLES

NIBBI BRUNO

MODELLO	DIMENSIONI	ANNO	RIF ORIGINALE	RIF CORAM	NOTE
2..					
225 L DT - 230 L DT	36x68x18,9		6.30.0023	**C0018**	
3..					
335 L DT - 340 L DT	36x68x18,9		6.30.0023	**C0018**	
G					
119 - 119 S - 219 - 219 S	36x68x18,9		6.30.0023	**C0018**	
419	36x68x18,9		6.30.0023	**C0018**	
520 - 521	36x68x18,9		6.30.0023	**C0018**	

MASSEY FERGUSON

MF-SERIE					
235 S	65x96,6x19/23		3001642X1	**C0241**	

MERCEDES-BENZ

416					
U 110,L,T	65x96,6x19/23		0009816727	**C0241**	
U 110,L,T	106x140x21/25		0009819727	**C0245**	
MB-TRAC					
1100	65x96,6x19/23		0009816727	**C0241**	
1100	106x140x21/25		0009819727	**C0245**	
1300	65x96,6x19/23		0009816727	**C0241**	
1300	106x140x21/25		0009819727	**C0245**	
1400 TURBO	65x96,6x19/23		0009816727	**C0241**	
1400 TURBO	106x140x21/25		0009819727	**C0245**	
1500	65x96,6x19/23		0009816727	**C0241**	
1500	106x140x21/25		0009819727	**C0245**	
1600 TURBO	65x96,6x19/23		0009816727	**C0241**	
1600 TURBO	106x140x21/25		0009819727	**C0245**	
1800 TURBO	65x96,6x19/23		0009816727	**C0241**	
1800 TURBO	106x140x21/25		0009819727	**C0245**	
700	65x96,6x19/23		0009816727	**C0241**	
800	65x96,6x19/23		0009816727	**C0241**	

REGGISPINTA DISTACCO FRIZIONE PER TRATTORI
CLUTCH RELEASE BEARING FOR AGRICULTURAL MACHINES
BUTEE D'EMBRAYAGE POUR MACHINES AGRICOLES

follows MERCEDES-BENZ

MODELLO	DIMENSIONI	ANNO	RIF ORIGINALE	RIF CORAM	NOTE
UNIMOG (406)					
U 84 (406)	65x96,6x19/23		0009816727	**C0241**	
U 84 (406)	106x140x21/25		0009819727	**C0245**	
UNIMOG (424)					
U 1000,T	65x96,6x19/23		0009816727	**C0241**	
U 1000,T	106x140x21/25		0009819727	**C0245**	
U 1200,T	65x96,6x19/23		0009816727	**C0241**	
U 1200,T	106x140x21/25		0009819727	**C0245**	
U 1250,L	65x96,6x19/23		0009816727	**C0241**	
U 1250,L	106x140x21/25		0009819727	**C0245**	
U 1550,L	65x96,6x19/23		0009816727	**C0241**	
U 1550,L	106x140x21/25		0009819727	**C0245**	
UNIMOG (425)					
U 120	65x96,6x19/23		0009816727	**C0241**	
U 120	106x140x21/25		0009819727	**C0245**	
U 125 (425)	65x96,6x19/23		0009816727	**C0241**	
U 125 (425)	106x140x21/25		0009819727	**C0245**	
U 1300,L	65x96,6x19/23		0009816727	**C0241**	
U 1300,L	106x140x21/25		0009819727	**C0245**	
U 150 (425)	65x96,6x19/23		0009816727	**C0241**	
U 150 (425)	106x140x21/25		0009819727	**C0245**	
U 1500,T	65x96,6x19/23		0009816727	**C0241**	
U 1500,T	106x140x21/25		0009819727	**C0245**	
UNIMOG (435)					
U 1000 (435)	65x96,6x19/23		0009816727	**C0241**	
U 1000 (435)	106x140x21/25		0009819727	**C0245**	
U 1300,L	65x96,6x19/23		0009816727	**C0241**	
U 1300,L	106x140x21/25		0009819727	**C0245**	
U 1700,L	65x96,6x19/23		0009816727	**C0241**	
U 1700,L	106x140x21/25		0009819727	**C0245**	
U 900	65x96,6x19/23		0009816727	**C0241**	
U 900	106x140x21/25		0009819727	**C0245**	

REGGISPINTA DISTACCO FRIZIONE PER TRATTORI
CLUTCH RELEASE BEARING FOR AGRICULTURAL MACHINES
BUTEE D'EMBRAYAGE POUR MACHINES AGRICOLES

PGS

MODELLO	DIMENSIONI	ANNO	RIF ORIGINALE	RIF CORAM	NOTE
2096					
	36x68x18,9		08210	**C0018**	
3078					
	36x68x18,9		08210	**C0018**	
ATTILA					
SUPER	36x68x18,9		08210	**C0018**	
D					
1200 S - 1500 S	36x68x18,9		08210	**C0018**	
F					
13 - 14 - 16	36x68x18,9		08210	**C0018**	
L					
15	36x68x18,9		08210	**C0018**	
R					
55	36x68x18,9		08210	**C0018**	
ROMA					
38 - 500	36x68x18,9		08210	**C0018**	
TP					
4500	36x68x18,9		08210	**C0018**	
TR					
5000	36x68x18,9		08210	**C0018**	

REGGISPINTA DISTACCO FRIZIONE PER TRATTORI
CLUTCH RELEASE BEARING FOR AGRICULTURAL MACHINES
BUTEE D'EMBRAYAGE POUR MACHINES AGRICOLES

RENAULT AGRIC.

MODELLO	DIMENSIONI	ANNO	RIF ORIGINALE	RIF CORAM	NOTE
58..-SERIE					
58-12 (R3111)	65x96,6x19/23		7700515751	**C0241**	
58-12 (R3111)	106x140x21/25		7700515750	**C0245**	
58-14 (R3112)	65x96,6x19/23		7700515751	**C0241**	
58-14 (R3112)	106x140x21/25		7700515750	**C0245**	
58-32 (R3112)	65x96,6x19/23		7700515751	**C0241**	
58-32 (R3112)	106x140x21/25		7700515750	**C0245**	
58-34 (R3112)	65x96,6x19/23		7700515751	**C0241**	
58-34 (R3112)	106x140x21/25		7700515750	**C0245**	
61..-SERIE					
61-12 (R7711)	65x96,6x19/23		7700515751	**C0241**	
61-12 (R7711)	106x140x21/25		7700515750	**C0245**	
61-14 (R7712)	65x96,6x19/23		7700515751	**C0241**	
61-14 (R7712)	106x140x21/25		7700515750	**C0245**	
65..-SERIE					
65-12 (R7711)	65x96,6x19/23		7700515751	**C0241**	
65-12 (R7711)	106x140x21/25		7700515750	**C0245**	
65-12 LS (R3121)	65x96,6x19/23		7700515751	**C0241**	
65-12 LS (R3121)	106x140x21/25		7700515750	**C0245**	
65-14 (R7712)	65x96,6x19/23		7700515751	**C0241**	
65-14 (R7712)	106x140x21/25		7700515750	**C0245**	
65-14 LS (R3122)	65x96,6x19/23		7700515751	**C0241**	
65-14 LS (R3122)	106x140x21/25		7700515750	**C0245**	
65-32 (R3121)	65x96,6x19/23		7700515751	**C0241**	
65-32 (R3121)	106x140x21/25		7700515750	**C0245**	
65-34 (R3122)	65x96,6x19/23		7700515751	**C0241**	
65-34 (R3122)	106x140x21/25		7700515750	**C0245**	
68..-SERIE					
68-12 (R7721)	65x96,6x19/23		7700515751	**C0241**	
68-12 (R7721)	106x140x21/25		7700515750	**C0245**	
68-14 (R7722)	65x96,6x19/23		7700515751	**C0241**	
68-14 (R7722)	106x140x21/25		7700515750	**C0245**	
68-12 (R3131)	65x96,6x19/23		7700515751	**C0241**	
68-12 (R3131)	106x140x21/25		7700515750	**C0245**	
70-14 (R3132)	65x96,6x19/23		7700515751	**C0241**	
70-14 (R3132)	106x140x21/25		7700515750	**C0245**	
70-32 PA (R3131)	65x96,6x19/23		7700515751	**C0241**	
70-32 PA (R3131)	106x140x21/25		7700515750	**C0245**	
70-34 PA (R3132)	65x96,6x19/23		7700515751	**C0241**	
70-34 PA (R3132)	106x140x21/25		7700515750	**C0245**	

REGGISPINTA DISTACCO FRIZIONE PER TRATTORI
CLUTCH RELEASE BEARING FOR AGRICULTURAL MACHINES
BUTEE D'EMBRAYAGE POUR MACHINES AGRICOLES

follows RENAULT AGRIC.

MODELLO	DIMENSIONI	ANNO	RIF ORIGINALE	RIF CORAM	NOTE
75..-SERIE					
75-12 (R3441,7731)	65x96,6x19/23		7700515751	**C0241**	
75-12 (R3441,7731)	106x140x21/25		7700515750	**C0245**	
75-12 (R7731)	65x96,6x19/23		7700515751	**C0241**	
75-12 (R7731)	106x140x21/25		7700515750	**C0245**	
75-12 LS (R3141)	65x96,6x19/23		7700515751	**C0241**	
75-12 LS (R3141)	106x140x21/25		7700515750	**C0245**	
75-14 (R3142,7732)	65x96,6x19/23		7700515751	**C0241**	
75-14 (R3142,7732)	106x140x21/25		7700515750	**C0245**	
75-14 (R7732)	65x96,6x19/23		7700515751	**C0241**	
75-14 (R7732)	106x140x21/25		7700515750	**C0245**	
75-14 LS (R3142)	65x96,6x19/23		7700515751	**C0241**	
75-14 LS (R3142)	106x140x21/25		7700515750	**C0245**	
75-32 (R3141)	65x96,6x19/23		7700515751	**C0241**	
75-32 (R3141)	106x140x21/25		7700515750	**C0245**	
75-32 (R7721)	65x96,6x19/23		7700515751	**C0241**	
75-32 (R7721)	106x140x21/25		7700515750	**C0245**	
75-34 (R3142)	65x96,6x19/23		7700515751	**C0241**	
75-34 (R3142)	106x140x21/25		7700515750	**C0245**	
75-34 (R7722)	65x96,6x19/23		7700515751	**C0241**	
75-34 (R7722)	106x140x21/25		7700515750	**C0245**	
77..-SERIE					
77-12 (R7721)	65x96,6x19/23		7700515751	**C0241**	
77-12 (R7721)	106x140x21/25		7700515750	**C0245**	
77-14 (R7722)	65x96,6x19/23		7700515751	**C0241**	
77-14 (R7722)	106x140x21/25		7700515750	**C0245**	
80..-SERIE					
80-12 (R3151)	65x96,6x19/23		7700515751	**C0241**	
80-12 (R3151)	106x140x21/25		7700515750	**C0245**	
80-12 (R3152,7731)	65x96,6x19/23		7700515751	**C0241**	
80-12 (R3152,7731)	106x140x21/25		7700515750	**C0245**	
80-12 (R7731)	65x96,6x19/23		7700515751	**C0241**	
80-12 (R7731)	106x140x21/25		7700515750	**C0245**	
80-12 (R7761)	65x96,6x19/23		7700515751	**C0241**	
80-12 (R7761)	106x140x21/25		7700515750	**C0245**	
80-14 (R3152)	65x96,6x19/23		7700515751	**C0241**	
80-14 (R3152)	106x140x21/25		7700515750	**C0245**	
80-14 (R3152,7732)	65x96,6x19/23		7700515751	**C0241**	
80-14 (R3152,7732)	106x140x21/25		7700515750	**C0245**	
80-14 (R7732)	65x96,6x19/23		7700515751	**C0241**	
80-14 (R7732)	106x140x21/25		7700515750	**C0245**	
80-14 (R7762)	65x96,6x19/23		7700515751	**C0241**	
80-14 (R7762)	106x140x21/25		7700515750	**C0245**	
80-32 (R3151)	65x96,6x19/23		7700515751	**C0241**	
80-32 (R3151)	106x140x21/25		7700515750	**C0245**	
80-32 (R3152)	65x96,6x19/23		7700515751	**C0241**	
80-32 (R3152)	106x140x21/25		7700515750	**C0245**	

REGGISPINTA DISTACCO FRIZIONE PER TRATTORI
CLUTCH RELEASE BEARING FOR AGRICULTURAL MACHINES
BUTEE D'EMBRAYAGE POUR MACHINES AGRICOLES

follows RENAULT AGRIC.

MODELLO	DIMENSIONI	ANNO	RIF ORIGINALE	RIF CORAM	NOTE
85..-SERIE					
85-12 (R3161)	65x96,6x19/23		7700515751	**C0241**	
85-12 (R3161)	106x140x21/25		7700515750	**C0245**	
85-12 (R7761)	65x96,6x19/23		7700515751	**C0241**	
85-12 (R7761)	106x140x21/25		7700515750	**C0245**	
85-14 (R3162)	65x96,6x19/23		7700515751	**C0241**	
85-14 (R3162)	106x140x21/25		7700515750	**C0245**	
85-14 (R3171,3172)	65x96,6x19/23		7700515751	**C0241**	
85-14 (R3171,3172)	106x140x21/25		7700515750	**C0245**	
85-14 (R7762)	65x96,6x19/23		7700515751	**C0241**	
85-14 (R7762)	106x140x21/25		7700515750	**C0245**	
85-32 (R3161)	65x96,6x19/23		7700515751	**C0241**	
85-32 (R3161)	106x140x21/25		7700515750	**C0245**	
85-32 (R7761)	65x96,6x19/23		7700515751	**C0241**	
85-32 (R7761)	106x140x21/25		7700515750	**C0245**	
85-34 (R3162)	65x96,6x19/23		7700515751	**C0241**	
85-34 (R3162)	106x140x21/25		7700515750	**C0245**	
85-34 (R7762)	65x96,6x19/23		7700515751	**C0241**	
85-34 (R7762)	106x140x21/25		7700515750	**C0245**	
85-34 (R9034)	65x96,6x19/23		7700515751	**C0241**	
85-34 (R9034)	106x140x21/25		7700515750	**C0245**	
90..-SERIE					
90-32 (R3171)	65x96,6x19/23		7700515751	**C0241**	
90-32 (R3171)	106x140x21/25		7700515750	**C0245**	
90-32 (R7771)	65x96,6x19/23		7700515751	**C0241**	
90-32 (R7771)	106x140x21/25		7700515750	**C0245**	
90-32 MA,ME,MS,MX, (R3171)	65x96,6x19/23		7700515751	**C0241**	
90-32 MA,ME,MS,MX, (R3171)	106x140x21/25		7700515750	**C0245**	
90-34 (R3172)	65x96,6x19/23		7700515751	**C0241**	
90-34 (R3172)	106x140x21/25		7700515750	**C0245**	
90-34 (R7771)	65x96,6x19/23		7700515751	**C0241**	
90-34 (R7771)	106x140x21/25		7700515750	**C0245**	
90-34 (R7772)	65x96,6x19/23		7700515751	**C0241**	
90-34 (R7772)	106x140x21/25		7700515750	**C0245**	
90-34 MA,ME,MS,MX (R3172)	65x96,6x19/23		7700515751	**C0241**	
90-34 MA,ME,MS,MX (R3172)	106x140x21/25		7700515750	**C0245**	
92..-SERIE					
92 (R7601)	65x96,6x19/23		7700515751	**C0241**	
92 (R7601)	106x140x21/25		7700515750	**C0245**	
92 Industrie (R7614)	65x96,6x19/23		7700515751	**C0241**	
92 Industrie (R7614)	106x140x21/25		7700515750	**C0245**	
94..-SERIE					
94 (R7611)	65x96,6x19/23		7700515751	**C0241**	
94 (R7611)	106x140x21/25		7700515750	**C0245**	

REGGISPINTA DISTACCO FRIZIONE PER TRATTORI
CLUTCH RELEASE BEARING FOR AGRICULTURAL MACHINES
BUTEE D'EMBRAYAGE POUR MACHINES AGRICOLES

follows RENAULT AGRIC.

MODELLO	DIMENSIONI	ANNO	RIF ORIGINALE	RIF CORAM	NOTE
95..-SERIE					
95-12 (R7811)	65x96,6x19/23		7700515751	**C0241**	
95-12 (R7811)	106x140x21/25		7700515750	**C0245**	
95-12 TX (R7811)	65x96,6x19/23		7700515751	**C0241**	
95-12 TX (R7811)	106x140x21/25		7700515750	**C0245**	
95-14 (R7812)	65x96,6x19/23		7700515751	**C0241**	
95-14 (R7812)	106x140x21/25		7700515750	**C0245**	
95-14 TX (R7812)	65x96,6x19/23		7700515751	**C0241**	
95-14 TX (R7812)	106x140x21/25		7700515750	**C0245**	
96..-SERIE					
96 (R7631)	65x96,6x19/23		7700515751	**C0241**	
96 (R7631)	106x140x21/25		7700515750	**C0245**	
98..-SERIE					
98 (R7456)	65x96,6x19/23		7700515751	**C0241**	
98 (R7456)	106x140x21/25		7700515750	**C0245**	
98 (R7651)	65x96,6x19/23		7700515751	**C0241**	
98 (R7651)	106x140x21/25		7700515750	**C0245**	
103..-SERIE					
103-12 (R7821)	65x96,6x19/23		7700515751	**C0241**	
103-12 (R7821)	106x140x21/25		7700515750	**C0245**	
103-12 TX (R7821)	65x96,6x19/23		7700515751	**C0241**	
103-12 TX (R7821)	106x140x21/25		7700515750	**C0245**	
103-14 (R7822)	65x96,6x19/23		7700515751	**C0241**	
103-14 (R7822)	106x140x21/25		7700515750	**C0245**	
103-14 TX (R7822)	65x96,6x19/23		7700515751	**C0241**	
103-14 TX (R7822)	106x140x21/25		7700515750	**C0245**	
103-52 (R7821)	65x96,6x19/23		7700515751	**C0241**	
103-52 (R7821)	106x140x21/25		7700515750	**C0245**	
103-54 (R7822)	65x96,6x19/23		7700515751	**C0241**	
103-54 (R7822)	106x140x21/25		7700515750	**C0245**	
106..-SERIE					
106-14 (R7832)	65x96,6x19/23		7700515751	**C0241**	
106-14 (R7832)	106x140x21/25		7700515750	**C0245**	
106-54 (R7842)	65x96,6x19/23		7700515751	**C0241**	
106-54 (R7842)	106x140x21/25		7700515750	**C0245**	
110..-SERIE					
110-14 (R7912)	65x96,6x19/23		7700515751	**C0241**	
110-14 (R7912)	106x140x21/25		7700515750	**C0245**	
110-14 RE,TS,TX, (R7912)	65x96,6x19/23		7700515751	**C0241**	
110-14 RE,TS,TX, (R7912)	106x140x21/25		7700515750	**C0245**	
110-54 (R7912)	65x96,6x19/23		7700515751	**C0241**	
110-54 (R7912)	106x140x21/25		7700515750	**C0245**	

REGGISPINTA DISTACCO FRIZIONE PER TRATTORI
CLUTCH RELEASE BEARING FOR AGRICULTURAL MACHINES
BUTEE D'EMBRAYAGE POUR MACHINES AGRICOLES

follows RENAULT AGRIC.

MODELLO	DIMENSIONI	ANNO	RIF ORIGINALE	RIF CORAM	NOTE
113..-SERIE					
113-12 (R7921)	65x96,6x19/23		7700515751	**C0241**	
113-12 (R7921)	106x140x21/25		7700515750	**C0245**	
113-12 RE,TS,TX (R7921)	65x96,6x19/23		7700515751	**C0241**	
113-12 RE,TS,TX (R7921)	106x140x21/25		7700515750	**C0245**	
113-14 (R7922)	65x96,6x19/23		7700515751	**C0241**	
113-14 (R7922)	106x140x21/25		7700515750	**C0245**	
113-14 RE,TS,TX (R7922)	65x96,6x19/23		7700515751	**C0241**	
113-14 RE,TS,TX (R7922)	106x140x21/25		7700515750	**C0245**	
120..-SERIE					
120-14 (R7922)	65x96,6x19/23		7700515751	**C0241**	
120-14 (R7922)	106x140x21/25		7700515750	**C0245**	
120-14 RE,TS,TX (R7922)	65x96,6x19/23		7700515751	**C0241**	
120-14 RE,TS,TX (R7922)	106x140x21/25		7700515750	**C0245**	
120-54 (R7922)	65x96,6x19/23		7700515751	**C0241**	
120-54 (R7922)	106x140x21/25		7700515750	**C0245**	
133..-SERIE					
133-14 (R7932)	65x96,6x19/23		7700515751	**C0241**	
133-14 (R7932)	106x140x21/25		7700515750	**C0245**	
133-14 RE,TS,TX (R7932)	65x96,6x19/23		7700515751	**C0241**	
133-14 RE,TS,TX (R7932)	106x140x21/25		7700515750	**C0245**	
133-54 (R7932)	65x96,6x19/23		7700515751	**C0241**	
133-54 (R7932)	106x140x21/25		7700515750	**C0245**	
3..-5..-SERIE					
461 (R7441)	65x96,6x19/23		7700515751	**C0241**	
461 (R7441)	106x140x21/25		7700515750	**C0245**	
462 (R7442)	65x96,6x19/23		7700515751	**C0241**	
462 (R7442)	106x140x21/25		7700515750	**C0245**	
496 (R7635)	65x96,6x19/23		7700515751	**C0241**	
496 (R7635)	106x140x21/25		7700515750	**C0245**	
498 (R7466)	65x96,6x19/23		7700515751	**C0241**	
498 (R7466)	106x140x21/25		7700515750	**C0245**	
498 (R7655)	65x96,6x19/23		7700515751	**C0241**	
498 (R7655)	106x140x21/25		7700515750	**C0245**	
551 (R7451)	65x96,6x19/23		7700515751	**C0241**	
551 (R7451)	106x140x21/25		7700515750	**C0245**	
551-4 (R7454)	65x96,6x19/23		7700515751	**C0241**	
551-4 (R7454)	106x140x21/25		7700515750	**C0245**	
556 (R7456)	65x96,6x19/23		7700515751	**C0241**	
556 (R7456)	106x140x21/25		7700515750	**C0245**	
581	65x96,6x19/23		7700515751	**C0241**	
581	106x140x21/25		7700515750	**C0245**	

REGGISPINTA DISTACCO FRIZIONE PER TRATTORI
CLUTCH RELEASE BEARING FOR AGRICULTURAL MACHINES
BUTEE D'EMBRAYAGE POUR MACHINES AGRICOLES

follows RENAULT AGRIC.

MODELLO	DIMENSIONI	ANNO	RIF ORIGINALE	RIF CORAM	NOTE
6..-8..-SERIE					
601 (R7491)	65x96,6x19/23		7700515751	**C0241**	
601 (R7491)	106x140x21/25		7700515750	**C0245**	
601-4 (R7494)	65x96,6x19/23		7700515751	**C0241**	
601-4 (R7494)	106x140x21/25		7700515750	**C0245**	
651 (R7461)	65x96,6x19/23		7700515751	**C0241**	
651 (R7461)	106x140x21/25		7700515750	**C0245**	
651-4 (R7464)	65x96,6x19/23		7700515751	**C0241**	
651-4 (R7464)	106x140x21/25		7700515750	**C0245**	
652 (R7462)	65x96,6x19/23		7700515751	**C0241**	
652 (R7462)	106x140x21/25		7700515750	**C0245**	
656 (R7466)	65x96,6x19/23		7700515751	**C0241**	
656 (R7466)	106x140x21/25		7700515750	**C0245**	
681 (R7491)	65x96,6x19/23		7700515751	**C0241**	
681 (R7491)	106x140x21/25		7700515750	**C0245**	
681-4 (R7494)	65x96,6x19/23		7700515751	**C0241**	
681-4 (R7494)	106x140x21/25		7700515750	**C0245**	
751 (R7621)	65x96,6x19/23		7700515751	**C0241**	
751 (R7621)	106x140x21/25		7700515750	**C0245**	
751-4 (R7624)	65x96,6x19/23		7700515751	**C0241**	
751-4 (R7624)	106x140x21/25		7700515750	**C0245**	
751-S4 (R7504)	65x96,6x19/23		7700515751	**C0241**	
751-S4 (R7504)	106x140x21/25		7700515750	**C0245**	
751 S (R7501)	65x96,6x19/23		7700515751	**C0241**	
751 S (R7501)	106x140x21/25		7700515750	**C0245**	
752 (R7622)	65x96,6x19/23		7700515751	**C0241**	
752 (R7622)	106x140x21/25		7700515750	**C0245**	
752-4 (R7624)	65x96,6x19/23		7700515751	**C0241**	
752-4 (R7624)	106x140x21/25		7700515750	**C0245**	
781 (R7591)	65x96,6x19/23		7700515751	**C0241**	
781 (R7591)	106x140x21/25		7700515750	**C0245**	
781-4 (R7594)	65x96,6x19/23		7700515751	**C0241**	
781-4 (R7594)	106x140x21/25		7700515750	**C0245**	
782 (R7622)	65x96,6x19/23		7700515751	**C0241**	
782 (R7622)	106x140x21/25		7700515750	**C0245**	
782-4 (R7624)	65x96,6x19/23		7700515751	**C0241**	
782-4 (R7624)	106x140x21/25		7700515750	**C0245**	
851 (R7661)	65x96,6x19/23		7700515751	**C0241**	
851 (R7661)	106x140x21/25		7700515750	**C0245**	
851-4 (R7664)	65x96,6x19/23		7700515751	**C0241**	
851-4 (R7664)	106x140x21/25		7700515750	**C0245**	
891 (R7681)	65x96,6x19/23		7700515751	**C0241**	
891 (R7681)	106x140x21/25		7700515750	**C0245**	
891-4 (R7684)	65x96,6x19/23		7700515751	**C0241**	
891-4 (R7684)	106x140x21/25		7700515750	**C0245**	

REGGISPINTA DISTACCO FRIZIONE PER TRATTORI
CLUTCH RELEASE BEARING FOR AGRICULTURAL MACHINES
BUTEE D'EMBRAYAGE POUR MACHINES AGRICOLES

follows RENAULT AGRIC.

MODELLO	DIMENSIONI	ANNO	RIF ORIGINALE	RIF CORAM	NOTE
9..-11..-SERIE					
1151-4 (R7674)	65x96,6x19/23		7700515751	**C0241**	
1151-4 (R7674)	106x140x21/25		7700515750	**C0245**	
1181-4 (R7674)	65x96,6x19/23		7700515751	**C0241**	
1181-4 (R7674)	106x140x21/25		7700515750	**C0245**	
921 (R7641)	65x96,6x19/23		7700515751	**C0241**	
921 (R7641)	106x140x21/25		7700515750	**C0245**	
921-4 (R7644)	65x96,6x19/23		7700515751	**C0241**	
921-4 (R7644)	106x140x21/25		7700515750	**C0245**	
951 (R7641)	65x96,6x19/23		7700515751	**C0241**	
951 (R7641)	106x140x21/25		7700515750	**C0245**	
951-4 (R7644)	65x96,6x19/23		7700515751	**C0241**	
951-4 (R7644)	106x140x21/25		7700515750	**C0245**	
981 (R7641)	65x96,6x19/23		7700515751	**C0241**	
981 (R7641)	106x140x21/25		7700515750	**C0245**	
981 (R7681)	65x96,6x19/23		7700515751	**C0241**	
981 (R7681)	106x140x21/25		7700515750	**C0245**	
981-4 (R7644)	65x96,6x19/23		7700515751	**C0241**	
981-4 (R7644)	106x140x21/25		7700515750	**C0245**	
CERES					
65	65x96,6x19/23		7700515751	**C0241**	
65	106x140x21/25		7700515750	**C0245**	
70 (R3321,3322)	65x96,6x19/23		7700515751	**C0241**	
70 (R3321,3322)	106x140x21/25		7700515750	**C0245**	
75	65x96,6x19/23		7700515751	**C0241**	
75	106x140x21/25		7700515750	**C0245**	
85	65x96,6x19/23	-02/95	7700515751	**C0241**	
85	106x140x21/25	-02/95	7700515750	**C0245**	
85/X (R3441,3442)	65x96,6x19/23	03/95	7700515751	**C0241**	
85/X (R3441,3442)	106x140x21/25	03/95	7700515750	**C0245**	
95	65x96,6x19/23		7700515751	**C0241**	
95	106x140x21/25		7700515750	**C0245**	
CERGOS					
330 (M3512)	65x96,6x19/23		7700515751	**C0241**	
330 (M3512)	106x140x21/25		7700515750	**C0245**	

REGGISPINTA DISTACCO FRIZIONE PER TRATTORI
CLUTCH RELEASE BEARING FOR AGRICULTURAL MACHINES
BUTEE D'EMBRAYAGE POUR MACHINES AGRICOLES

SCHLUTER

MODELLO	DIMENSIONI	ANNO	RIF ORIGINALE	RIF CORAM	NOTE
SUPER					
1250 V	106x140x21/25		04334402	**C0245**	
1250 VL	106x140x21/25		04334402	**C0245**	
1500 TV - 1500 TVL	106x140x21/25		04334402	**C0245**	
2000 TVL	65x96,6x19/23		01260463	**C0241**	
2000 TVL	106x140x21/25		04334402	**C0245**	

STEYR

MODELLO	DIMENSIONI	ANNO	RIF ORIGINALE	RIF CORAM	NOTE
80..					
8055	65x96,6x19/23		01260463	**C0241**	
8055	106x140x21/25		04334402	**C0245**	
8080 ,a	65x96,6x19/23		01260463	**C0241**	
8080 ,a	106x140x21/25		04334402	**C0245**	
8085	65x96,6x19/23		01260463	**C0241**	
8085	106x140x21/25		04334402	**C0245**	
8090 ,a	65x96,6x19/23		01260463	**C0241**	
8090 ,a	106x140x21/25		04334402	**C0245**	
8095 ap	65x96,6x19/23		01260463	**C0241**	
8095 ap	106x140x21/25		04334402	**C0245**	
9..-18..					
942/a WD308.48	65x96,6x19/23		01260463	**C0241**	
942/a WD308.48	106x140x21/25		04334402	**C0245**	
948/a Turbo WD308.85	65x96,6x19/23		01260463	**C0241**	
948/a Turbo WD308.85	106x140x21/25		04334402	**C0245**	
955/a WD301.42/43 MWM DT226/3	65x96,6x19/23	-01/98	01260463	**C0241**	
955/a WD301.42/43 MWM DT226/3	106x140x21/25	-01/98	04334402	**C0245**	
90..					
9078 a	65x96,6x19/23		01260463	**C0241**	
9078 a	106x140x21/25		04334402	**C0245**	
9086 a	65x96,6x19/23		01260463	**C0241**	
9086 a	106x140x21/25		04334402	**C0245**	
9094 a	65x96,6x19/23		01260463	**C0241**	
9094 a	106x140x21/25		04334402	**C0245**	

REGGISPINTA DISTACCO FRIZIONE PER TRATTORI
CLUTCH RELEASE BEARING FOR AGRICULTURAL MACHINES
BUTEE D'EMBRAYAGE POUR MACHINES AGRICOLES

VALPADANA

MODELLO	DIMENSIONI	ANNO	RIF ORIGINALE	RIF CORAM	NOTE
4					
RM 20 - RM 350 - RM 450	36x68x18,9		08210	**C0018**	
PADANO					
D 12	36x68x18,9		08210	**C0018**	
SUPERPADANO					
D 14	36x68x18,9		08210	**C0018**	
VMC					
18	36x68x18,9		08210	**C0018**	

REGGISPINTA DISTACCO FRIZIONE PER TRATTORI
CLUTCH RELEASE BEARING FOR AGRICULTURAL MACHINES
BUTEE D'EMBRAYAGE POUR MACHINES AGRICOLES
LISTA DI COMPARAZIONE - CROSS REFERENCES - LISTE CORRISPONDANCE

CORAM	APPLICAZIONE	ORIGINALE	SACHS	VALEO IT	VALEO FR	SKF	LORETT	SNT	LUK
C0018	AGRIFULL	10040939		R035		609535	CR1138		
C0018	BERTOLINI	81.2794.00		R035		609535	CR1138		
C0018	FIAT	5119290		R035		609535	CR1138		
C0018	FIAT	816341		R035		609535	CR1138		
C0018	GOLDONI	6.30.0023		R035		609535	CR1138		
C0018	PGS	08210		R035		609535	CR1138		
C0018	VALPADANA	102772		R035		609535	CR1138		
C0018	VALPADANA	104953		R035		609535	CR1138		
C0121	FIAT	5103178				615923A	CR1412		
C0121	INTERNATIONAL (IHC)	5103178				615923A	CR1412		
C0121	HANOMAG	5103178				615923A	CR1412		
C0121	JOHN DEERE	5103178				615923A	CR1412		
C0122	FIAT	5122028	1863 838 001			630803	CR1417	190087	500045900
C0123	FIAT	599930				615533	CR1415	190147	500058610
C0124	FIAT	44011614		R071			CR1416	190023	500058710
C0125	AGRIFULL	715590040				NIC. N 1167	CR1420 A		
C0125	ALLIS	A35891				NIC. N 1167	CR1420 A		
C0125	FORD	787580 A				NIC. N 1167	CR1420 A		
C0125	FORD	CONN7580 A				NIC. N 1167	CR1420 A		
C0125	ITMA - EDILTER	12002				NIC. N 1167	CR1420 A		
C0125	JOHN DEERE	AM3983 T				NIC. N 1167	CR1420 A		
C0125	MASS. FERGUSON	831788 M1				NIC. N 1167	CR1420 A		
C0127	FIAT	5103175				615465 C	CR1411	190037	
C0127	FIAT	5119164				615465 A	CR1411	190037	
C0127	FIAT	5119875				615465 C	CR1411	190037	
C0127	FIAT	4954935				615465C	CR1411	190037	
C0241	DEUTZ	4370143	1863 837 002			307418 C-AA	CR1435		500005910
C0241	DEUTZ	04362644	1863 837 002			307418 C-AA	CR1435		500005910
C0241	DEUTZ	02388802	1863 837 002			307418 C-AA	CR1435		500005910
C0241	DEUTZ	01260463	1863 837 002			307418 C-AA	CR1435		500005910
C0241	FENDT	X612.197.000	1863 837 002			307418 C-AA	CR1435		500005910
C0241	FIAT	5120853	1863 837 002			307418 C-AA	CR1435		500005910
C0241	IVECO	01260463	1863 837 002			307418 C-AA	CR1435		500005910
C0241	MASS. FERGUSON	3001642X1	1863 837 002			307418 C-AA	CR1435		500005910
C0241	MERCEDES-BENZ	0009816727	1863 837 002			307418 C-AA	CR1435		500005910
C0241	MERCEDES-BENZ	0009817025	1863 837 002			307418 C-AA	CR1435		500005910
C0241	MERCEDES-BENZ	0009816627	1863 837 002			307418 C-AA	CR1435		500005910
C0241	RENAULT	7700515751	1863 837 002			307418 C-AA	CR1435		500005910
C0241	RENAULT	7700653344	1863 837 002			307418 C-AA	CR1435		500005910
C0245	DEUTZ	04334402	1863 855 000			307438 A	CR1410		500005810
C0245	DEUTZ	4370142	1863 855 000			307438 AC	CR1410		500005810
C0245	FIAT	44016827	1863 855 000			307438 C	CR1410		500005810
C0245	FENDT	X600.197.100	1863 855 000			307438 AC	CR1410		500005810
C0245	FENDT	X612.197.100	1863 855 000			307438 A	CR1410		500005810
C0245	MERCEDES-BENZ	0009819727	1863 855 000			307438 C	CR1410		500005810
C0245	RENAULT	7700515750	1863 855 000			307438 A	CR1410		500005810
C0245	RENAULT	7700653343	1863 855 000			307438 AC	CR1410		500005810
C0252	EICHER	706629	1863 123 000						

REGGISPINTA DISTACCO FRIZIONE PER TRATTORI
CLUTCH RELEASE BEARING FOR AGRICULTURAL MACHINES
BUTEE D'EMBRAYAGE POUR MACHINES AGRICOLES
LISTA DI COMPARAZIONE - CROSS REFERENCES - LISTE CORRISPONDANCE

AGRIFULL	CORAM
10040939	C0018
715590040	C0125

ALLIS	CORAM
A35891	C0125

BERTOLINI	CORAM
81.2794.00	C0018

DEUTZ	CORAM
01260463	C0241
02388802	C0241
04334402	C0245
04362644	C0241
4370142	C0245
4370143	C0241

EICHER	CORAM
706629	C0252

FENDT	CORAM
X600.197.100	C0245
X612.197.000	C0241
X612.197.100	C0245

FIAT	CORAM
599930	C0123
816341	C0018
4954935	C0127
5103175	C0127
5103178	C0121
5119164	C0127
5119290	C0018
5119875	C0127
5120853	C0241
5122028	C0122
44011614	C0124
44016827	C0245

FORD	CORAM
787580 A	C0125
CONN7580 A	C0125

GOLDONI	CORAM
6.30.0023	C0018

HANOMAG	CORAM
5103178	C0121

INTERNATIONAL (IHC)	CORAM
5103178	C0121

ITMA - EDILTER	CORAM
12002	C0125

IVECO	CORAM
01260463	C0241

JOHN DEERE	CORAM
5103178	C0121
AM3983 T	C0125

MASS. FERGUSON	CORAM
3001642X1	C0241
831788 M1	C0125

MERCEDES-BENZ	CORAM
0009816627	C0241
0009816727	C0241
0009817025	C0241
0009819727	C0245

PGS	CORAM
08210	C0018

RENAULT	CORAM
7700515750	C0245
7700515751	C0241
7700653343	C0245
7700653344	C0241

VALPADANA	CORAM
102772	C0018
104953	C0018

LORETT	CORAM
CR1138	C0018
CR1410	C0245
CR1412	C0121
CR1415	C0123
CR1416	C0124
CR1417	C0122
CR1420 A	C0125
CR1435	C0241

LUK	CORAM
500005810	C0245
500005910	C0241
500045900	C0122
500058610	C0123
500058710	C0124

SACHS	CORAM
1863 123 000	C0252
1863 837 002	C0241
1863 838 001	C0122
1863 855 000	C0245

SKF	CORAM
609535	C0018
307418 C-AA	C0241
3307438 A	C0245
307438 AC	C0245
307438 C	C0245
307438 C	C0245
609535	C0018
615465 A	C0127
615465C	C0127
615533	C0123
615923A	C0121
630803	C0122
NIC. N 1167	C0125

SNT	CORAM
190023	C0124
190037	C0127
190087	C0122
190147	C0123

VALEO ITALIA	CORAM
R035	C0018
R071	C0124

C0018

AGRIFULL	10040939	PGS	08210
BERTOLINI	81.2794.00	VALPADANA	102772
FIAT	5119290	VALPADANA	104953
FIAT	816341		
GOLDONI	6.30.0023		

C0121

FIAT	5103178		
INTERNATIONAL (IHC)	5103178		
HANOMAG	5103178		
JOHN DEERE	5103178		

C0122

FIAT	5122028		

C0123

FIAT	599930		

C0124

FIAT	44011614		

C0125

AGRIFULL	715590040	JOHN DEERE	AM3983 T
ALLIS	A35891	MASS. FERGUSON	831788 M1
FORD	787580 A		
FORD	CONN7580 A		
ITMA - EDILTER	12002		

C0127

FIAT	5103175		
FIAT	5119164		
FIAT	5119875		
FIAT	4954935		

C0241

DEUTZ	4370143	MASS. FERGUSON	3001642X1
DEUTZ	04362644	MERCEDES	0009816727
FENDT	X612.197.000	MERCEDES	0009817025
FIAT	5120853	RENAULT	7700515751
IVECO	01260463	RENAULT	7700653344

C0245

DEUTZ	04334402	MERCEDES	0009819727
DEUTZ	4370142	RENAULT	7700515750
FIAT	44016827	RENAULT	7700653343
FENDT	X600.197.100		
FENDT	X612.197.100		

C0252

EICHER	706629		

TENDICINGHIA DISTRIBUZIONE
BELT TIGHTENERS
TENDEURS DE COURROIE

ALFA ROMEO

MODELLO	DIMENSIONI	ANNO	RIF ORIGINALE	RIF CORAM	NOTE
ALFA 33					
Eccetto 1.7 16v	60/68x25	83->	60504224	**C500**	DESTRO
Eccetto 1.7 16v	60/68x25	83->	60504225	**C501**	SINISTRO
1.7 16v	60/68x25	91->	60586520	**C502**	DESTRO
1.7 16v	60/68x25	91->	60586519	**C503**	SINISTRO
1.7 16v	60/68x25	91->	60504226	**C504**	PULEGGIA
ALFA 145/146					
1.3 - 1.6	60/68x25	94->	60504224	**C500**	DESTRO
1.3 - 1.6	60/68x25	94->	60504225	**C501**	SINISTRO
1.7 16v	60/68x25	94->	60586520	**C502**	DESTRO
1.7 16v	60/68x25	94->	60586519	**C503**	SINISTRO
1.7 16v	60/68x25	94->	60504226	**C504**	PULEGGIA
1.9 Turbo Diesel	10,5x61x33/57,5	94->	60811488	**C528**	MOBILE
1.9 Turbo Diesel	10,5x61	94->	60811487	**C529**	FISSO
1.9 Turbo Diesel (Comandi vari)	20x80x23	93->	60805460	**C539**	FISSO
Turbo Diesel (Condizionatore)	20x80x23	94->	60805460	**C539**	FISSO
1.4 i.e 16V TS	8,5x57x29/35	96-01	60671573	**C739**	FISSO
1.4-1.6-1.8 16v TS	8,5x57x29/35	96-01	60671573	**C739**	FISSO
1.6 i.e. 16V TS	8,5x57x29/35	96-01	60671573	**C739**	FISSO
1.8 i.e. 16V	8,5x57x29/35	98-01	60671573	**C739**	FISSO
1.8 i.e. 16V TS	8,5x57x29/35	96-98	60671573	**C739**	FISSO
2.0 16V Quadrifoglio	8,5x57x29/35	98-01	60671573	**C739**	FISSO
2.0 16V TS	8,5x57x29/35	95-01	60671573	**C739**	FISSO
2.0 i.e 16V TS	8,5x57x29/35	95-01	60671573	**C739**	FISSO
1.9 JTD	10,2x53x29/31,5	99-01	7763644	**C740**	
1.9 Turbo Diesel	10,2x53x29/31,5	94-99	7763644	**C740**	
1.4 i.e 16V TS	17x65,3x29	96-01	60814110	**C754**	MOBILE
1.6 16V TS	17x65,3x29	96-01	60814110	**C754**	MOBILE
1.6 i.e 16V	17x65,3x29	96-01	60814110	**C754**	MOBILE
1.7 i.e 16V	17x65,3x29	99-01	60814110	**C754**	MOBILE
1.7 i.e 16V TS	17x65,3x29	96-98	60814110	**C754**	MOBILE
1.9 JTD	17x65,3x29	99-01	60814110	**C754**	MOBILE
2.0 i.e 16V TS	17x65,3x29	95-01	60814110	**C754**	MOBILE
1.9 JTD	8,2x64,778x30/41	99-01	60813592	**C767**	
1.8 i.e. 16 V/TS	8,1x65x29	96-01	60812622	**C778**	
2.0 16V Quadrifoglio	8,1x65x29	98-01	60812622	**C778**	
2.0 16V TS	8,1x65x29	95-01	60812622	**C778**	
ALFA 147					
1.6 16V TS	8,5x57x29/35	01->	60671573	**C739**	FISSO
1.6 16V TS Eco	8,5x57x29/35	01->	60671573	**C739**	FISSO
2.0 16V TS	8,5x57x29/35	01->	60671573	**C739**	FISSO
1.9 JTD/16V	10,2x53x29/31,5	01-03	55187100	**C740**	
1.6 16V TS	17x65,3x29	01->	60814110	**C754**	MOBILE
1.9 JTD	17x65,3x29	01->	60814110	**C754**	MOBILE
2.0 16V TS	17x65,3x29	01->	60814110	**C754**	MOBILE
1.9 JTD/16V	8,2x64,778x30/41	01->	60813592	**C767**	
2.0 16V TS	8,1x65x29	01->	60812622	**C778**	

TENDICINGHIA DISTRIBUZIONE
BELT TIGHTENERS
TENDEURS DE COURROIE

follows ALFA ROMEO

MODELLO	DIMENSIONI	ANNO	RIF ORIGINALE	RIF CORAM	NOTE
ALFA 155					
1.6 16V TS	17x65,3x29	96-98	60814110	**C754**	MOBILE
2.0 Turbo4x4	10,5x56x27/39,5	92->	60805833	**C522**	MOBILE
1.9 Turbo Diesel	10,5x61x33/57,5	92->	60811488	**C528**	MOBILE
1.9 Turbo Diesel	10,5x61	92->	60811487	**C529**	FISSO
1.9 Turbo Diesel (Condizionatore)	20x80x23	92->	60805460	**C539**	FISSO
1.9 Turbo Diesel -1.7-1.8 T.Spark (Comandi vari)	20x80x23	91-97	60805460	**C539**	FISSO
2.0 T.S. 8v (Comandi vari)	20x80x23	93-95	60805460	**C539**	FISSO
1.6 16V TS	8,5x57x29/35	96-98	60671573	**C739**	FISSO
1.7 16V TS	8,5x57x29/35	96-97	60671573	**C739**	FISSO
2.0 16V TS	8,5x57x29/35	95-97	60671573	**C739**	FISSO
1.7 16V TS	17x65,3x29	96-97	60814110	**C754**	MOBILE
2.0 16V TS	17x65,3x29	95-97	60814110	**C754**	MOBILE
1.7 TS 16V/ 2.0 TS 16V	8,1x65x29	95-97	60812622	**C778**	
ALFA 156					
1.6 16V TS	8,5x57x29/35	97->	60671573	**C739**	FISSO
1.6 16V TS Sportwagon	8,5x57x29/35	00->	60671573	**C739**	FISSO
1.6-1.8-2.0 16v	8,5x57x29/35	97-00	60671573	**C739**	FISSO
1.8 16V TS	8,5x57x29/35	97-00	60671573	**C739**	FISSO
2.0 16V TS	8,5x57x29/35	97-02	60671573	**C739**	FISSO
2.0 JTS	8,5x57x29/35	02->	60671573	**C739**	FISSO
1.9 JTD /Sportwagon	10,2x53x29/31,5	97-02	7763644	**C740**	FISSO
1.9-2.4 Turbo Diesel/JTD	10,2x53x29/31,5	97-02	7763644	**C740**	FISSO
2.4 JTD/ Sportwagon	10,2x53x29/31,5	97-02	7763644	**C740**	FISSO
1.6 16V TS	17x65,3x29	97->	60814110	**C754**	MOBILE
1.8 16V TS	17x65,3x29	97->	60814110	**C754**	MOBILE
1.9 JTD	17x65,3x29	97->	60814110	**C754**	MOBILE
2.0 16V TS	17x65,3x29	97-02	60814110	**C754**	MOBILE
2.0 JTS 16V	17x65,3x29	02->	60814110	**C754**	MOBILE
2.4 JTD/ Sportwagon	17x65,3x29	97-02	60814110	**C754**	MOBILE
1.9 JTD /Sportwagon	8,2x64,778x30/41	97-01	60813592	**C767**	
2.4 JTD/ Sportwagon	8,2x64,778x30/41	97-03	60813592	**C767**	
1.8 16V TS	8,1x65x29	97-00	60812622	**C778**	
2.0 16V TS	8,1x65x29	97-02	60812622	**C778**	
1.8 16V TS/ 2.0 16V TS/ Sportwagon	8,1x65x29	00-02	60812622	**C778**	
ALFA 164					
2.0 Turbo	10,5x60x25/48	87->	60800148	**C523**	MOBILE
2.0 T. Spark (Comandi vari)	20x80x23	87-97	60805460	**C539**	FISSO
ALFA 166					
2.0 TS	8,5x57x29/35	98->	60671573	**C739**	FISSO
2.4 JTD	10,2x53x29/31,5	98->	7763644	**C740**	FISSO

TENDICINGHIA DISTRIBUZIONE
BELT TIGHTENERS
TENDEURS DE COURROIE

follows ALFA ROMEO

MODELLO	DIMENSIONI	ANNO	RIF ORIGINALE	RIF CORAM	NOTE
ALFA 166					
2.0 TS	17x65,3x29	98->	60814110	**C754**	MOBILE
2.4 JTD	8,2x64,778x30/41	98-03	60813592	**C767**	
2.0 TS	8,1x65x29	98-00	60812622	**C778**	
ALFASUD					
1.2-1.4-1.5-1.6	60/68x25	71->	60504224	**C500**	DESTRO
1.2-1.4-1.5-1.6	60/68x25	71->	60504225	**C501**	SINISTRO
ARNA					
1.2-1.4	60/68x25	83->	60504224	**C500**	DESTRO
1.2-1.4	60/68x25	83->	60504225	**C501**	SINISTRO
GT					
2.0 JTS	8,5x57x29/35	03->	60671573	**C739**	FISSO
1.9 JTD	10,2x53x29/31,5	03->	7763644	**C740**	FISSO
1.9 JTD	8,2x64,778x30/41	03->	60813592	**C767**	
GTV					
1.8-2.0 16v	8,5x57x29/35	95->	60671573	**C739**	FISSO
2.0 16V TS	8,5x57x29/35	95->	60671573	**C739**	FISSO
2.0 JTS	8,5x57x29/35	03->	60671573	**C739**	FISSO
1.8 16V	17x65,3x29	98->	60814110	**C754**	MOBILE
2.0 16V TS	17x65,3x29	95->	60814110	**C754**	MOBILE
1.8 16V	8,1x65x29	98->	60812622	**C778**	
2.0 TS 16V	8,1x65x29	95-00	60812622	**C778**	
SPIDER					
1.8 16V / 2.0 T.S 16v / 2.0 JTS	8,5x57x29/35	95->	60671573	**C739**	FISSO
1.8 16V	17x65,3x29	98->	60814110	**C754**	MOBILE
2.0 16V TS	17x65,3x29	95->	60814110	**C754**	MOBILE
1.8 16V/2.0 TS 16V	8,1x65x29	95-00	60812622	**C778**	
SPRINT					
1.4-1.7	60/68x25	78->	60504224	**C500**	DESTRO
1.4-1.7	60/68x25	78->	60504225	**C501**	SINISTRO

AUDI

MODELLO	DIMENSIONI	ANNO	RIF ORIGINALE	RIF CORAM	NOTE
AUDI 80					
2.6-2.8 6v	72x27/31,5	91->	078109243C	**C727**	MOBILE
Quattro 2.6-2.8 6v	72x27/31,5	91->	078109243C	**C727**	MOBILE
2.6-2.8 6v	10,3x59/67x31	91-94	078109244G	**C728**	
2.0-2.2	8,2x74,5x27/35	84->	069109243B	**C729**	FISSO
Quattro 2.3	8,2x74,5x27/35	91->	069109243B	**C729**	FISSO
1.6-1.9 Diesel/ Turbo Diesel	10x72/82x30/35	79->	068109243F	**C730**	MOBILE
1.3-1.5-1.6-1.7-1.8-2.0	10x72/83x25/28	72->	026109243E	**C731**	MOBILE
Quattro 1.8-1.9-2.0-2.2	10x72/83x25/28	85->	026109243E	**C731**	MOBILE
1.9 TD /TDI/ AVANT	M8x1,25x78x26	91-96	028145278E	**C774**	
1.9 TDI	8X28,5X29/31,5	91-94	028109244	**C787**	
1.9 TDI AVANT	8X28,5X29/31,5	92-96	028109244	**C787**	
AUDI 80 (8C,B4)					
1.9 TD - 1.9 TDI	64/68x30/40,3	91-94	028109243 E	**C803**	
AUDI 80 (89,89Q,8A,B3)					
2.0 - 2.0 quattro	72/82x24/26	90-91	048109243 A	**C805**	
AUDI 80 (8C,B4)					
2.0 - 2.0 E - 2.0 E quattro	72/82x24/26	91-94	048109243 A	**C805**	
AUDI 80 (89,89Q,8A,B3)					
2.0 E 16V - 2.0 E 16V quattro	11x72/82x30/33	90-91	027109243	**C804**	
AUDI 80 (8C,B4)					
2.0 E 16V - 2.0 E 16V quattro	11x72/82x30/33	92-94	027109243	**C804**	
2.3 E - 2.3 E quattro	8,5x69x27,5/35,5	91-94	074109243	**C797**	
2.6 - 2.6 quattro	8x72x27/31,5	92-94	078109243 K	**C798**	
2.6 - 2.6 quattro	8,4x59x28,2	92-94	078109244 F	**C799**	
2.6 - 2.6 quattro	8,3x90x25/28,5	92-94	078903341 J	**C800**	
2.8 - 2.8 quattro	8x72x27/31,5	91-94	078109243 K	**C798**	
2.8 - 2.8 quattro	8,4x59x28,2	91-94	078109244 F	**C799**	
2.8 - 2.8 quattro	8,3x90x25/28,5	91-94	078903341 J	**C800**	
S2 quattro	8,4x59x28,2	93-94	078109244 F	**C799**	

TENDICINGHIA DISTRIBUZIONE
BELT TIGHTENERS
TENDEURS DE COURROIE

follows AUDI

MODELLO	DIMENSIONI	ANNO	RIF ORIGINALE	RIF CORAM	NOTE
AUDI 80 Avant (8C,B4)					
1.9 TD - 1.9 TDI	64/68x30/40,3	91-96	028109243 E	**C803**	
2.0 E 16V	11x72/82x30/33	93-96	027109243	**C804**	
2.0 E 16V quattro	11x72/82x30/33	92-95	027109243	**C804**	
2.3 E - 2.3 E quattro	8,5x69x27,5/35,5	91-96	074109243	**C797**	
2.6 - 2.6 quattro - 2.8 - 2.8 quattro	10,3x59/67x31	91-96	078109244G	**C728**	
2.6 - 2.8	8x72x27/31,5	91-96	078109243 K	**C798**	
2.6 quattro - 2.8 quattro	8x72x27/31,5	92-95	078109243 K	**C798**	
2.6 - 2.6 quattro	8,4x59x28,2	92-96	078109244 F	**C799**	
2.8 - 2.8 quattro	8,4x59x28,2	92-95	078109244 F	**C799**	
RS2 quattro (P1) - S2 quattro	8,4x59x28,2	93-95	078109244 F	**C799**	
2.6	8,3x90x25/28,5	92-96	078903341 J	**C800**	
2.8	8,3x90x25/28,5	91-96	078903341 J	**C800**	
2.6 quattro - 2.8 quattro	8,3x90x25/28,5	92-95	078903341 J	**C800**	
AUDI 90					
1.6 Diesel -Turbo Diesel	10x72/83x30/35	84->	068109243F	**C730**	MOBILE
2.0-2.0 Quattro	10x72/83x25/28	87->	026109243E	**C731**	MOBILE
2.0-2.2-2.3	8,2x74,5x27/35	84->	069109243B	**C729**	FISSO
AUDI 90 (89,89Q,8A,B3)					
2.0 - 2.0 20V	8,5x69x27,5/35,5	88-91	074109243	**C797**	
AUDI 90 (81,85,B2)					
2.2 - 2.2 E quattro	8,5x69x27,5/35,5	84-87	074109243	**C797**	
AUDI 90 (89,89Q,8A,B3)					
2.2 E - 2.2 E quattro - 2.3 E	8,5x69x27,5/35,5	87-91	074109243	**C797**	
AUDI 90					
Quattro 2.2	8,2x74,5x27/35	84->	069109243B	**C729**	FISSO
Quattro 2.0-2.3 20 Valvole	8,2x74,5x27/35	88->	069109243B	**C729**	FISSO
AUDI 90 (89,89Q,8A,B3)					
2.3 E 20V	8,5x69x27,5/35,5	88-91	074109243	**C797**	
2.3 E quattro	8,5x69x27,5/35,5	87-91	074109243	**C797**	

TENDICINGHIA DISTRIBUZIONE
BELT TIGHTENERS
TENDEURS DE COURROIE

follows AUDI

MODELLO	DIMENSIONI	ANNO	RIF ORIGINALE	RIF CORAM	NOTE
AUDI 100					
1.6-1.8-2.0 Avant	10x72/83x25/28	74->	026109243E	**C731**	MOBILE
1.8 Quattro	10x72/83x25/28	85-91	026109243E	**C731**	MOBILE
1.9	8,2x74,5x27/35	80->	069109243B	**C729**	FISSO
AUDI 100 (44,44Q,C3)					
1.9	8,5x69x27,5/35,5	82-84	074109243	**C797**	
AUDI 100					
2.0	8,2x74,5x27/35	84->	069109243B	**C729**	FISSO
2.0 Diesel-Turbo Diesel	8,2x74,5x27/35	78->	069109243B	**C729**	FISSO
AUDI 100 (44,44Q,C3)					
2.0 Cat.	8,5x69x27,5/35,5	88-90	074109243	**C797**	
AUDI 100 (4A,C4)					
2.0 - 2.0 E	72/82x24/26	90-94	048109243A	**C805**	
2.0 E quattro	72/82x24/26	90-92	048109243 A	**C805**	
2.0 E 16V - 2.0 E 16V quattro	11x72/82x30/33	92-94	027109243	**C804**	
AUDI 100					
2.2	8,2x74,5x27/35	76->	069109243B	**C729**	FISSO
AUDI 100 (44,44Q,C3)					
2.2	8,5x69x27,5/35,5	84-88	074109243	**C797**	
2.2 Cat.- 2.2 quattro Cat.	8,5x69x27,5/35,5	89-90	074109243	**C797**	
2.2 quattro	8,5x69x27,5/35,5	84-88	074109243	**C797**	
2.2 E Turbo quattro - 2.2 Turbo	8,5x69x27,5/35,5	86-90	074109243	**C797**	
AUDI 100					
2.3	8,2x74,5x27/35	85->	069109243B	**C729**	FISSO
AUDI 100 (44,44Q,C3)					
2.3 quattro	8,5x69x27,5/35,5	90-90	074109243	**C797**	
2.3 E	8,5x69x27,5/35,5	86-90	074109243	**C797**	
2.3 E quattro	8,5x69x27,5/35,5	86-90	074109243	**C797**	

TENDICINGHIA DISTRIBUZIONE
BELT TIGHTENERS
TENDEURS DE COURROIE

follows AUDI

MODELLO	DIMENSIONI	ANNO	RIF ORIGINALE	RIF CORAM	NOTE
AUDI 100					
2.2-2.3	8,2x74,5x27/35	84->	069109243B	**C729**	FISSO
2.4 Diesel	8,2x74,5x27/35	91->	069109243B	**C729**	FISSO
AUDI 100 (4A,C4)					
2.6 - 2.6 quattro	8,4x59x28,2	92-94	078109244 F	**C799**	
2.6 - 2.6 quattro	8,3x90x25/28,5	92-94	078903341 J	**C800**	
2.8 E - 2.8 E quattro	8,4x59x28,2	90-94	078109244 F	**C799**	
2.8 E - 2.8 E quattro	8,3x90x25/28,5	90-94	078903341 J	**C800**	
S4 Turbo quattro	8,4x59x28,2	91-94	078109244 F	**C799**	
AUDI 100					
Quattro 2.2-2.3	8,2x74,5x27/35	84->	069109243B	**C729**	FISSO
2.6-2.8	72x27/31,5	90->	078109243C	**C727**	MOBILE
Quattro 2.6-2.8	72x27/31,5	90->	078109243C	**C727**	MOBILE
AUDI 100 Avant					
2.0 E Cat. (44,44Q,C3)	8,5x69x27,5/35,5	88-90	074109243	**C797**	
AUDI 100 Avant (4A,C4)					
2.0 E	72/82x24/26	91-94	048109243 A	**C805**	
2.0 E quattro	72/82x24/26	90-92	048109243 A	**C805**	
AUDI 100 Avant					
2.2 (44,44Q,C3)	8,5x69x27,5/35,5	84-88	074109243	**C797**	
2.2 Cat. (44,44Q,C3)	8,5x69x27,5/35,5	89-90	074109243	**C797**	
2.2 quattro (44,44Q,C3)	8,5x69x27,5/35,5	84-88	074109243	**C797**	
2.2 quattro Cat. (44,44Q,C3)	8,5x69x27,5/35,5	89-90	074109243	**C797**	
2.2 turbo - 2.2 turbo quattro (44,44Q,C3)	8,5x69x27,5/35,5	86-90	074109243	**C797**	
2.3 - 2.3 E quattro (44,44Q,C3)	8,5x69x27,5/35,5	86-90	074109243	**C797**	
AUDI 100 Avant(4A,C4)					
2.6 - 2.6 quattro	8,4x59x28,2	92-94	078109244 F	**C799**	
2.6 - 2.6 quattro	8,3x90x25/28,5	92-94	078903341 J	**C800**	
2.8 E - 2.8 E quattro - S4 Turbo quattro	8,4x59x28,2	91-94	078109244 F	**C799**	
2.8 E - 2.8 E quattro	8,3x90x25/28,5	91-94	078903341 J	**C800**	
AUDI 200					
2.2-2.2 Quattro	8,2x74,5x27/35	83->	069109243B	**C729**	FISSO

TENDICINGHIA DISTRIBUZIONE
BELT TIGHTENERS
TENDEURS DE COURROIE

follows AUDI

MODELLO	DIMENSIONI	ANNO	RIF ORIGINALE	RIF CORAM	NOTE
AUDI 200 (44, 44Q)					
2.2 Turbo - 2.2 Turbo quattro - 2.3	8,5x69x27,5/35,5	85-91	074109243	**C797**	
AUDI 200 Avant (44,44Q)					
2.2 Turbo	8,5x69x27,5/35,5	85-91	074109243	**C797**	
2.2 Turbo quattro	8,5x69x27,5/35,5	83-91	074109243	**C797**	
2.3	8,5x69x27,5/35,5	86-91	074109243	**C797**	
A2					
1.2 TDI/ 1.4 TDI	8,3X28,5X34	00-01	045109244A	**C783**	
1.4 TDI	40X36	00-03	038109244JJ	**C784**	
A3					
1.9 TDI	10x80x29/47	96-01	038109244B	**C788**	FISSO
1.9 TDI	28,5X29X47	96-01	038109244E	**C789**	
1.9 TDI	8X28,5X29	96-01	058109244	**C786**	
1.9 TDI	8X65X25/28	96-01	058109245	**C773**	
1.9 TDI / Quattro	8,3X28,5X34	00->	058109246	**C783**	
1.9 TDI / Quattro/Sportback	40X36	00->	058109247	**C784**	
2.0 TDI Sportback	40X36	04->	058109248	**C784**	
					058109249
A4					
1.6	60,5x19,5	95-00	058109250	**C795**	
1.8 - 1.8 quattro	60,5x19,5	95-00	058109251	**C795**	
1.8 T - 1.8 T quattro	60,5x19,5	95-00	058109252	**C795**	
1.8-1.8T-Quattro/Avant	8X28,5X29	95-01	058109253	**C786**	
A4 (8D2,B5)					
1.9 TDI	60,5x19,5	95-00	058109254	**C795**	
A4 (8E2,B6)					
1.9 TDI	60,5x19,5	00->	058109255	**C795**	
A4					
1.9 TDI	8X28,5X29/31,5	95-00	058109256	**C787**	

TENDICINGHIA DISTRIBUZIONE
BELT TIGHTENERS
TENDEURS DE COURROIE

follows AUDI

MODELLO	DIMENSIONI	ANNO	RIF ORIGINALE	RIF CORAM	NOTE
A4 (8D2,B5)					
1.9 TDI	64/68x30/40,3	95-00	028109243E	**C803**	
1.9 TDI	15x77/83x23	95-00	028145278J	**C807**	
1.9 TDI quattro	60,5x19,5	96-00	058109257	**C795**	
1.9 TDI quattro	64/68x30/40,3	96-00	028109243 E	**C803**	
A4 (8E2,B6)					
1.9 TDI quattro	60,5x19,5	01->	058109258	**C795**	
A4 (8D2,B5)					
1.9 TDI quattro	15x77/83x23	96-00	028145278J	**C807**	
A4					
1.9 TDI/ Quattro	8X28,5X29/31,5	96-00	058109259	**C787**	
1.9 TDI/ Quattro	8,3X28,5X34	00->	058109260	**C783**	
1.9 TDI Avant	8X28,5X29/31,5	96-01	058109261	**C787**	
1.9 TDI/ Quattro/Avant	40X36	00->	058109262	**C784**	
2.4		95->	058109263	**C728**	
A4 (8E2, B6)					
2.4	72x32,5	01->	078109243Q	**C801**	
2.4	10,3x59/66x35,5	01->	078109244 J	**C802**	
A4 (8D2, B5)					
2.4- 2.4 quattro	72x32,5	97-00	078109243 Q	**C801**	
2.4 - 2.4 quattro	10,3x59/66x35,5	97-00	078109244 J	**C802**	
A4					
2.6-2.8	10,3x59/67x31	94-97	058109264	**C728**	
2.6-2.8	72x27/31,5	94->	058109265	**C727**	MOBILE
Quattro 2.6-2.8	72x27/31,5	94->	058109266	**C727**	MOBILE
Quattro 2.6-2.8	10,3x59/67x31	94-97	058109267	**C728**	
A4 (8D2,B5)					
2.6 - 2.6 quattro	8x72x27/31,5	95-00	078109243 K	**C798**	
2.8 -2.8 quattro	8x72x27/31,5	95-97	078109243 K	**C798**	
2.6 - 2.6 quattro	8,3x90x25/28,5	95-00	078903341 J	**C800**	
2.8 - 2.8 quattro	8,3x90x25/28,5	95-97	078903341 J	**C800**	
2.8 - 2.8 quattro	72x32,5	96-00	078109243Q	**C801**	
2.8 - 2.8 quattro	10,3x59/66x35,5	96-00	078109244 J	**C802**	
S4 quattro	72x32,5	97-00	078109243Q	**C801**	
S4 quattro	10,3x59/66x35,5	97-00	078109244 J	**C802**	

TENDICINGHIA DISTRIBUZIONE
BELT TIGHTENERS
TENDEURS DE COURROIE

follows AUDI

MODELLO	DIMENSIONI	ANNO	RIF ORIGINALE	RIF CORAM	NOTE
A4 AVANT					
1.6	60,5x19,5	96-00	058260511	**C795**	
1.8 - 1.8 quattro	60,5x19,5	96-01	058260511	**C795**	
1.8 T - 1.8 T quattro	60,5x19,5	96-01	058260511	**C795**	
A4 AVANT (8D5,B5)					
1.9 TDI - 1.9 TDI quattro	60,5x19,5	96-01	058260511	**C795**	
1.9 TDI - 1.9 TDI quattro	64/68x30/40,3	96-01	028109243 E	**C803**	
1.9 TDI - 1.9 TDI quattro	15x77/83x23	96-01	028145278J	**C807**	
A4 AVANT (8E5,B6)					
1.9 TDI	60,5x19,5	01->	058260511	**C795**	
1.9 TDI quattro	60,5x19,5	01->	058260511	**C795**	
A4 AVANT					
1.9 TDI/ Quattro	8X28,5X29/31,5	96-01	028109244	**C787**	
1.9 TDI/ Quattro	8,3X28,5X34	00-01	045109244A	**C783**	
A4 AVANT (8D5,B5)					
1.9 DUO	64/68x30/40,3	98-01	028109243 E	**C803**	
A4 AVANT (8E5, B6)					
2.4	72x32,5	01->	078109243Q	**C801**	
2.4	10,3x59/66x35,5	01->	078109244 J	**C802**	
A4 AVANT (8D5, B5)					
2.4 - 2.4 quattro	72x32,5	97-01	078109243Q	**C801**	
2.4 - 2.4 quattro	10,3x59/66x35,5	97-01	078109244 J	**C802**	
2.6 - 2.6 quattro	8x72x27/31,5	96-01	078109243 K	**C798**	
2.6 - 2.6 quattro	8,3x90x25/28,5	96-01	078903341 J	**C800**	
2.8 - 2.8 quattro	8x72x27/31,5	96-96	078109243 K	**C798**	
2.8 - 2.8 quattro	8,3x90x25/28,5	96-96	078903341 J	**C800**	
2.8 - 2.8 quattro	72x32,5	96-01	078109243Q	**C801**	
2.8 - 2.8 quattro	10,3x59/66x35,5	96-01	078109244 J	**C802**	
RS4 quattro	72x32,5	00-01	078109243Q	**C801**	
RS4 quattro	10,3x59/66x35,5	00-01	078109244 J	**C802**	
S4 quattro	72x32,5	97-01	078109243Q	**C801**	
S4 quattro	10,3x59/66x35,5	97-01	078109244 J	**C802**	

TENDICINGHIA DISTRIBUZIONE
BELT TIGHTENERS
TENDEURS DE COURROIE

follows AUDI

MODELLO	DIMENSIONI	ANNO	RIF ORIGINALE	RIF CORAM	NOTE
A4 CABRIOLET (8H7)					
2.4	72X32,5	02->	078109243Q	**C801**	
2.4	10,3x59/66x35,5	02->	078109244 J	**C802**	
A6 (4A,C4)					
1.8 - 1.8 quattro	60,5x19,5	95-97	058260511	**C795**	
A6 (4B,C5)					
1.8 - 1.8 T - 1.8 T quattro - 1.9 TDI	60,5x19,5	97->	058260511	**C795**	
A6					
1.8-1.8T-Quattro/Avant	8X28,5X29	95->	058109244	**C786**	
1.9 TDI (66KW)/ Avant	8X28,5X29/31,5	94-97	028109244	**C787**	
1.9 TDI (81KW)/Avant	8X28,5X29/31,5	97->	028109244	**C787**	
A6 (4A,C4)					
1.9 TDI	64/68x30/40,3	94-97	028109243 E	**C803**	
A6 (4B,C5)					
1.9 TDI	64/68x30/40,3	97->	028109243 E	**C803**	
A6					
1.9 TDI	M8x1,25x78x26	94-97	028145278E	**C774**	
1.9 TDI	8,3X28,5X34	00-01	045109244A	**C783**	
A6 (4B,C5)					
1.9 TDI	15x77/83x23	97-05	028145278J	**C807**	
A6 (4A,C4)					
2.0	72/82x24/26	94-97	048109243 A	**C805**	
2.0 16V - 2.0 16V quattro	11x72/82x30/33	94-97	027109243	**C804**	
A6 (4B,C5)					
2.4 - 2.4 quattro	72x32,5	97->	078109243Q	**C801**	
2.4 - 2.4 quattro	10,3x59/66x35,5	97->	078109244 J	**C802**	

TENDICINGHIA DISTRIBUZIONE
BELT TIGHTENERS
TENDEURS DE COURROIE

follows AUDI

MODELLO	DIMENSIONI	ANNO	RIF ORIGINALE	RIF CORAM	NOTE
A6					
2.6-2.8	72x27/31,5	94->	078109243C	**C727**	MOBILE
2.4-2.6-2.8		94->	078109244G	**C728**	FISSO
Quattro 2.6-2.8	72x27/31,5	94->	078109243C	**C727**	MOBILE
Quattro 2.6-2.8		94->	078109244G	**C728**	FISSO
A6 (4A,C4)					
2.6 - 2.6 quattro - 2.8 - 2.8 quattro	8x72x27/31,5	94-97	078109243 K	**C798**	
2.6 - 2.6 quattro - 2.8 - 2.8 quattro	8,4x59x28,2	94-97	078109244 F	**C799**	
2.6 - 2.6 quattro - 2.8 - 2.8 quattro	8,3x90x25/28,5	94-97	078903341 J	**C800**	
A6 (4B,C5)					
2.7 T	72x32,5	99->	078109243Q	**C801**	
2.7 T	10,3x59/66x35,5	99->	078109244 J	**C802**	
2.7 T quattro	72x32,5	97->	078109243Q	**C801**	
2.7 T quattro	10,3x59/66x35,5	97->	078109244 J	**C802**	
2.8 - 2.8 quattro	72x32,5	97->	078109243Q	**C801**	
A6 (4A,C4)					
2.8 - 2.8 quattro	72x32,5	95-97	078109243Q	**C801**	
A6 (4B,C5)					
2.8 - 2.8 quattro	10,3x59/66x35,5	97->	078109244 J	**C802**	
A6 (4A,C4)					
S6 Turbo quattro	8,4x59x28,2	94-97	078109244 F	**C799**	
A6 Avant (4A,C4)					
1.8 - 1.8 quattro	60,5x19,5	95-97	058260511	**C795**	
A6 Avant (4B,C5)					
1.8 - 1.8 T - 1.8 T quattro - 1.9 TDI	60,5x19,5	97->	058260511	**C795**	
A6 Avant (4A,C4)					
1.9 TDI	64/68x30/40,3	94-97	028109243 E	**C803**	

TENDICINGHIA DISTRIBUZIONE
BELT TIGHTENERS
TENDEURS DE COURROIE

follows AUDI

MODELLO	DIMENSIONI	ANNO	RIF ORIGINALE	RIF CORAM	NOTE
A6 Avant (4B,C5)					
1.9 TDI	64/68x30/40,3	97->	028109243 E	**C803**	
1.9 TDI	15x77/83x23	97-05	028145278J	**C807**	
A6 Avant (4A,C4)					
2.0	72/82x24/26	94-97	048109243 A	**C805**	
2.0 16V - 2.0 16V quattro	11x72/82x30/33	94-97	027109243	**C804**	
A6 Avant (4B,C5)					
2.4 - 2.4 quattro	72x32,5	97->	078109243Q	**C801**	
2.4 - 2.4 quattro	10,3x59/66x35,5	97->	078109244 J	**C802**	
A6 Avant (4A,C4)					
2.6 - 2.6 quattro - 2.8 - 2.8 quattro	10,3x59/67x31	94-97	078109244G	**C728**	
2.6 - 2.6 quattro - 2.8 - 2.8 quattro	8x72x27/31,5	94-97	078109243 K	**C798**	
2.6 - 2.6 quattro - 2.8 - 2.8 quattro	8,4x59x28,2	94-97	078109244 F	**C799**	
2.6 - 2.6 quattro - 2.8 - 2.8 quattro	8,3x90x25/28,5	94-97	078903341 J	**C800**	
A6 Avant (4B,C5)					
2.7 T	72x32,5	99->	078109243Q	**C801**	
2.7 T	10,3x59/66x35,5	99->	078109244 J	**C802**	
2.7 T quattro	10,3x59/66x35,5	97->	078109244 J	**C802**	
2.7 T quattro	72x32,5	97->	078109243Q	**C801**	
2.8 - 2.8 quattro	10,3x59/66x35,5	97->	078109244 J	**C802**	
A6 Avant (4A,C4)					
2.8 - 2.8 quattro	72x32,5	95-97	078109243Q	**C801**	
2.8 - 2.8 quattro	10,3x59/66x35,5	95-97	078109244 J	**C802**	
A6 Avant (4B,C5)					
2.8 - 2.8 quattro	72x32,5	97->	078109243Q	**C801**	
A6 Avant (4A,C4)					
S6 Turbo quattro	8,4x59x28,2	94-97	078109244 F	**C799**	
A8					
2.8	72x27/31,5	94->	078109243C	**C727**	MOBILE

TENDICINGHIA DISTRIBUZIONE
BELT TIGHTENERS
TENDEURS DE COURROIE

follows AUDI

MODELLO	DIMENSIONI	ANNO	RIF ORIGINALE	RIF CORAM	NOTE
A8 (4D2, 4D8)					
2.8	10,3x59/67x31	94-96	078109244G	**C728**	
2.8 quattro	10,3x59/67x31	94-96	078109244G	**C728**	
2.8 - 2.8 quattro	8x72x27/31,5	94-96	078109243 K	**C798**	
2.8 - 2.8 quattro	8,4x59x28,2	94-96	078109244 F	**C799**	
2.8 - 2.8 quattro	8,3x90x25/28,5	94-96	078903341 J	**C800**	
2.8 - 2.8 quattro	72x32,5	96-02	078109243Q	**C801**	
2.8 - 2.8 quattro	10,3x59/66x35,5	96-02	078109244 J	**C802**	
ALLROAD (4BH)					
2.7 T quattro	72x32,5	00->	078109243Q	**C801**	
2.7 T quattro	10,3x59/66x35,5	00->	078109244 J	**C802**	
CABRIOLET					
1.8	60,5x19,5	97-00	0582260511	**C795**	
1.8	8X28,5X29	97-00	058109244	**C786**	
1.9 TDI	M8x1,25x78x26	95-00	028145278E	**C774**	
1.9 TDI	8X28,5X29/31,5	95-00	028109244	**C787**	
CABRIOLET (8G7,B4)					
1.9 TDI	64/68x30/40,3	95-00	028109243 E	**C803**	
2.0 E	72/82x24/26	93-98	048109243 A	**C805**	
2.3 E	8,5x69x27,5/35,5	91-94	074109243	**C797**	
CABRIOLET					
2.6 - 2.8	72x27/31,5	92->	078109243C	**C727**	MOBILE
2.6 - 2.8	10,3x59/67x31	92-00	078109244G	**C728**	
CABRIOLET (8G7,B4)					
2.6 - 2.8	8x72x27/31,5	92-00	078109243 K	**C798**	
2.6 - 2.8	8,4x59x28,2	92-00	078109244 F	**C799**	
2.6 - 2.8	8,3x90x25/28,5	92-00	078903341 J	**C800**	
COUPE'					
1.6-1.8-1.9-2.0	10x72/83x25/28	81->	026109243E	**C731**	MOBILE
2.0	8,2x74,5x27/35	81->	069109243B	**C729**	FISSO

TENDICINGHIA DISTRIBUZIONE
BELT TIGHTENERS
TENDEURS DE COURROIE

follows AUDI

MODELLO	DIMENSIONI	ANNO	RIF ORIGINALE	RIF CORAM	NOTE
COUPE' (89,8B)					
2.0 16V	11x72/82x30/33	92-96	027109243	**C804**	
COUPE'					
2.2-2.3	8,2x74,5x27/35	81->	069109243B	**C729**	FISSO
2.6-2.8	72x27/31,5	91->	078109243C	**C727**	MOBILE
2.6 - 2.6 quattro	10,3x59/67x31	92-96	078109244G	**C728**	
2.8 - 2.8 quattro	10,3x59/67x31	91-96	078109244G	**C728**	
COUPE' (81,85)					
2.2 quattro - 2.2 GT	8,5x69x27,5/35,5	84-88	074109243	**C797**	
2.3 - 2.3 quattro	8,5x69x27,5/35,5	87-88	074109243	**C797**	
COUPE' (89,8B)					
2.2 quattro	8,5x69x27,5/35,5	88-91	074109243	**C797**	
2.3 - 2.3 quattro	8,5x69x27,5/35,5	88-96	074109243	**C797**	
2.6 - 2.6 quattro	8x72x27/31,5	92-96	078109243 K	**C798**	
2.6 - 2.6 quattro	8,4x59x28,2	92-96	078109244 F	**C799**	
2.6 - 2.6 quattro	8,3x90x25/28,5	92-96	078903341 J	**C800**	
2.8 - 2.8 quattro	8x72x27/31,5	91-96	078109243 K	**C798**	
2.8 - 2.8 quattro	8,4x59x28,2	91-96	078109244 F	**C799**	
2.8 - 2.8 quattro	8,3x90x25/28,5	91-96	078903341 J	**C800**	
S2 quattro	8,4x59x28,2	92-96	078109244 F	**C799**	
COUPE' QUATTRO					
2.0-2.2-2.3	8,2x74,5x27/35	84->	069109243B	**C729**	FISSO
2.6-2.8 6v	72x27/31,5	91->	078109243C	**C727**	MOBILE
2.6 6v		92->	078109244G	**C728**	FISSO
QUATTRO (85)					
2.1 Turbo	8,5x69x27,5/35,5	80-87	074109243	**C797**	
2.2 Turbo	8,5x69x27,5/35,5	87-89	074109243	**C797**	
QUATTRO					
2.2-2.3	8,2x74,5x27/35	80->	069109243B	**C729**	FISSO
SPORT QUATTRO					
2.1	8,2x74,5x27/35	84->	069109243B	**C729**	FISSO
V8					
2.8	72x27/31,5	94->	078109243C	**C727**	MOBILE
2.8		94->	078109244G	**C728**	FISSO

TENDICINGHIA DISTRIBUZIONE
BELT TIGHTENERS
TENDEURS DE COURROIE

BMW

MODELLO	DIMENSIONI	ANNO	RIF ORIGINALE	RIF CORAM	NOTE
320i					
E36 (M52) Pompa acqua+Condiz.	17x70x26	94->	11281427252	**C741**	MOBILE
328i					
E36 (M52) Pompa acqua+Condiz.	17x70x26	94->	11281427252	**C741**	MOBILE
528i					
E39 (M52) Pompa acqua+Condiz.	17x70x26	94->	11281427252	**C741**	MOBILE
728i					
E39 (M52) Pompa acqua+Condiz.	17x70x26	95->	11281427252	**C741**	MOBILE
Z 3					
2.8-3.2 (M52) Pompa acqua+Condiz.	17x70x26	96->	11281427252	**C741**	MOBILE
316 i					
E30 E36	8,3x32x23/25 8,3x32x23/25	87-91 90-93	11311708806 11311708806	**C813** **C813**	
318 i					
E30 E36	8,3x32x23/25 8,3x32x23/25	87-91 90-93	11311708806 11311708806	**C813** **C813**	
CABRIOLET 318 i					
E30	8,3x32x23/25	90-93	11311708806	**C813**	
TOURING 316 i					
E30	8,3x32x23/25	91-94	11311708806	**C813**	
TOURING 318 i					
E30	8,3x32x23/25	87-94	11311708806	**C813**	
518 i					
E34	8,3x32x23/25	89-95	11311708806	**C813**	
TOURING 518 i					
E34	8,3x32x23/25	93-94	11311708806	**C813**	

TENDICINGHIA DISTRIBUZIONE
BELT TIGHTENERS
TENDEURS DE COURROIE

follows CITROËN

MODELLO	DIMENSIONI	ANNO	RIF ORIGINALE	RIF CORAM	NOTE
AMI 8					
1.0 Super	30x57x24	73-77	95619217	**C525**	FISSO dx e sx
AX					
1.0-1.1-1.3-1.4	13x59x22/33	86->	97535002	**C604**	MOBILE
AX (ZA-_)					
1.3 Sport	65x26,5/59	87-88	6453.S4	**C796**	
1.4 Gti	65x26,5/59	91-96	6453.S4	**C796**	
AX					
1.4-1.5 Diesel	10x60x34/42	92->	0830.14	**C737**	FISSO
10	65x26,5/59	86-98	6453.S4	**C796**	
10 E	65x26,5/59	86-88	6453.S4	**C796**	
11	65x26,5/59	86-97	6453.S4	**C796**	
11 Cat.	65x26,5/59	88-89	6453.S4	**C796**	
11 4x4	65x26,5/59	91-92	6453.S4	**C796**	
14	65x26,5/59	86-97	6453.S4	**C796**	
14 4x4	65x26,5/59	91-96	6453.S4	**C796**	
AXEL					
1.1 R-1.2 TRS-1.3	30x57x24	84-90	95619217	**C525**	FISSO dx e sx
BERLINGO					
1.1i-1.4i	13x59x22/33	96->	97535002	**C604**	MOBILE
1.1 i (MFHDZ)	60x25	96->	0829.90	**C793**	
1.1 i (MFHDZ)	65x26,5/59	96->	6453.S4	**C796**	
1.4 i (MFKFX)	60x25	96->	0829.90	**C793**	
1.4 i (MFKFX)	65x26,5/59	96->	6453.S4	**C796**	
1.4 bivalent	60x25	02->	0829.90	**C793**	
1.4 i bivalent	60x25	03->	0829.90	**C793**	
1.8-1.9 Diesel	60x34	96->	0829.33	**C545**	MOBILE
1.8-1.9 Diesel	60x34	96->	0830.13	**C546**	FISSO
1.8i	59x22/32,6	96->	96052662	**C738**	MOBILE
1.8 DS/Diesel/Furgonato	17x60x25,5	96->	7700102931	**C752**	PULEGGIA
1.8 i / Diesel/ 1.9 Diesel	85x26/35,5	96->	575115	**C769**	
1.8i	17x60x25,5	97->	7700102931	**C752**	PULEGGIA
1.8i / Diesel / Furgonato	90x24,7/32,5	97->	575118	**C768**	

TENDICINGHIA DISTRIBUZIONE
BELT TIGHTENERS
TENDEURS DE COURROIE

follows CITROËN

MODELLO	DIMENSIONI	ANNO	RIF ORIGINALE	RIF CORAM	NOTE
BERLINGO					
1.8 i (MFLFX)	10x70x27/29	97->	5751.29	**C794**	
1.8 i 4WD (MFLFX)	10x70x27/29	97->	5751.29	**C794**	
1.8 D (MFA9A)	10x70x27/29	98->	5751.29	**C794**	
1.9 DS/Diesel/Furgonato	17x60x25,5	96->	7700102931	**C752**	PULEGGIA
1.9 Diesel	90x24,7/32,5	96->	9608859180	**C768**	
1.9 D (MFDJY)	10x70x27/29	96->	5751.29	**C794**	
1.9 D (MFWJZ)	10x70x27/29	98->	5751.29	**C794**	
1.9 Diesel-2.0 Turbo Diesel Hdi	13x60x34/42	98->	0829.62	**C742**	MOBILE
1.9 Diesel-2.0 Turbo Diesel Hdi	10x60x34/42	98->	0830.31	**C743**	FISSO
1.9 D 4WD (MFWJZ)	10x70x27/29	98->	5751.29	**C794**	
2.0 HDI 90 (MFRHY)	10x70x27/29	99->	5751.29	**C794**	
BERLINGO Furgonato					
1.1 i	60x25	96->	0829.90	**C793**	
1.1 i (MAHDZ,MBHDZ)	65x26,5/59	96->	6453.s4	**C796**	
1.4 bivalent	60x25	02->	0829.90	**C793**	
1.4 i (MBKFX)	60x25	96->	0829.90	**C793**	
1.4 i (MBKFX)	65x26,5/59	96->	6453.S4	**C796**	
1.4 i bivalent	60x25	03->	0829.90	**C793**	
1.8 D (MBA9A, MCA9A)	10x70x27/29	96->	5751.29	**C794**	
1.9 D	10x70x27/29	96->	5751.29	**C794**	
1.9 D (MBWJZ, MCWJZ)	10x70x27/29	99->	5751.29	**C794**	
1.9 D 4WD	10x70x27/29	98->	5751.29	**C794**	
2.0 HDI 90 (MBRHY, MCRHY)	10x70x27/29	99->	5751.29	**C794**	
BX					
1.1-1.4	13x59x22/33	87->	97535002	**C604**	MOBILE
1.6-1.9	57x24	87-91	91508298	**C603**	MOBILE
1.6-1.9	59x22/32,6	91-93	96052662	**C738**	MOBILE
1.8-1.9 Diesel-Turbo Diesel	60x34	83-93	0829.11	**C600**	MOBILE
1.8-1.9 Diesel-Turbo Diesel	60x34	83-93	0830.02	**C601**	FISSO
19 Diesel / BREAK 19 Diesel	85x26/35,5	87-94	575115	**C769**	
C2					
1.1	60x25	03->	0829.90	**C793**	
1.4	60x25	03->	0829.90	**C793**	
C3					
1.1 i	60x25	02->	0829.90	**C793**	
1.4 i Bivalent	60x25	02->	0829.90	**C793**	
1.4 Pluriel	60x25	03->	0829.90	**C793**	

TENDICINGHIA DISTRIBUZIONE
BELT TIGHTENERS
TENDEURS DE COURROIE

follows CITROËN

MODELLO	DIMENSIONI	ANNO	RIF ORIGINALE	RIF CORAM	NOTE
C5					
2.0 Hdi (DCRHYB)	10x70x27/29	01->	5751.29		
2.0 Hdi (DCRHZB, DCRHZE)	10x70x27/29	01->	5751.29	**C794**	
C5 BREAK					
2.0 HDI (DERHYB)	10x70x27/29	01->	5751.29	**C794**	
2.0 HDI (DERHZB, DERHZE)	10x70x27/29	01->	5751.29	**C794**	
C8					
2.0 HDI	10x70x27/29	02->	5751.29	**C794**	
C15					
1.0-1.1-1.4	13x59x22/33	84->96	97535002	**C604**	MOBILE
1.8 Diesel	60x34	84-93	0829.11	**C600**	MOBILE
1.8 Diesel	60x34	84-93	0830.02	**C601**	FISSO
1.8 Diesel	60x34	94->	0829.33	**C545**	MOBILE
1.8 Diesel	60x34	94->	0830.13	**C546**	FISSO
C25					
1.9 Diesel	60x34	87->	0829.11	**C600**	MOBILE
1.9 Diesel	60x34	87->	0830.02	**C601**	FISSO
2.5 Diesel-Turbo Diesel	38x67,5x35,5	83->	0818.17	**C535**	MOBILE
2.5 Diesel-Turbo Diesel	30x57x24	83->	95619217	**C525**	P.INIEZ.
2.5 SOFIM	35x67x34	81->	5001001259	**C512**	SUPERIORE
2.5 SOFIM	35x63,7x34	81->	5001001272	**C513**	INFERIORE
CX					
Diesel -Turbo Diesel	30x57x24	84->	95619217	**C525**	FISSO dx e sx
2.0	60x34	75-83	0829.10	**C602**	MOBILE
2.2	60x34	83->	0829.10	**C602**	MOBILE
2.5 Diesel -Turbo Diesel	38x67,5x35,5	83-90	0818.17	**C535**	MOBILE
2.5 Diesel -Turbo Diesel	30x57x24	83-90	95619217	**C525**	P.INIEZ.
GS-GSA					
1.0-1.1-1.2-1.3	30x57x24	71-86	95619217	**C525**	FISSO dx e sx

TENDICINGHIA DISTRIBUZIONE
BELT TIGHTENERS
TENDEURS DE COURROIE

follows CITROËN

MODELLO	DIMENSIONI	ANNO	RIF ORIGINALE	RIF CORAM	NOTE
EVASION					
1.8	90x25	97-02	575120	**C785**	
1.8	90x24,7/32,5	97-02	575118	**C768**	
1.8i	59x22/32,6	94->	96052662	**C738**	MOBILE
1.9 Turbo D	60x34	94->	0829.33	**C545**	MOBILE
1.9 Turbo D	60x34	94->	0830.13	**C546**	FISSO
1.9 TD	85x26/35,5	94-02	575115	**C769**	
1.9 TD	10x70x27/29	94-02	5751.29	**C794**	
1.9 Turbo Diesel	85x26/35,5	94-02	575115	**C769**	
1.9 Diesel -2.0 Turbo Diesel Hdi	13x60x34/42	98->	0829.62	**C742**	MOBILE
1.9 Diesel -2.0 Turbo Diesel Hdi	10x60x34/42	98->	0830.31	**C743**	FISSO
2.0/Turbo CT	90x24,7/32,5	94-02	575118	**C768**	
2.0 / Turbo CT	90x25	94-02	575120	**C785**	
2.0 16 V	13x57x33/41	98-00	82932	**C781**	
2.0 HDI	10x70x27/29	99-02	5751.29	**C794**	
2.1 TD	10x70x27/29	96-02	5751.29	**C794**	
2.1 TD	85x26/35,5	96-02	575115	**C769**	
2.1 Turbo DS	17x60x25,5	96-02	7700102931	**C752**	
JUMPER					
1.9 Diesel -2.0 Turbo Diesel Hdi	13x60x34/42	99->	0829.62	**C742**	MOBILE
1.9 Diesel -2.0 Turbo Diesel Hdi	10x60x34/42	99->	0830.31	**C743**	FISSO
1.9 D Furgonato	85x26/35,5	99-02	575115	**C769**	
1.9 Diesel	85x26/35,5	99-02	575115	**C769**	
1.9 TD	85x26/35,5	94-02	575115	**C769**	
1.9 TD 4x4	85x26/35,5	96-02	575115	**C769**	
1.9 TD Furgonato/ Pianale piatto Autotelaio	85x26/35,5	94-02	575115	**C769**	
1.9-2.0 Diesel-Turbo Diesel	60x34	94->	0829.33	**C545**	MOBILE
1.9-2.0 Diesel-Turbo Diesel	60x34	94->	0830.13	**C546**	FISSO
2.0 / Furgonato/Pianale piatto Autotelaio	13x57x33/41	94-02	82932	**C781**	
2.0 4x4	13x57x33/41	96-02	82932	**C781**	
2.0 Hdi Autobus/Furgonato	17x60x25,5	02->	7700102931	**C752**	PULEGGIA
2.0 Hdi Pianale Piatto/Autotelaio	17x60x25,5	02->	7700102931	**C752**	PULEGGIA
2.0 Autobus/Furgonato/4x4	90x24,7/32,5	94-02	555118	**C768**	
2.5 Diesel/Turbo Diesel/Pianale piatto Autotelaio	70,5x32/40,5	94-02	81820	**C779**	
2.5 Diesel 4x4/Pianale piatto Autotelaio	70,5x32/40,5	96-02	81820	**C779**	
2.5 Diesel/Turbo Diesel/Pianale piatto Autotelaio	10x70,5x32/37	94-02	83012	**C780**	
2.5 Diesel 4x4/Pianale piatto Autotelaio	10x70,5x32/37	96-02	83012	**C780**	
JUMPY					
1.6	30x57x24	96->	95619217	**C525**	FISSO
1.9 D Furgonato	17x60x25,5	95->	7700102931	**C752**	PULEGGIA
1.9 DS	17x60x25,5	95->	7700102931	**C752**	PULEGGIA
1.9 Turbo DS /Diesel	17x60x25,5	95->	7700102931	**C752**	PULEGGIA
1.9 Diesel / TD	85x26/35,5	95-98	575115	**C769**	
1.9 D	10x70x27/29	95->	5751.29	**C794**	
1.9 TD	10x70x27/29	95->	5751.29	**C794**	
1.9 Diesel-Turbo Diesel	60x34	96->	0829.33	**C545**	MOBILE
1.9 Diesel-Turbo Diesel	60x34	96->	0830.13	**C546**	FISSO
2.0 HDi	10x70x27/29	99->	5751.29	**C794**	
2.0 Turbo Diesel Hdi	13x60x34/42	99->	0829.62	**C742**	MOBILE

follows CITROËN

MODELLO	DIMENSIONI	ANNO	RIF ORIGINALE	RIF CORAM	NOTE
JUMPY Furgonato					
1.9 D	10x70x27/29	98->	5751.29	**C794**	
1.9 TD	10x70x27/29	95->	5751.29	**C794**	
2.0 HDi	10x70x27/29	99->	5751.29	**C794**	
JUMPY Pianale piatto					
1.9 TD	10x70x27/29	99->	5751.29	**C794**	
2.0 HDi	10x70x27/29	99->	5751.29	**C794**	
SAXO					
1.0 i	13x59x22/33	95->	97535002	**C604**	MOBILE
SAXO (S0,S1)					
1.0 X	65x26,5/59	96->	6453.S4	**C796**	
SAXO					
1.1 X, SX	60x25	96->	0829.90	**C793**	
SAXO (S0,S1)					
1.1 X, SX	65x26,5/59	96->	6453.S4	**C796**	
SAXO					
1.1i-1.3-1.4i-1.4iXSi-1.6i	13x59x22/33	95->	97535002	**C604**	MOBILE
1.4 VTS	60x25	96->	0829.90	**C793**	
SAXO (S0,S1)					
1.4 VTS	65x26,5/59	96->	6453.S4	**C796**	
SAXO					
1.4-1.5 Diesel	10x60x34/42	95->	0830.14	**C737**	FISSO
SAXO (S0,S1)					
1.6 VTL, VTR , VTS	65x26,5/59	96->	6453.S4	**C796**	

TENDICINGHIA DISTRIBUZIONE
BELT TIGHTENERS
TENDEURS DE COURROIE

follows CITROËN

MODELLO	DIMENSIONI	ANNO	RIF ORIGINALE	RIF CORAM	NOTE
VISA					
1.6 GTI	57x24	84-88	91508298	**C603**	MOBILE
1.8 Diesel	60x34	82-94	0829.11	**C600**	MOBILE
1.8 Diesel	60x34	82-94	0830.02	**C601**	FISSO
XANTIA					
1.6i-1.8i-2.0	59x22/32,6	93->	96052662	**C738**	MOBILE
1.6i /1.8i / 2.0 i 16 v	90x24,7/32,5	93-98	575118	**C768**	
1.6 i / 1.8 i / 2.0 i	90x25	93-98	575120	**C785**	
1.8i 16v-2.0i 16v	10x60x34/42	93->	0830.14	**C737**	FISSO
1.8 i 16V	90x24,7/32,5	95-98	575118	**C768**	
1.8 i 16V/ 2.0 i 16 V	13x57x33/41	95-98	82932	**C781**	
1.8 i 16v	90x25	95-98	575120	**C785**	
1.9 Diesel-Turbo Diesel	60x34	94->	0829.33	**C545**	MOBILE
1.9 Diesel-Turbo Diesel	60x34	94->	0830.13	**C546**	FISSO
1.9 Diesel-Turbo Diesel	60x34	81-94	0829.11	**C600**	MOBILE
1.9 Diesel-Turbo Diesel	60x34	81-94	0830.02	**C601**	FISSO
1.9 DS/Diesel/SD/Turbo Diesel	17x60x25,5	94-98	7700102931	**C752**	PULEGGIA
1.9 Turbo DS	17x60x25,5	94->	7700102931	**C752**	PULEGGIA
1.9 Diesel	85x26/35,5	94-98	575115	**C769**	
1.9 SD	85x26/35,5	96-98	575115	**C769**	
1.9 TD	85x26/35,5	94-98	575115	**C769**	
2.0 Turbo Diesel Hdi-2.2	13x60x34/42	98->	0829.62	**C742**	MOBILE
2.0 Turbo Diesel Hdi-2.2	10x60x34/42	98->	0830.31	**C743**	FISSO
2.0 i 16v	90x25	94-98	575120	**C785**	
2.0 Turbo	90x25	95-98	575120	**C785**	
2.1 Turbo DS	17x60x25,5	95-99	7700102931	**C752**	PULEGGIA
XANTIA (X1)					
1.9 D	10x70x27/29	94-98	5751.29	**C794**	
1.9 SD	10x70x27/29	96-98	5751.29	**C794**	
1.9 Turbo D	10x70x27/29	94-98	5751.29	**C794**	
2.1 Turbo D 12V	10x70x27/29	95-98	5751.29	**C794**	
XANTIA (X2)					
1.9 SD	10x70x27/29	98->	5751.29	**C794**	
1.9 Turbo D	10x70x27/29	98->	5751.29	**C794**	
2.0 HDI 109 - 2.0 HDI 90	10x70x27/29	99->	5751.29	**C794**	
2.1 Turbo D 12V	10x70x27/29	98-99	5751.29	**C794**	
XANTIA BREAK					
1.8 i 16 V/2.0 i 16V	13x57x33/41	95-98	82932	**C781**	
1.8 i /1.8i 16V/2.0 i /2.0 i 16v/ 2.0 Turbo	90x25	95-98	575120	**C785**	
1.8 i /1.8i 16V/2.0 i	90x24,7/32,5	95-98	575118	**C768**	
1.9 SD/Turbo diesel	17x60x25,5	95-98	7700102931	**C752**	PULEGGIA
1.9 Turbo Diesel	85x26/35,5	95-98	575115	**C769**	
1.9 SD	85x26/35,5	97-98	575115	**C769**	
2.1 Turbo diesel 12V	85x26/35,5	96-98	575115	**C769**	
2.1 Turbo diesel 12V	17x60x25,5	96-99	7700102931	**C752**	PULEGGIA

TENDICINGHIA DISTRIBUZIONE
BELT TIGHTENERS
TENDEURS DE COURROIE

follows CITROËN

MODELLO	DIMENSIONI	ANNO	RIF ORIGINALE	RIF CORAM	NOTE
XANTIA BREAK (X1)					
1.9 Turbo D	10x70x27/29	95-98	5751.29	**C794**	
1.9 SD	10x70x27/29	97-98	5751.29	**C794**	
2.1 Turbo D 12V	10x70x27/29	96-98	5751.29	**C794**	
XANTIA BREAK (X2)					
1.9 SD - 1.9 Turbo D	10x70x27/29	98->	5751.29	**C794**	
2.0 HDI 109 - 2.0 HDI 90	10x70x27/29	99->	5751.29	**C794**	
2.1 Turbo D 12V	10x70x27/29	98-99	5751.29	**C794**	
XM					
2.0 i 16V	13x57x33/41	94-00	82932	**C781**	
2.0 i 16V	90x25	94-00	575120	**C785**	
2.0i 16v	10x60x34/42	94->	0830.14	**C737**	FISSO
2.0 Turbo	59x22/32,6	89->	96052662	**C738**	MOBILE
2.1 D 12V (Y3)	10x70x27/29	89-94	5751.29	**C794**	
2.1 12V DS	17x60x25,5	89-94	7700102931	**C752**	PULEGGIA
2.1 TD 12V (Y3)	10x70x27/29	89-94	5751.29	**C794**	
2.1 TD 12V (Y4)	10x70x27/29	94-00	5751.29	**C794**	
2.1 12V Turbo DS	17x60x25,5	89-00	7700102931	**C752**	PULEGGIA
2.1 12V Turbo Diesel	85x26/35,5	94-00	575115	**C769**	
2.5 Turbo Diesel	70,5x32/40,5	94-00	81820	**C779**	
2.5 Turbo Diesel	10x70,5x32/37	94-00	83012	**C780**	
XM BREAK					
2.0 i 16V	13x57x33/41	94-00	82932	**C781**	
2.0i 16v	90x24,7/32,5	91-00	575118	**C768**	
2.1 D/ TD 12V	17x60x25,5	89-00	7700102931	**C752**	PULEGGIA
2.1 TD 12V	85x26/35,5	94-00	575115	**C769**	
2.1 D 12V (Y3)	10x70x27/29	91-94	5751.29	**C794**	
2.1 TD 12V (Y3)	10x70x27/29	91-94	5751.29	**C794**	
2.1 D12 (Y4)	10x70x27/29	94-96	5751.29	**C794**	
2.1 TD 12V (Y4)	10x70x27/29	94-00	5751.29	**C794**	
2.5 Turbo Diesel	70,5x32/40,5	94-00	81820	**C779**	
2.5 Turbo Diesel	10x70,5x32/37	94-00	83012	**C780**	
XSARA					
1.4 i	60x25	97->	0829.90	**C793**	
XSARA (N1)					
1.4 i	65x26,5/59	97->	6453.S4	**C796**	

TENDICINGHIA DISTRIBUZIONE
BELT TIGHTENERS
TENDEURS DE COURROIE

follows CITROËN

MODELLO	DIMENSIONI	ANNO	RIF ORIGINALE	RIF CORAM	NOTE
XSARA					
1.4 i	13x59x22/33	97->	97535002	**C604**	MOBILE
XSARA (N1)					
1.6 i	65x26,5/59	97-00	6453.S4	**C796**	
XSARA					
1.8i 16v-2.0i 16v	10x60x34/42	97->	0830.14	**C737**	FISSO
1.8 D	10x70x27/29	97-00	5751.29	**C794**	
1.8i	59x22/32,6	97->	96052662	**C738**	MOBILE
1.8i/1.8i 16v	90x24,7/32,5	94-00	575118	**C768**	
1.8 Diesel/1.9 Diesel / TD	85x26/35,5	97-00	575115	**C769**	
1.8 i 16 V / 2.0 16V	13x57x33/41	97-00	82932	**C781**	
1.8 i	90x25	97-00	575120	**C785**	
1.9 Diesel -2.0 Turbo Diesel Hdi	13x60x34/42	98->	0829.62	**C742**	MOBILE
1.9 Diesel -2.0 Turbo Diesel Hdi	10x60x34/42	98->	0830.31	**C743**	FISSO
1.9 D	10x70x27/29	97->	5751.29	**C794**	
1.9 SD	10x70x27/29	98-00	5751.29	**C794**	
1.9 TD	10x70x27/29	97-00	5751.29	**C794**	
1.8 DS	17x60x25,5	97-00	7700102931	**C752**	PULEGGIA
1.9 DS/ Diesel	17x60x25,5	96->	7700102931	**C752**	PULEGGIA
1.9 Turbo DS	17x60x25,5	97-00	7700102931	**C752**	PULEGGIA
1.9 SD	85x26/35,5	98-00	575115	**C769**	
2.0 HDi 109	10x70x27/29	01->	5751.29	**C794**	
2.0 HDi 90	10x70x27/29	99->	5751.29	**C794**	
XSARA BREAK					
1.4 i	60x25	97->	0829.90	**C793**	
1.6 i	65x26,5/59	97-00	6453.S4	**C796**	
1.8i/1.8i 16v	90x24,7/32,5	97-00	575118	**C768**	
1.8 Diesel /1.9 Diesel /TD	85x26/35,5	97-00	575115	**C769**	
1.8 i 16V/ 2.0 16V	13x57x33/41	97-00	82932	**C781**	
1.8 i	90x25	97-00	575120	**C785**	
1.8 D	10x70x27/29	97-00	5751.29	**C794**	
1.9 D/TD	17x60x25,5	97-00	7700102931	**C752**	PULEGGIA
1.9 D	10x70x27/29	97-00	5751.29	**C794**	
1.9 TD	10x70x27/29	97-00	5751.29	**C794**	
2.0 HDi 109	10x70x27/29	01->	5751.29	**C794**	
2.0 HDi 90	10x70x27/29	99->	5751.29	**C794**	
XSARA COUPE					
1.4 i	60x25	98->	0829.90	**C793**	
1.6 i	65x26,5/59	98-00	6453.S4	**C796**	
1.8 i	90x25	97-00	575120	**C785**	
1.8 i 16V/2.0 i 16 V	13x57x33/41	98-00	82932	**C781**	
1.9 D/TD	17x60x25,5	98-00	7700102931	**C752**	PULEGGIA
1.9 TD	85x26/35,5	98-00	575115	**C769**	
1.9 D	10x70x27/29	99->	5751.29	**C794**	
1.9 TD	10x70x27/29	98-00	5751.29	**C794**	
2.0 HDI 90	10x70x27/29	99->	5751.29	**C794**	
2.0 HDI 109	10x70x27/29	01->	5751.29	**C794**	

TENDICINGHIA DISTRIBUZIONE
BELT TIGHTENERS
TENDEURS DE COURROIE

follows CITROËN

MODELLO	DIMENSIONI	ANNO	RIF ORIGINALE	RIF CORAM	NOTE
XSARA PICASSO					
1.8 16v	90x24,7/32,5	00->	575118	**C768**	
1.8 16v	13x57x33/41	00->	82932	**C781**	
2.0 HDi	10x70x27/29	00->	5751.29	**C794**	
ZX					
1.1-1.4	13x59x22/33	91->	97535002	**C604**	MOBILE
1.1 - 1.4 - 1.4 i	65x26,5/59	91-97	6453.S4	**C796**	
1.6 i - 1.8 i	90x25	91-97	575120	**C785**	
1.6-1.9	57x24	91->	91508298	**C603**	PULEGGIA
1.6 i - 1.9 i	90x24,7/32,5	91-97	575118	**C768**	MOBILE
1.6 - 1.8 - 1.9 - 2.0	59x22/32,6	91-97	96052662	**C738**	MOBILE
1.8 D	10x70x27/29	93-97	5157.29	**C794**	
1.8 Diesel	85x26/35,5	93-97	575115	**C769**	
1.8 Diesel	17x60x25,5	93-97	7700102931	**C752**	PULEGGIA
1.8 DS	17x60x25,5	94-97	7700102931	**C752**	MOBILE
1.8 i 16V - 2.0 i 16v	13x57x33/41	96-97	82932	**C781**	
1.8-1.9 Diesel-Turbo Diesel	60x34	94->	0829.33	**C545**	PULEGGIA
1.8-1.9 Diesel-Turbo Diesel	60x34	94->	0830.13	**C546**	PULEGGIA
1.8-1.9 Diesel-Turbo Diesel	60x34	92->	0829.11	**C600**	FISSO
1.8-1.9 Diesel-Turbo Diesel	60x34	92->	0830.02	**C601**	FISSO
1.8i 16v-2.0 16v	10x60x34/42	93-97	0830.14	**C737**	PULEGGIA
1.8 i - 2.0i	90x24,7/32,5	92-97	575118	**C768**	FISSO
1.8 i 16V - 2.0 i 16v	90x24,7/32,5	96-97	575118	**C768**	MOBILE
1.9 DS	17x60x25,5	91-97	7700102931	**C752**	PULEGGIA
1.9 Turbo DS	17x60x25,5	92-97	7700102931	**C752**	
1.9 D	10x70x27/29	91-97	5751.29	**C794**	
1.9 TD	10x70x27/29	92-97	5751.29	**C794**	
1.9 Diesel	85x26/35,5	91-97	575115	**C769**	
1.9 TD	85x26/35,5	92-97	575115	**C769**	
2.0 i 16v	90x24,7/32,5	92-97	575118	**C768**	
2.0 i - 16v	90x25	92-97	575120	**C785**	
ZX BREAK					
1.4 i	65x26,5/59	93-97	6453.S4	**C796**	
1.6 i / 1.8 i	90x25	93-97	575120	**C785**	
1.6i / 1.8i	90x24,7/32,5	93-97	575118	**C768**	
1.8 D	10x70x27/29	93-97	5751.29	**C794**	
1.8 D	17x60x25,5	93-97	7700102931	**C752**	
1.8 D	85x26/35,5	92-97	575115	**C769**	
1.8 i 16v	13x57x33/41	96-98	82932	**C781**	
1.9 D	10x70x27/29	93-97	5751.29	**C794**	
1.9 D/TD	17x60x25,5	93-97	7700102931	**C752**	
1.9 D/TD	85x26/35,5	93-97	575115	**C769**	
1.9 TD	10x70x27/29	93-97	5751.29	**C794**	

TENDICINGHIA DISTRIBUZIONE
BELT TIGHTENERS
TENDEURS DE COURROIE

DACIA

MODELLO	DIMENSIONI	ANNO	RIF ORIGINALE	RIF CORAM	NOTE
LOGAN					
1.4	10,3x55x22	04->	7700273277	**C816**	
1.4	17x60x25,5	04->	7700102931	**C752**	
1.6	10,3x55x22	04->	7700273277	**C816**	
1.6	17x60x25,5	04->	7700102931	**C752**	

DAEWOO

CIELO					
1.5 16v	8x59x19	94->	90499401	**C746**	MOBILE
ESPERO					
1.5 - 1.6	8x59x19	91-94	90499401	**C746**	MOBILE
1.5 16 V	64x29	93-99	96103222	**C766**	
EVANDA					
2.0 16V	59x26/33,5	02->	5636738	**C775**	
2.0 16V	8x52/58x29,5	02->	90530126	**C776**	
KALOS					
1.4	64x29	02-03	96103222	**C766**	
LANCETTI					
1.4	64x29	04->	96103222	**C766**	
1.6	64x29	04->	96103222	**C766**	
1.8	59x26/33,5	04->	5636738	**C775**	
1.8	8x52/58x29,5	04->	90530126	**C776**	
LANOS					
1.4-1.5	8x59x19	97->	90499401	**C746**	MOBILE
1.5 16 V	64x29	97->	96103222	**C766**	

TENDICINGHIA DISTRIBUZIONE
BELT TIGHTENERS
TENDEURS DE COURROIE

follows DAEWOO

MODELLO	DIMENSIONI	ANNO	RIF ORIGINALE	RIF CORAM	NOTE
LEMANS					
1.5	8x59x19	92-93	90499401	**C746**	MOBILE
LEGANZA					
2.0 16V	59x26/33,5	97-02	5636738	**C775**	
2.0 16V	8x52/58x29,5	97-02	90530126	**C776**	
MATIZ (KLYA)					
0.8	42x28/34,5	98->	94580139	**C808**	
1.0	42x28/34,5	03->	94580139	**C808**	
NEXIA					
1.5	8x59x19	95->	90499401	**C746**	MOBILE
1.5 16 V/ Tre volumi KLETN	64x29	95-97	96103222	**C766**	
NUBIRA					
1.6 16V /Tre volumi/Wagon	64x29	97->	96103222	**C766**	
2.0 16V/Tre volumi/ Wagon	59x26/33,5	97->	5636738	**C775**	
2.0 16V/Tre volumi/ Wagon	8x52/58x29,5	97->	90530126	**C776**	
TACUMA					
2.0	59x26/33,5	00->	5636738	**C775**	
2.0	8x52/58x29,5	00->	90530126	**C776**	
TICO (KLY3)					
0.8	42x28/34,5	95-00	94580139	**C808**	

TENDICINGHIA DISTRIBUZIONE
BELT TIGHTENERS
TENDEURS DE COURROIE

FIAT

MODELLO	DIMENSIONI	ANNO	RIF ORIGINALE	RIF CORAM	NOTE
124					
SPORT-COUPE'	25x70,5x24		4178014	**C510**	
SPECIALE T	25x70,5x24		4178014	**C510**	
127					
1.050-1.3-Rustica	62.5x25	77->	4427068	**C505**	MOBILE
1.3 Diesel	65x31	81-88	4438894	**C506**	MOBILE
1.3 Diesel	57/65x26	81-88	5952181	**C507**	FISSO
128					
I serie	25x60x23		4277048	**C508**	
1.3	25x60x27	71-75	4320893	**C509**	FISSO
0.04375	25x60x29	76-84	4385583	**C516**	FISSO
131					
S I serie	25x67x24		4178016	**C511**	
1.3-1.4-1.6 Super	25x67x28	78-83	4443703	**C515**	FISSO
1.6-1.8-2.0	25x70,5x28	78-84	4443446	**C514**	FISSO
132					
1.6	25x70,5x24		4178014	**C510**	
1.6-1.8	25x67x28	74-81	4443703	**C515**	FISSO
2.0	25x70,5x28	77-81	4443446	**C514**	FISSO
ARGENTA					
1.6	25x67x28	81-83	4443703	**C515**	FISSO
2.0-2.0 i.e	25x70,5x28	81-85	4443446	**C514**	FISSO
BARCHETTA					
1.8 16v	8,5x57x29/35	95->	6064403	**C739**	FISSO
1.8 16v	17x65,3x29	95->	46406204	**C754**	MOBILE
1.8 16v	8,1x65x29	95->	60596372	**C778**	
BRAVO/BRAVA					
1.9 Diesel-Turbo Diesel	10,5x61x33/57,5	95->	7596877	**C528**	MOBILE
1.9 Diesel-Turbo Diesel	10,5x61x33/57,5	95->	7596876	**C529**	FISSO
1.6 16v (Comandi vari+Condizionatore)	20x80x23	94-98	7797142	**C539**	FISSO
1.9 Diesel Turbo Diesel Cond.	20x80x27	95->	7733200	**C544**	FISSO

TENDICINGHIA DISTRIBUZIONE
BELT TIGHTENERS
TENDEURS DE COURROIE

follows FIAT

MODELLO	DIMENSIONI	ANNO	RIF ORIGINALE	RIF CORAM	NOTE
BRAVO/BRAVA					
1.6 16v	60x29	94->	46416489	**C732**	FISSO
1.6 16v	12,3x65x30,5/35,5	94->	46554826	**C733**	MOBILE
1.8 16v	8,5x57x29/35	94-98	6064403	**C739**	FISSO
1.8 GT	8,5x57x29/35	95-01	6064403	**C739**	FISSO
1.8 GT 16V	8,5x57x29/35	95-01	6064403	**C739**	FISSO
1.9 Turbo Diesel - 2.0 20V /JTD	10,2x53x29/31,5	95->	7763644	**C740**	FISSO
2.0 HGT 20V	10,2x53x29/31,5	95->	7763644	**C740**	FISSO
1,9 Turbo DS	10,5x80x25/30	96-01	46454419	**C753**	FISSO
1.4 12V	17x65,3x29	95-01	46406204	**C754**	MOBILE
1.8 16V	17x65,3x29	95-01	46406204	**C754**	MOBILE
1.9 JTD	17x65,3x29	98-01	46406204	**C754**	MOBILE
1.9 Turbo DS	17x65,3x29	96-01	46406204	**C754**	MOBILE
2.0 20 V	10,3x80x28,5/30	95->	46440604	**C763**	FISSO
1.9 JTD	8,2x64,778x30/41	98-01	7778565	**C767**	
1.9 Turbo DS / TD	8,2x64,778x30/41	96-01	7778565	**C767**	
1.4 / 12V	64,5x28,7	95-01	7782192	**C782**	
CINQUECENTO					
1.1	30x57x24	93->	95619217	**C525**	MOBILE
CROMA					
1.6	10,5x56x27/39,5	85-91	5997325	**C522**	MOBILE
2.0i.e Turbo 16v	10,5x56x27/39,5	91-96	5997325	**C522**	MOBILE
2.0 i.e-2.0i.e Turbo	10,5x60x25/48	85-92	5956109	**C523**	MOBILE
2.0 Turbo-2.0 16v	10,5x60x25/46,5	92->	7541718	**C532**	MOBILE
2.5 Turbo Diesel	13,5x60/70x28	85-88	7302681	**C524**	FISSO
1.9 Diesel - Turbo Diesel (Condizionatore)	20x78x27,5	88-96	7554724	**C538**	MOBILE
COUPE'					
2.0 Turbo - 2.0 16v	10,5x56x27x39,5	94->	5997325	**C522**	FISSO
1.8 16 v	8,5x57x29/35	95->	6064403	**C739**	MOBILE
2.0 20v	10,2x53x29/31,5	95->	7763644	**C740**	MOBILE
1.8 16V	17x65,3x29	96->	46406204	**C754**	MOBILE
2.0 20 V 5 Cil.	10,3x80x28,5/30	95->	7789752	**C763**	FISSO
1.8 16V	8,1x65x29	96->	60596372	**C778**	
DOBLO					
1.9 D /CARGO	8,2x64,778x30/41	01->	7778565	**C767**	
1.9 JTD/CARGO	8,2x64,778x30/41	01->	7778565	**C767**	
1.9 D / JTD/CARGO	10,2x53x29/31,5	01-03	7763644	**C740**	FISSO

TENDICINGHIA DISTRIBUZIONE
BELT TIGHTENERS
TENDEURS DE COURROIE

follows FIAT

MODELLO	DIMENSIONI	ANNO	RIF ORIGINALE	RIF CORAM	NOTE
DUCATO					
2.0 / Furgonato	90x24,7/32,5	94-02	9608859180	**C768**	
2.0 / Pianale piatto	90x24,7/32,5	98-02	9608859180	**C768**	
1.9 D / TD / Furgonato /Autotelaio	85x26/35,5	98-00	9607451480	**C769**	
DUCATO/TALENTO					
2.5 SOFIM Diesel-Turbo Diesel	25x67x34	90->	4740846	**C512**	INFERIORE
2.5 SOFIM Diesel	25x63,7x34	90->	4740847	**C513**	SUPERIORE
2.5 CRD Diesel-Turbo Diesel	30x57x24	86->	5972277	**C525**	INFERIORE
1.9 Diesel - Turbo Diesel	10,5x61x33/57,5	87->	7596877	**C528**	FISSO
1.9 Diesel - Turbo Diesel	10,5x61x33/57,5	87->	7596876	**C529**	FISSO
2.5 CRD Diesel-Turbo Diesel	38x67,5x35,5	86->	5495830	**C535**	SUPERIORE
2.5 SOFIM Diesel	67x34	90->	7301662	**C536**	INFERIORE
2.5 SOFIM Diesel	63,7x34	90->	7301661	**C537**	SUPERIORE
1.9 Diesel Turbo Diesel Comandi Vari	20x80x23	94->	7797142	**C539**	FISSO
1.9 Turbo Diesel Condiz.	20x80x27	94->	7733200	**C544**	SUPERIORE
1.9 Diesel - Turbo Diesel	60x34	94->	9617188680	**C545**	FISSO
1.9 Diesel - Turbo Diesel	60x34	95->	9615923380	**C546**	MOBILE
2.0 JTD Autobus/Furgonato	17x60x25,5	01-02	7700102931	**C752**	PULEGGIA
2.0 JTD Pianale piatto	17x60x25,5	02->	7700102931	**C752**	PULEGGIA cusc.+staffa
2.8 SOFIM Diesel	25x67x34	94->	4740846	**C512**	INFERIORE
2.8 SOFIM Diesel	25x63,7x34	94->	4740847	**C513**	SUPERIORE
2.8 SOFIM Diesel	25x67x34	94->	4740846	**C512**	INFERIORE
2.8 SOFIM Diesel	25x67x34	94->	4740846	**C512**	SUPERIORE
2.8 SOFIM Diesel	67x34	94->	7301662	**C536**	INFERIORE
2.8 SOFIM Diesel	63,7x34	94->	7301661	**C537**	MOBILE cusc.+staffa
2.0 Panorama Combinato/Furgonato	13x57x33/41	94-02	82932	**C781**	
2.0 Pianale piatto Autotelaio/Bipower	13x57x33/41	94-02	82932	**C781**	
DUNA					
1.1-1.3	62,5x25	86-90	4427068	**C505**	MOBILE
1.7 Diesel	10,5x61x30/51	86-94	7553564	**C526**	FISSO
1.7 Diesel	10,5x61x30/51	86-94	7553565	**C527**	MOBILE
FIORINO					
1.05-1.0-1.1-1.3	62,5x25	78-92	4427068	**C505**	FISSO
1.1-1.3-1.4-1.6	30x57x24	89->	5972277	**C525**	MOBILE
1.5	10,5x56x27/39,5	89-93	5997325	**C522**	MOBILE
1.3 Diesel	65x31	88->	4438894	**C506**	FISSO
1.3 Diesel	57/65x31	88->	5952181	**C507**	MOBILE
1.7 Diesel - Turbo Diesel	10,5x61x30/51	88->	7553564	**C526**	FISSO
1.7 Diesel - Turbo Diesel	10,5x61x30/51	88->	7553565	**C527**	MOBILE
1.7 Turbo Diesel	10,3x80x28,5/30	93->	7789752	**C763**	FISSO
1.4-1.6 (Comandi vari)	20x80x23	94->	7797142	**C539**	MOBILE
BRASIL	8,2x55,5x29,05	05->	46736886	**C792**	

TENDICINGHIA DISTRIBUZIONE
BELT TIGHTENERS
TENDEURS DE COURROIE

follows FIAT

MODELLO	DIMENSIONI	ANNO	RIF ORIGINALE	RIF CORAM	NOTE
IDEA					
1.9 JTD	10,2x53x29/31,5	04->	7763644	**C740**	MOBILE
1.9 JTD	8,2x64,778x30/41	04->	7778565	**C767**	
MAREA					
100 1.6 16V (Comandi vari+Condizionatore)	20x80x23	96->	7797142	**C539**	FISSO
100 1.6 16V	60x29	96->	46416489	**C732**	FISSO
100 1.6 16V	12,3x65x30,5/35,5	96->	46554826	**C733**	MOBILE
1.8	8,5x57x29/35	95->	6064403	**C739**	MOBILE
1.8 115 16V /weekend	8,5x57x29/35	96->	6064403	**C739**	MOBILE
1.9 JTD / TD Weekend	10,2x53x29/31,5	96-01	7763644	**C740**	MOBILE
1.9 Turbo Diesel -2.0 20v-2.4 Turbo Diesel/JTD	10,2x53x29/31,5	95->	7763644	**C740**	MOBILE
2.0 20 V /Weekend	10,2x53x29/31,5	96-01	7763644	**C740**	MOBILE
1.9 JTD	10,5x80x25/30	99->	46454419	**C753**	FISSO
1.9 Turbo DS	10,5x80x25/30	96->	46454419	**C753**	MOBILE
1.4 12V	17x65,3x29	96->	46406204	**C754**	FISSO
1.8 16V	17x65,3x29	96->	46406204	**C754**	FISSO
1.9 JTD	17x65,3x29	99->	46406204	**C754**	FISSO
1.9 Turbo DS	17x65,3x29	96->	46406204	**C754**	FISSO
2.0 20 V	10,3x80x28,5x30	93->	7789752	**C763**	FISSO
1.9 JTD/Weekend	8,2x64,778x30/41	99-01	7778565	**C767**	
1.9 Turbo DS/Weekend	8,2x64,778x30/41	96->	7778565	**C767**	
2.4 JTD/Weekend	8,2x64,778x30/41	99->	7778565	**C767**	
2.4 TD/Weekend	8,2x64,778x30/41	96-99	7778565	**C767**	
1.4 80 12V/Weekend	64,5x28,7	96->	7782192	**C782**	
MULTIPLA					
100 1.6 16V (Comandi vari+Condizionatore)	20x80x23	98->	7797142	**C539**	FISSO
100	60x29	98->	46416489	**C732**	FISSO
100	12,3x65x30,5/35,5	98->	46554826	**C733**	MOBILE
1.9 JTD	10,2x53x29/31,5	99-00	7763644	**C740**	MOBILE
1.9 Turbo Diesel	10,2x53x29/31,5	99->	7763644	**C740**	MOBILE
1.9 JTD	10,5x80x25/30	99->	46454419	**C753**	FISSO
1.9 JTD	17x65.3x29	99->	46406204	**C754**	FISSO
1.9 JTD	8,2x64,778x30/41	99-02	7778565	**C767**	
NUOVA PUNTO					
1.2 8v	30x57x24	99->	5972277	**C525**	FISSO
1.9 Diesel	10,2x53x29/31,5	99->	7763644	**C740**	FISSO

TENDICINGHIA DISTRIBUZIONE
BELT TIGHTENERS
TENDEURS DE COURROIE

follows FIAT

MODELLO	DIMENSIONI	ANNO	RIF ORIGINALE	RIF CORAM	NOTE
PALIO Weekend					
1.2	30x57x24	96->	5972277	**C525**	MOBILE
1.7 Turbo Diesel	10,5x61x30/51	96->	7553564	**C526**	FISSO
1.7 Turbo Diesel	10,5x61x30/51	96->	7553565	**C527**	FISSO
1.6 16 v-1.7 Turbo Diesel (Comandi vari)	20x80x23	96->	7797142	**C539**	FISSO
1.7 Turbo Diesel (Condizionatore)	20x80x17	96->	7749452	**C543**	MOBILE
1.6 16 v	60x29	97->	46416489	**C732**	FISSO
1.6 16 v	12,3x65x30,5/35,5	97->	46554826	**C733**	MOBILE
1.9 D	10,2x53x29/31,5	01->	7763644	**C740**	MOBILE
1.9 DS	17x65,3x29	01->	46406204	**C754**	FISSO
1.2	65x23	01->	46756937	**C765**	
PALIO					
1.9 D	8,2x64,778x30/41	01->	7778565	**C767**	
PANDA					
750-1.0-1.1 Fire	30x57x24	83->	5972277	**C525**	MOBILE
1.3 Diesel	65x31	86-93	4438894	**C506**	FISSO
1.3 Diesel	57/65x26	86-93	5952181	**C507**	FISSO
PUNTO					
1.2-1.6 CABRIO	30x57x24	93->	5972277	**C525**	FISSO
1.4 GT Turbo	30x57x24	93->	5972277	**C525**	FISSO
50-55-60-75-90	30x57x24	93->	5972277	**C525**	FISSO
1.7 Diesel Turbo Diesel	10,5x61x30/51	93->	7553564	**C526**	FISSO
1.7 Diesel Turbo Diesel	10,5x61x30/51	93->	7553565	**C527**	FISSO
1.4 Turbo (Comandi vari)	20x80x23	93->	7797142	**C539**	FISSO
1.6 55-60-75-90 - 1.6 Cabrio (Comandi vari)	20x80x23	93->	7797142	**C539**	MOBILE
1.7 Turbo Diesel (Condizionatore)	20x80x23	94->	7797142	**C539**	FISSO
90 GT (Condizionatore)	20x80x23	94->	7797142	**C539**	FISSO
1.7 Diesel-Turbo Diesel (Condizionatore+c.vari)	20x80x17	92-97	7749452	**C543**	FISSO
1.8 130 HGT	8,5x57x29/35	99->	60671573	**C739**	MOBILE
1.9 DS /JTD/Van	10,2x53x29/31,5	99->	7763644	**C740**	MOBILE
1.9 DS	10,5x80x25/30	99->	46454419	**C753**	MOBILE
1.9 JTD	10,5x80x25/30	99->	46454419	**C753**	FISSO
1.8 16V	17x65,3x29	99->	46406204	**C754**	MOBILE
1.9 DS	17x65,3x29	99->	46406204	**C754**	FISSO
1.9 JTD	17x65,3x29	99->	46406204	**C754**	FISSO
1.9 D Van	8,2x64,778x30/41	00->	7778565	**C767**	
1.9 DS	8,2x64,778x30/41	99->	7778565	**C767**	
1.9 JTD	8,2x64,778x30/41	01->	7778565	**C767**	
1.9 JTD 80	8,2x64,778x30/41	99->	7778565	**C767**	
1.9 JTD Van	8,2x64,778x30/41	00->	7778565	**C767**	

TENDICINGHIA DISTRIBUZIONE
BELT TIGHTENERS
TENDEURS DE COURROIE

follows FIAT

MODELLO	DIMENSIONI	ANNO	RIF ORIGINALE	RIF CORAM	NOTE
REGATA					
70-70ES-85	25x56x29	83-85	4386575	**C517**	FISSO
100 i.e Super	25x56x29	85-86	4386575	**C517**	MOBILE
70-70ES-85	10,5x56x27/39,5	85-89	5997325	**C522**	FISSO
100 i.e. Super	25x67x28	86-89	4443703	**C515**	MOBILE
100	10,5x60x25/48	86-89	5956109	**C523**	INFERIORE
1.7 Diesel	25x70,5x33	83-86	7540301	**C518**	SUPERIORE
1.7 Diesel	10,5x65x33/48	83-86	5966001	**C519**	MOBILE
1.9 Diesel	10,5x61x33/47	83-85	5992517	**C521**	MOBILE
RITMO					
60	62,5x25	78-82	4427068	**C505**	FISSO
60-65-75	25x60x29	78-82	4385583	**C516**	FISSO
60-70-75-1.6 105TC	25x56x29	83-85	4386575	**C517**	MOBILE
60-65-70-75	10,5x56x27/39,5	85->	5997325	**C522**	MOBILE
85 Super	10,5x56x27/39,5	81->	5997325	**C522**	FISSO
105-125-130 TC	25x67x28	80->	4443703	**C515**	MOBILE
100-125-130 TC	10,5x60x25/48	85-88	5956109	**C523**	SUPERIORE
1.7 Diesel	25x70,5x33	80-82	7540301	**C518**	INFERIORE
1.7 Diesel	25x70,5x33	80-82	7540301	**C518**	SUPERIORE
1.7 Diesel	10,5x65x33/48	82-85	5966001	**C519**	INFERIORE
1.7 Diesel	25x70,5x33	82-85	7540301	**C518**	FISSO
SEICENTO					
1.1	30x57x24	97->	5972277	**C525**	FISSO
SCUDO					
1.6	30x57x24	95->	5972277	**C525**	FISSO
1.6 Condizionatore	20x80x27	94->	7733200	**C544**	MOBILE
1.9 Diesel-Turbo Diesel	60x34	94->	9617188680	**C545**	FISSO
1.9 Diesel-Turbo Diesel	60x34	95->	9615923380	**C546**	PULEGGIA
2.0 Diesel	13x60x34/42	98->	9400829629	**C742**	FISSO
2.0 Diesel	10x60x34/42	98->	9400830319	**C743**	MOBILE
1.9 DS/Diesel/TD Eco	17x60x25,5	96->	7700102931	**C752**	PULEGGIA
1.9 TD Furgonato	17x60x25,5	96-98	7700102931	**C752**	PULEGGIA
1.9 Turbo DS	17x60x25,5	96->	7700102931	**C752**	PULEGGIA
SCUDO Combinato					
1.9 D/TD/Eco	85x26/35,5	96-98	9607451480	**C769**	
1.9 D	10x70x27/29	96->	9618888580	**C794**	
1.9 TD	10x70x27/29	96->	9618888580	**C794**	
1.9 TD Eco	10x70x27/29	96->	9618888580	**C794**	
2.0 JTD	10x70x27/29	99->	9618888580	**C794**	

TENDICINGHIA DISTRIBUZIONE
BELT TIGHTENERS
TENDEURS DE COURROIE

follows FIAT

MODELLO	DIMENSIONI	ANNO	RIF ORIGINALE	RIF CORAM	NOTE
SCUDO Furgonato					
1.9 D	10x70x27/29	96->	9618888580	**C794**	
1.9 TD	10x70x27/29	96->	9618888580	**C794**	
2.0 JTD	10x70x27/29	99->	9618888580	**C794**	
STILO					
1.8 16V / Multi Wagon	8,5x57x29/35	01->	60671573	**C739**	MOBILE
1.9 JTD/Multi Wagon	10,2x53x29/31,5	01-03	7763644	**C740**	MOBILE
2.4 20V	10,2x53x29/31,5	01->	7763644	**C740**	MOBILE
1.9 JTD	10,5x80x25/30	01->	46454419	**C753**	FISSO
1.8 16V	17x65,3x29	01->	46406204	**C754**	FISSO
1.9 JTD	17x65,3x29	01->	46406204	**C754**	FISSO
1.9 JTD/Multi Wagon	8,2x64,778x30/41	01->	7778565	**C767**	
STRADA					
1.9 D/JTD	10,2x53x29/31,5	00->	7763644	**C740**	MOBILE
1.2	65x23	03->	46756937	**C765**	
1.9 D/JTD	8,2x64,778x30/41	00->	7778565	**C767**	
TIPO					
1.1-1.4-1.6	30x57x24	88->	5972277	**C525**	MOBILE
1.8-2.0 16v	10,5x56x27/39,5	89-95	5997325	**C522**	MOBILE
1.6 i-1.8 i	10,5x60x25/48	88-95	5956109	**C523**	MOBILE
1.8 i.e -GT-2.0	10,5x60x25/46,5	90-95	7541718	**C532**	MOBILE
1.7-1.9 Diesel Turbo Diesel		88->	7596728	**C533**	FISSO
1.7-1.9 Diesel Turbo Diesel		88->	7596727	**C534**	MOBILE
1.7-1.9 Diesel Turbo Diesel	10,5x61x33/57,5	88->	7596877	**C528**	FISSO
1.7-1.9 Diesel Turbo Diesel	10,5x61x33/57,5	88->	7596876	**C529**	FISSO
1.7 Diesel-1.9 Diesel Turbo Diesel Condizionatore	20x78x27,5	88-93	7554724	**C538**	FISSO
Diesel-Turbo Diesel Condizionatore	20x80x23	92->	7797142	**C539**	FISSO
TEMPRA					
1.4-1.6	30x57x24	90->	5972277	**C525**	MOBILE
1.8-2.0 16v	10,5x56x27/39,5	90-93	5997325	**C522**	MOBILE
1.8 i.e	10,5x60x25/48	90-93	5956109	**C523**	MOBILE
1.8 -2.0	10,5x60x25/46,5	90->	7541718	**C532**	MOBILE
1.9 Diesel-Turbo Diesel		89->	7596728	**C533**	FISSO
1.10 Diesel-Turbo Diesel		89->	7596727	**C534**	FISSO
1.9 Diesel-Turbo Diesel (Condizionatore)	20x78x27,5	90-93	7554724	**C538**	FISSO
1.9 Diesel-Turbo Diesel (Condizionatore)	20x80x23	92->	7797142	**C539**	MOBILE
1.9 Diesel-Turbo Diesel	10,5x61x33/57,5	90->	7596877	**C528**	FISSO
1.9 Diesel-Turbo Diesel	10,5x61x33/57,5	90->	7596876	**C529**	MOBILE

TENDICINGHIA DISTRIBUZIONE
BELT TIGHTENERS
TENDEURS DE COURROIE

follows FIAT

MODELLO	DIMENSIONI	ANNO	RIF ORIGINALE	RIF CORAM	NOTE
ULYSSE					
1.8	90x25	97-02	9608989980	**C785**	
1.8	90x24,7/32,5	97-02	9608859180	**C768**	
1.8-2.0 i.e-2.0i.e Turbo	59x22/32,6	94->	96052662	**C738**	MOBILE
1.9 Turbo Diesel	60x34	95->	9617188680	**C545**	FISSO
1.9 Turbo Diesel	60x34	95->	9615923380	**C546**	PULEGGIA
1.9 Turbo DS	17x60x25,5	95-02	7700102931	**C752**	FISSO
1.9 TD	85x26/35,5	95-02	9607451480	**C769**	
ULYSSE (220)					
1.9 TD (220AH5)	10x70x27/29	95-02	9618888580	**C794**	
ULYSSE					
2.0i.e. 16 v	10x60x34/42	94->	9400830379	**C737**	FISSO
2.0 JTD	13x60x34/42	99->	9400829629	**C742**	FISSO
2.0 JTD	10x60x34/42	99->	9400830319	**C743**	FISSO
2.0 Turbo Diesel	90x24,7/32,5	94-02	9608859180	**C768**	
2.0 16V	13x57x33/41	98-00	82932	**C781**	
2.0/ Turbo	90x25	94-02	9608989980	**C785**	
2.0 16v	90x25	98-00	9608989980	**C785**	
ULYSSE (179AX)					
2.0 JTD	10x70x27/29	02->	9618888580	**C794**	
ULYSSE (220)					
2.0 JTD	10x70x27/29	99-02	9618888580	**C794**	
ULYSSE					
2.1 Turbo Diesel	10x60x34/42	91->	9400830379	**C737**	PULEGGIA
2.1 Turbo DS	17x60x25,5	96-99	7700102931	**C752**	MOBILE
2.1 TD	85x26/35,5	96-99	9607451480	**C769**	
ULYSSE (220)					
2.1 TD	10x70x27/29	96-99	9618888580	**C794**	

TENDICINGHIA DISTRIBUZIONE
BELT TIGHTENERS
TENDEURS DE COURROIE

follows FIAT

MODELLO	DIMENSIONI	ANNO	RIF ORIGINALE	RIF CORAM	NOTE
UNO					
45-60-70 Fire	30x57x24	83-93	5972277	**C525**	MOBILE
994 STING	62.5x25	89	4427068	**C505**	FISSO
900-1.0-1.1 Fire	30x57x24	89->	5972277	**C525**	FISSO
1.0 i.e-1.4 i.e Fire	30x57x24	89->	5972277	**C525**	FISSO
1.4 i.e Turbo	30x57x24	89->	5972277	**C525**	FISSO
1.1 cs	30x57x24	88->	5972277	**C525**	MOBILE
1.1 cs	62.5x25	89-92	4427068	**C505**	MOBILE
1.3 Diesel	65x31	83-95	4438894	**C506**	FISSO
1.3 Diesel	57/65x26	83-95	5952181	**C507**	FISSO
55-60-70 SL-SX	25x56x29	83-87	4386575	**C517**	MOBILE
55-60-70 S-SL-SX	10,5x56x27/39,5	87->	5997325	**C522**	MOBILE
1.1-1.4-1.5	10,5x56x27/39,5	89->	5997325	**C522**	MOBILE
1.3 Turbo i.e-75SX	10,5x56x27/39,5	83->	5997325	**C522**	MOBILE
1.3-1.4 Turbo Diesel	10,5x61x30/51	83-93	7553564	**C526**	FISSO
1.3-1.4 Turbo Diesel	10,5x61x30/51	83-93	7553565	**C527**	MOBILE
1.7-1.9 Diesel-1.7 cs	10,5x61x30/51	89-95	7553564	**C526**	FISSO
1.7-1.9 Diesel-1.7 cs	10,5x61x30/51	89-95	7553565	**C527**	MOBILE
1.9 Diesel		89-93	7596728	**C533**	FISSO
1.9 Diesel		89-93	7596727	**C534**	MOBILE
1.9 Diesel	10,5x61x33/57,5	89->	7596877	**C528**	FISSO
1.9 Diesel	10,5x61x33/57,5	89->	7596876	**C529**	FISSO
UNO Fire					
BRASIL	8,2x55,5x29,05	05->	46736886	**C792**	
X1/9					
1.5 5 marce	25x56x29	78-87	4386575	**C517**	MOBILE

TENDICINGHIA DISTRIBUZIONE
BELT TIGHTENERS
TENDEURS DE COURROIE

FORD

MODELLO	DIMENSIONI	ANNO	RIF ORIGINALE	RIF CORAM	NOTE
CAPRI					
1.3-1.6-1.8-2.0 OHC	47x26	73-86	1496915	**C631**	MOBILE
CONSUL					
2.0 OHC	47x26	72-82	1496915	**C631**	MOBILE
CORTINA					
1.3-1.6-2.0 OHC	47x26	72-82	1496915	**C631**	MOBILE
ECONOVAN					
1.4 Autobus - 1.4 Furgonato	57x30	86-92	6131141	**C791**	
ESCORT					
1.1-1.3-1.4-1.6	17x76x26	80->	7053546	**C759**	MOBILE
1.1-1.3-1.4-1.6	17x76x26	80->	6789631	**C762**	MOBILE
86 EXPRESS 1.4-1.4 i	57x30	86-94	6131141	**C791**	
95 FURGONATO 1.4	57x30	95->	6131141	**C791**	
IV 1.4 - 1.4 Cabriolet - 1.4 Station Wagon	57x30	85-90	6131141	**C791**	
V 1.4 - 1.4 Cabriolet - 1.4 Station Wagon	57x30	90-92	6131141	**C791**	
VI 1.4 - 1.4i - 1.4 Station Wagon	57x30	92-95	6131141	**C791**	
VII 1.4 - 1.4 Cabriolet - 1.4 Station Wagon	57x30	92-95	6131141	**C791**	
1.6 RS	47x26	82-90	1496915	**C631**	MOBILE
81 EXPRESS 1.6	57x30	81-90	6131141	**C791**	
III 1.6-1.6 i-1.6 RS-1.6 XR3i-RS1600i	57x30	80-85	6131141	**C791**	
IV 1.6 - 1.6i Cabriolet - 1.6 i SW- 1.6 XR3i Cabriolet	57x30	86-90	6131141	**C791**	
V 1.6 - 1.6 Cabriolet - 1.6 Station Wagon	57x30	90-92	6131141	**C791**	
86 EXPRESS 1.8 Diesel	10,3x56x24,7/27	88-90	1005823	**C770**	DISTRIBUZIONE
86 EXPRESS 1.8 Diesel	23X60/66X27,3/38	88-90	6177882	**C771**	
91 EXPRESS 1.8 Diesel	10,3x56x24,7/27	90-94	1005823	**C770**	DISTRIBUZIONE
91 EXPRESS 1.8 Diesel	23X60/66X27,3/38	90-94	6177882	**C771**	
95 FURGONATO 1.8 Diesel/Turbo Diesel	10,3x56x24,7/27	95-01	1005823	**C770**	DISTRIBUZIONE
95 FURGONATO 1.8 Diesel/Turbo Diesel	23X60/66X27,3/38	95-01	6177882	**C771**	
95 FURGONATO 1.8 Diesel/Turbo Diesel	11,5X52X25,5/28,2	95-01	1005516	**C772**	
IV 1.8 Diesel	10,3x56x24,7/27	89-90	1005823	**C770**	DISTRIBUZIONE
IV 1.8 Diesel	23X60/66X27,3/38	89-90	6177882	**C771**	
V 1.8 Diesel	10,3x56x24,7/27	90-92	1005823	**C770**	DISTRIBUZIONE
V 1.8 Diesel	23X60/66X27,3/38	90-92	6177882	**C771**	
VI 1.8 Diesel/Turbo Diesel	10,3x56x24,7/27	89-95	1005823	**C770**	DISTRIBUZIONE
VI 1.8 Diesel/Turbo Diesel	23X60/66X27,3/38	92-95	6177882	**C771**	
VII 1.8 Diesel/Turbo Diesel	10,3x56x24,7/27	95-99	1005823	**C770**	DISTRIBUZIONE
VII 1.8 Diesel/Turbo Diesel	23X60/66X27,3/38	95-99	6177882	**C771**	
VII 1.8 Diesel/Turbo Diesel	11,5X52X25,5/28,2	95-99	1005516	**C772**	
VIII 1.8 Diesel/Turbo Diesel	11,5X52X25,5/28,2	95-99	1005516	**C772**	
CLASSIC TURNIER 1.8 Turbo Diesel	23X60/66X27,3/38	98-00	6177882	**C771**	
2.0	47x26	75-80	1496915	**C631**	FISSO

TENDICINGHIA DISTRIBUZIONE
BELT TIGHTENERS
TENDEURS DE COURROIE

follows FORD

MODELLO	DIMENSIONI	ANNO	RIF ORIGINALE	RIF CORAM	NOTE
FIESTA					
1.1-1.3-1.4-1.6	17x76x26	76->	7053546	**C759**	MOBILE
1.1-1.3-1.4-1.6	17x76x26	76->	6789631	**C762**	MOBILE
II 1.4	57x30	85-89	6131141	**C791**	
III 1.4 - 1.4 Cat.	57x30	89-95	6131141	**C791**	
FURGONATO 1.4 i	57x30	96-99	6131141	**C791**	
1.6 i Turbo-2.0	47X26	75-92	1496915	**C631**	MOBILE
II 1.6 XR2	57x30	84-89	6131141	**C791**	
III 1.6 -1.6 Turbo-1.6 XR2i	57x30	89-94	6131141	**C791**	
1.8 Diesel	10,3x56x24,7/27	89-96	1005823	**C770**	DISTRIBUZIONE
III 1.8 Diesel	10,3x56x24,7/27	89-95	1005823	**C770**	DISTRIBUZIONE
III 1.8 Diesel	23X60/66X27,3/38	89-95	6177882	**C771**	
III 1.8 Diesel	23X60/66X27,3/38	89-95	6177882	**C771**	
III 1.8 Diesel	11,5X52X25,5/28,2	89-95	1005516	**C772**	
IV 1.8 Diesel	10,3x56x24,7/27	95-00	1005823	**C770**	DISTRIBUZIONE
IV 1.8 Diesel	23X60/66X27,3/38	95-00	6177882	**C771**	
IV 1.8 Diesel	23X60/66X27,3/38	95-00	6177882	**C771**	
IV 1.8 Diesel	11,5X52X25,5/28,2	95-00	1005516	**C772**	
FURGONATO 1.8 Diesel	10,3x56x24,7/27	89-96	1005823	**C770**	DISTRIBUZIONE
FURGONATO 1.8 Diesel	23X60/66X27,3/38	89-96	6177882	**C771**	
FURGONATO 1.8 Diesel	11,5X52X25,5/28,2	89-90	1005516	**C772**	
GALAXY					
1.9 TDI	M8x1,25x78x26	95-00	1051901	**C774**	
1.9 TDI	67/68x30/40,3	95-00	1669904	**C803**	
1.9 TDI(66KW)	8x28,5x29/31,5	95->	7400530	**C787**	
1.9 TDI	8,3x28,5x34	95->	1100585	**C783**	
1.9 TDI	40x36	95-03	1221491	**C784**	
1.9 TDI(81KW)	8x28,5x29/31,5	97-00	7400530	**C787**	
GRANADA					
1.6-1.8-2.0	47x26	71-85	1496915	**C631**	MOBILE
2.0	47x26	72-94	1496915	**C631**	FISSO
KA					
1.3 Comandi vari	17x70x26	96->	11281427252	**C741**	PULEGGIA
1.3	/x70x26	96->	7109163	**C756**	FISSO
MONDEO					
I 1.8 Turbo Diesel	10,3x56x24,7/27	93-96	1005823	**C770**	DISTRIBUZIONE
I 1.8 Turbo Diesel	23X60/66X27,3/38	93-96	6177882	**C771**	
I 1.8 Turbo Diesel	11,5X52X25,5/28,2	93-96	1005516	**C772**	
I 1.8 Turbo Diesel Familiare / Tre volumi	11,5X52X25,5/28,2	93-96	1005516	**C772**	
II 1.8 Diesel/Turbo Diesel	10,3x56x24,7/27	96-00	1005823	**C770**	DISTRIBUZIONE
II 1.8 Turbo Diesel	23X60/66X27,3/38	96-00	6177882	**C771**	
II 1.8 Turbo Diesel	23X60/66X27,3/38	96-00	6177882	**C771**	
II 1.8 Turbo Diesel/Familiare/Tre volumi	11,5X52X25,5/28,2	96-00	1005516	**C772**	

TENDICINGHIA DISTRIBUZIONE
BELT TIGHTENERS
TENDEURS DE COURROIE

follows FORD

MODELLO	DIMENSIONI	ANNO	RIF ORIGINALE	RIF CORAM	NOTE
ORION					
1.3-1.4-1.6	17x76x26	83->	7053546	**C759**	MOBILE
1.3-1.4-1.6	17x76x26	83->	6789631	**C762**	MOBILE
II 1.4 - 1.4 Cat	57x30	85-90	6131141	**C791**	
III 1.4	57x30	90-93	6131141	**C791**	
1.6 i	47x26	86-90	1496915	**C631**	MOBILE
I 1.6 - 1.6i	57x30	83-86	6131141	**C791**	
II 1.6 - 1.6i	57x30	85-90	6131141	**C791**	
III 1.6i	57x30	90-92	6131141	**C791**	
II 1.8 Diesel	10,3x56x24,7/27	89-90	1005823	**C770**	DISTRIBUZIONE
II 1.8 Diesel	23X60/66X27,3/38	89-90	6177882	**C771**	
III 1.8 Turbo Diesel	10,3x56x24,7/27	90-93	1005823	**C770**	DISTRIBUZIONE
III 1.8 Turbo Diesel/ Diesel	23X60/66X27,3/38	90-93	6177882	**C771**	
2.0	47x26	75-80	1496915	**C631**	MOBILE
P100					
1.6-2.0 Pick up	47x26	82-94	1496915	**C631**	MOBILE
II 1.8 Turbo Diesel	10,3x56x24,7/27	87-92	1005823	**C770**	DISTRIBUZIONE
II 1.8 Turbo Diesel	23X60/66X27,3/38	87-92	6177882	**C771**	
PINTO					
1.6-2.0	47x26	92->	1496915	**C631**	MOBILE
SIERRA					
1.3-1.6-1.8-2.0	47x26	82-93	1496915	**C631**	MOBILE
1.6-2.0 VAN	47x26	->92	1496915	**C631**	MOBILE
1.6-1.6 i	57x30	87-93	6131141	**C791**	
1.8 Turbo Diesel	10,3x56x24,7/27	88-93	1005823	**C770**	DISTRIBUZIONE
1.8 Turbo Diesel	23X60/66X27,3/38	88-93	6177882	**C771**	
SCORPIO					
1.8-2.0	47x26	85->	1496915	**C631**	MOBILE
TAUNUS					
1.3-1.6-2.0	47x26	70-82	1496915	**C631**	MOBILE
TRANSIT					
1.6-2.0	47x26	65->	1496915	**C631**	MOBILE
2.4 Diesel	31x63x16/30	->85	1500004	**C630**	FISSO

follows FORD

MODELLO	DIMENSIONI	ANNO	RIF ORIGINALE	RIF CORAM	NOTE
TRANSIT Autobus					
2.5 D	30x60x32/45	83-92	6121753	**C815**	
2.5 DI	30x60x32/45	91-00	6121753	**C815**	
2.5 TD	30x60x32/45	91-00	6121753	**C815**	
TRANSIT Furgonato					
2.5 D	30x60x32/45	83-91	6121753	**C815**	
2.5 DI	30x60x32/45	91-00	6121753	**C815**	
2.5 TD	30x60x32/45	91-00	6121753	**C815**	
2.5 TDI	30x60x32/45	94-00	6121753	**C815**	
TRANSIT Pianale piatto					
2.5D	30x60x32/45	83-89	6121753	**C815**	
2.5 DI	30x60x32/45	88-00	6121753	**C815**	
2.5 TD	30x60x32/45	88-00	6121753	**C815**	

HUNDAY

COUPE' (RD)					
1.6 16V	10,3x70x30/40	98-02	24410-23011	**C811**	
1.6 i 16V	10,3x70x30/40	96-02	24410-23011	**C811**	
COUPE' (GK)					
2.0	10,3x70x30/40	02->	24410-23011	**C811**	
COUPE' (RD)					
2.0 16V	10,3x70x30/40	96-02	24410-23011	**C811**	
COUPE' (GK)					
2.0 GLS	10,3x70x30/40	03->	24410-23011	**C811**	
ELANTRA					
1.6 - 1.8 - 2.0	10,3x70x30/40	00->	24410-23011	**C811**	
ELANTRA tre volumi					
1.6 - 1.8 - 2.0	10,3x70x30/40	00->	24410-23011	**C811**	

TENDICINGHIA DISTRIBUZIONE
BELT TIGHTENERS
TENDEURS DE COURROIE

follows HUNDAY

MODELLO	DIMENSIONI	ANNO	RIF ORIGINALE	RIF CORAM	NOTE
LANTRA II					
1.6 16V - 1.6 i - 1.8 16V	10,3x70x30/40	95-00	24410-23011	**C811**	
2.0 16V	10,3x70x30/40	96-00	24410-23011	**C811**	
LANTRA II Wagon					
1.6 16V - 1.6 i - 1.8 16V - 2.0 16V	10,3x70x30/40	96->	24410-23011	**C811**	
MATRIX					
1.8	10,3x70x30/40	01->	24410-23011	**C811**	

LADA

110					
2.0	59x26/33,5	96->	5636738	**C775**	
2.0 i	8x52/58x29,5	96->	5636425	**C776**	
2.0 i	8x63/69x29,5	96->	636416	**C777**	
SAGONA					
1.3	25x57/65x26	72->	21051006118	**C650**	FISSO
1.5	25x57/65x26	92-94	21051006118	**C650**	FISSO
SAMARA					
1.1-1.3-1.5	25x57/65x26	72->	21051006125	**C650**	FISSO
1.1-1.3-1.5	10,2x54,5x21	97->	2108-1006120	**C747**	
NIVA					
1.9 Diesel	60x34	93	212151006138	**C601**	MOBILE
1.9 Diesel	60x34	93	212151006120	**C600**	FISSO
1.9 Diesel	60x34	94-98	0829.33	**C546**	MOBILE
1.9 Diesel	60x34	94-98	0830.13	**C545**	
VAZ					
2112 - 21103 - 211036 V16	10,2x55x26,5	98->	2112-1006120	**C744**	FISSO
2112 - 21103 - 211036 V16	10,2x55x26,5	98->	2112-1006135-01	**C745**	

TENDICINGHIA DISTRIBUZIONE
BELT TIGHTENERS
TENDEURS DE COURROIE

LANCIA

MODELLO	DIMENSIONI	ANNO	RIF ORIGINALE	RIF CORAM	NOTE
DEDRA					
2.0 16v	10,5x56x27/39,5	94->	5997325	**C522**	FISSO
1.6-1.6 8 v	30x57x24	89->	5972277	**C525**	FISSO
1.9 Turbo Diesel	10,5x61x33/57,5	89->	7596877	**C528**	FISSO
1.9 Turbo Diesel	10,5x61	89->	7596876	**C529**	FISSO
1.8-2.0 16v	10,5x60x25/46,5	94->	7541718	**C532**	MOBILE
1.8-2.0-2.0 HF Turbo	10,5x60x25/46,5	89->	7541718	**C532**	MOBILE
1.9 Turbo Diesel		89->	7596728	**C533**	FISSO
1.9 Turbo Diesel		89->	7596727	**C534**	MOBILE
1.9 Turbo Diesel (Condizionatore)	20x78x27,5	89-94	7554724	**C538**	FISSO
1.6 (alter.+p.acqua)	20x80x23	89-94	7702173	**C539**	MOBILE
1.9 Turbo Diesel (Condizionatore)-1.6-1.6 8v (C.vari)	20x80x23	89-98	7702173	**C539**	FISSO
1.6 8/16 v (Comandi vari +c. compr.)	20x80x23	89-94	46424716	**C539/F**	FISSO
1.9 Turbo Diesel (Condizionatore)	20x80x23	94->	46424716	**C539/F**	MOBILE
1.6 16 v	60x29	94->	46416489	**C732**	FISSO
1.6 16 v	12,3x65x30,5/35,5	94->	46554826	**C733**	FISSO
1.8 16v /SW	8,5x57x29/35	94-99	6064403	**C739**	FISSO
1.8 GT 16V /SW	8,5x57x29/35	96-99	6064403	**C739**	MOBILE
1.8 i.e 16V	17x65,3x29	96-99	46406204	**C754**	MOBILE
1.8 16 V /GT/SW	8,1x65x29	96-99	60596372	**C778**	
DELTA					
1.5-1.6	25x67x28	79-85	4443703	**C515**	FISSO
1.3	25x60x29	79-82	4385583	**C516**	FISSO
1.3-1.5-1.6 GT-HF T.	25x56x29	83-85	4386575	**C517**	MOBILE
1.3-1.5-Integrale	10,5x56x27/39,5	85-92	5997325	**C522**	FISSO
2.0 16v - 2.0 4x4	10,5x56x27/39,5	87->	5997325	**C522**	MOBILE
1.6 i.e GT -HF T.	10,5x60x25/48	85-92	5956109	**C523**	MOBILE
1.6	30x57x24	93->	5972277	**C525**	FISSO
1.8 - 2.0 8 v	10,5x60x25/46,5	87->	7541718	**C532**	MOBILE
4 WD	10,5x60x25/46,5	86-92	7541718	**C532**	FISSO
1.9 Turbo Diesel		93->	7596728	**C533**	FISSO
1.9 Turbo Diesel		93->	7596727	**C534**	MOBILE
TD Condizionatore	20x78x27,5	86->	7554724	**C538**	MOBILE
1.3-1.6 Condiz.	20x80x23	83-92	7702173	**C539**	FISSO
1.6 Condizionatore	20x90x23	93->	7702173	**C539**	MOBILE
1.8 i.e 16V	17x65,3x29	96-99	46406204	**C754**	FISSO
DELTA II					
1.8 i.e 16V GT	8,5x57x29/35	96-99	6064403	**C739**	MOBILE
1.8 i.e 16V GT	8,1x65x29	96-99	60596372	**C778**	

TENDICINGHIA DISTRIBUZIONE
BELT TIGHTENERS
TENDEURS DE COURROIE

follows LANCIA

MODELLO	DIMENSIONI	ANNO	RIF ORIGINALE	RIF CORAM	NOTE
LYBRA					
1.6 16v (Comandi vari+c.compr.)	20x80x23	99->	46424716	**C539/F**	MOBILE
1.6 16 v	60x29	99->	46416489	**C732**	FISSO
1.6 16 v	12,3x65x30,5/35,5	99->	46554826	**C733**	FISSO
1.8 16V /SW	8,5x57x29/35	99->	6064403	**C739**	MOBILE
1.9 Turbo Diesel -2.0 20v	10,2x53x29/31,5	99->	7763644	**C740**	MOBILE
2.0 20V	10,2x53x29/31,5	99-00	7763644	**C740**	MOBILE
2.4 JTD/Sportwagon	10,2x53x29/31,5	99-02	7763644	**C740**	MOBILE
1.9 JTD	10,5x80x25/30	99->	46454419	**C753**	FISSO
1.8 16V	17x65,3x29	99->	46406204	**C754**	FISSO
1.9 JTD	17x65,3x29	99->	46406204	**C754**	FISSO
1.9 JTD/Sportwagon	8,2x64,778x30/41	99-02	7778565	**C767**	
2.4 JTD/Sportwagon	8,2x64,778x30/41	99-02	7778565	**C767**	
K					
2.0 i.e. Turbo	10,5x61x30/51	94->	5997325	**C522**	FISSO
2.0 i.e.-2.4 i.e.	10,2x53x29/31,5	94->	7763644	**C740**	FISSO
2.0 i.e.Turbo 20 v-2.4 Turbo Diesel /Coupe/SW	10,2x53x29/31,5	94->	7763644	**C740**	MOBILE
2.4 JTD/Sportwagon	8,2x64,778x30/41	98-01	7778565	**C767**	
2.4 TDS/Sportwagon	8,2x64,778x30/41	94-01	7778565	**C767**	
K COUPE'					
2.0 i.e. Turbo	10,5x61x30/51	96->	5997325	**C522**	FISSO
2.0 i.e. -2.4 i.e.	10,2x53x29/31,5	99->	7763644	**C740**	FISSO
MUSA					
1.9 Multijet	10,2x53x29/31,5	04->	7763644	**C740**	MOBILE
1.9 Multijet	8,2x64,778x30/41	04->	7778565	**C767**	
NUOVA DELTA					
1.4-1.6 8v	30x57x24	93->	5972277	**C525**	FISSO
1.4-1.6 8v (Comandi vari)	20x80x23	93->	46424716	**C539/F**	FISSO
1.6 16 v (Comandi vari+c.compr.)	20x80x23	96->	46424716	**C539/F**	FISSO
1.9 Turbo Diesel (Condizionatore)	20x80x23	93->	46424716	**C539/F**	MOBILE
1.6 16 v	60x29	96->	46416489	**C732**	FISSO
1.6 16 v	12,3x65x30,5/35,5	96->	46554826	**C733**	MOBILE
1.8 16 v	10,5x60x25/46,5	92-95	7541718	**C532**	FISSO
1.8 16 v	8,5x57x29/35	93-97	60813415	**C739**	MOBILE
1.9 Turbo Diesel	10,5x61x33/57,5	93->	7596877	**C528**	FISSO
1.9 Turbo Diesel	10,5x61	93->	7596876	**C529**	MOBILE
2.0 16v - 2.0 16 v Turbo	10,5x61x30/51	92->	5997325	**C522**	FISSO

TENDICINGHIA DISTRIBUZIONE
BELT TIGHTENERS
TENDEURS DE COURROIE

follows LANCIA

MODELLO	DIMENSIONI	ANNO	RIF ORIGINALE	RIF CORAM	NOTE
PHEDRA (179)					
2.0 JTD	10x70x27/29	03->	9618888580	**C794**	
2.0 JTD (179AXB1A)	10x70x27/29	02->	9618888580	**C794**	
PRISMA					
1.3	25x60x29	79->	4385583	**C516**	FISSO
1.5-1.6	25x67x28	79->	4443703	**C515**	FISSO
1.3-1.5	25x56x29	83-85	4386575	**C517**	MOBILE
1.3-1.5-1.6	10,5x56x27/39,5	85-89	5997325	**C522**	MOBILE
1.6 i.e	10,5x60x25/48	86-89	5956109	**C523**	MOBILE
4WD	10,5x60x25/46,5	86-92	7541718	**C532**	FISSO
1.9 Turbo Diesel (Condizionatore)	20x78x27,5	89-94	7554724	**C538**	FISSO
1.3-1.5-1.6 (Condizionatore)	20x80x23	79-89	7702173	**C539**	MOBILE
THEMA					
2.0 i.e.-2.0 Turbo	10,5x56x27/39,5	89->	5997325	**C522**	MOBILE
2.0 i.e.	10,5x60x25/48	84-88	5956109	**C523**	MOBILE
2.0 8 v - '2.0 i.e Turbo	10,5x60x25/46,5	88->	7541718	**C532**	MOBILE
2.5 TD	13,5x60/70x28	84-88	7302681	**C524**	MOBILE
THESIS					
2.0 Turbo	10,2x53x29/31,5	02->	7763644	**C740**	MOBILE
2.4 JTD	10,2x53x29/31,5	02->	7763644	**C740**	MOBILE
2.4 JTD	8,2x64,778x30/41	02->	7778565	**C767**	
Y10					
1.0-1.3-1.0 Turbo	62.5x25	85->	4427068	**C505**	FISSO
1.0-1.1-4WD-1.3	30x57x24	85->	5972277	**C525**	MOBILE
Y					
1.4 12V	17x65,3x29	96->	46406204	**C754**	FISSO
1.1-1.3 8-16 V	30x57x24	96->	5972277	**C525**	MOBILE
1.4 12 V	64,5x28,7	96->	7782192	**C782**	
ZETA					
2.0 i Turbo Diesel	10x60x34/42	96->	9400830379	**C737**	PULEGGIA
2.0 i.e. Turbo	59x22/32,6	94->	96052662	**C738**	FISSO
2.0 JTD	13x60x34/42	99->	9400829629	**C742**	FISSO
2.0 JTD	10x60x34/42	99->	9400830319	**C743**	FISSO
2.0 Turbo Diesel	90x24,7/32,5	95-02	9608859180	**C768**	
2.0 Turbo	90x25	95-02	9608989980	**C785**	
2.0 16V	13x57x33/41	98-00	82932	**C781**	
2.0 16v	90x25	98-00	9608989980	**C785**	

follows LANCIA

MODELLO	DIMENSIONI	ANNO	RIF ORIGINALE	RIF CORAM	NOTE
ZETA (220)					
2.0 JTD (220AN5)	10x70x27/29	99-02	9618888580	**C794**	
2.1 TD (220AJ5)	10x70x27/29	96-99	9618888580	**C794**	
ZETA					
2.1 Turbo DS	17x60x25,5	96-99	7700102931	**C752**	MOBILE
2.1 Turbo Diesel	85x26/35,5	96-99	9607451480	**C769**	

MAZDA

121 III					
1.8 Diesel	10,3x56x24,7/27	96->	1E07-12-730	**C770**	DISTRIBUZIONE
1.8 Diesel	23X60/66X27,3/38	96->	1E07-12-720	**C771**	
1.8 Diesel	11,5X52X25,5/28,2	96->	1E07-12-700	**C772**	

MERCEDES-BENZ

190					
W201 (Comandi vari)	8,2x70/75x26,5/31,5	84-90	6012000770	**C734**	FISSO
W201 (Comandi vari)	8,2x80x25,5/31,5	84-90	6012000970	**C735**	FISSO
190D					
W201 (Comandi vari)	8,2x70/75x26,5/31,5	83-93	6012000770	**C734**	FISSO
190					
W201 2.0-2.5- 2.5 Turbo Diesel	20X42X29/30	83-93	6019810027	**C790**	
190D					
W201 2.5-2.5 Turbo Diesel (Comandi vari)	8,2x80x25,5/31,5	83-93	6012000970	**C735**	FISSO

TENDICINGHIA DISTRIBUZIONE
BELT TIGHTENERS
TENDEURS DE COURROIE

follows MERCEDES-BENZ

MODELLO	DIMENSIONI	ANNO	RIF ORIGINALE	RIF CORAM	NOTE
190E					
W201 1.8-2.0-2.3 (Comandi vari)	8,2x70/75x26,5/31,5	85-93	6012000770	**C734**	FISSO
W201 1.8-2.0-2.3 16v-2.3-2.5 16v (Comandi vari)	8,2x80x25,5/31,5	84-93	6012000970	**C735**	FISSO
200					
W124 (Comandi vari)	8,2x70/75x26,5/31,5	85-90	6012000770	**C734**	FISSO
W124 (Comandi vari)	8,2x80x25,5/31,5	85-90	6012000970	**C735**	FISSO
200 D					
W124 (Comandi vari)	8,2x80x25,5/31,5	84->	6012000970	**C735**	FISSO
W124 (Comandi vari)	8,2x80x25,5/31,5	84-95	6012000970	**C735**	FISSO
200T					
S124 (Comandi vari)	8,2x70/75x26,5/31,5	85-90	6012000770	**C734**	FISSO
S124 (Comandi vari)	8,2x80x25,5/31,5	85-90	6012000970	**C735**	FISSO
200 TD					
S124 (Comandi vari)	8,2x80x25,5/31,5	85-91	6012000970	**C735**	FISSO
200E-TE					
W124-S124 (Comandi vari)	8,2x70/75x26,5/31,5	88-92	6012000770	**C734**	FISSO
S124 (Comandi vari)	8,2x80x25,5/31,5	85-90	6012000970	**C735**	FISSO
200GE					
W460 4X4 (Comandi vari)	8,2x70/75x26,5/31,5	82-92	6012000770	**C734**	FISSO
W460-W463 4X4 (Comandi vari)	8,2x80x25,5/31,5	82-92	6012000970	**C735**	FISSO
208					
601 (Servosterzo)	8,2x70/75x26,5/31,5	89->	6012000770	**C734**	FISSO
601 (Comandi vari)	8,2x80x25,5/31,5	89->	6012000970	**C735**	FISSO
208D					
901-902 (Comandi vari)	8,2x70/75x26,5/31,5	95->	6012000770	**C734**	FISSO
901-902 (Comandi vari)	8,2x80x25,5/31,5	95->	6012000970	**C735**	FISSO

TENDICINGHIA DISTRIBUZIONE
BELT TIGHTENERS
TENDEURS DE COURROIE

follows MERCEDES-BENZ

MODELLO	DIMENSIONI	ANNO	RIF ORIGINALE	RIF CORAM	NOTE
210					
601 (Servosterzo)	8,2x70/75x26,5/31,5	89->	6012000770	**C734**	FISSO
601 (Comandi vari)	8,2x80x25,5/31,5	89->	6012000970	**C735**	FISSO
210D					
601 (Comandi vari)	8,2x70/75x26,5/31,5	88->	6012000770	**C734**	FISSO
601 (Comandi vari)	8,2x80x25,5/31,5	88->	6012000970	**C735**	FISSO
230E-CE					
W124 (Comandi vari)	8,2x70/75x26,5/31,5	87-93	6012000770	**C734**	FISSO
W124 (Comandi vari)	8,2x80x25,5/31,5	87-93	6012000970	**C735**	FISSO
230TE					
S124 (Comandi vari)	8,2x70/75x26,5/31,5	85-92	6012000770	**C734**	FISSO
S124 (Comandi vari)	8,2x80x25,5/31,5	85-92	6012000970	**C735**	FISSO
230GE					
W461 4X4 -24v 4X4 (Comandi vari)	8,2x70/75x26,5/31,5	82->	6012000770	**C734**	FISSO
W461 4X4 -24v 4X4 (Comandi vari)	8,2x80x25,5/31,5	82->	6012000970	**C735**	FISSO
250 D					
W124-Turbo Diesel (Comandi vari)	8,2x80x25,5/31,5	85->	6012000970	**C735**	FISSO
250TD					
S124 (Comandi vari)	8,2x80x25,5/31,5	89->	6012000970	**C735**	FISSO
250 GD					
W460-W461-W463 4X4 (Comandi vari+Condiz.)	8,2x80x25,5/31,5	87->	6012000970	**C735**	FISSO
W460 4X4-W461/463 4X4 (Comandi vari)	8,2x69x26/31,5	87->	6012001070	**C736**	FISSO
290 GD					
W461 24valv. 4X4-W463 4X4 (Comandi vari)	8,2x69x26/31,5	92->	6012001070	**C736**	FISSO

TENDICINGHIA DISTRIBUZIONE
BELT TIGHTENERS
TENDEURS DE COURROIE

follows MERCEDES-BENZ

MODELLO	DIMENSIONI	ANNO	RIF ORIGINALE	RIF CORAM	NOTE
300 GD					
W461-W463 4X4 (Condizionatore)	8,2x80x25,5/31,5	89->	6012000970	**C735**	FISSO
308					
602 (Servosterzo)	8,2x70/75x26,5/31,5	82->	6012000770	**C734**	FISSO
602 (Comandi vari)	8,2x80x25,5/31,5	82->	6012000970	**C735**	FISSO
308D					
903 (Comandi vari)	8,2x70/75x26,5/31,5	95->	6012000770	**C734**	FISSO
903 (Comandi vari)	8,2x80x25,5/31,5	95->	6012000970	**C735**	FISSO
310					
Servosterzo	8,2x70/75x26,5/31,5	82->	6012000770	**C734**	FISSO
Comandi vari	8,2x80x25,5/31,5	82->	6012000970	**C735**	FISSO
310D					
602 (Comandi vari)	8,2x70/75x26,5/31,5	89->	6012000770	**C734**	FISSO
602 (Comandi vari)	8,2x80x25,5/31,5	89->	6012000970	**C735**	FISSO
350 GD					
W461-W463 4X4 Turbo Diesel (Condizionatore)	8,2x80x25,5/31,5	91->	6012000970	**C735**	FISSO
400E					
W124 (Comandi vari)	8,2x70/75x26,5/31,5	92-93	6012000770	**C734**	FISSO
400SE-SEL					
W140 (Comandi vari)	8,2x70/75x26,5/31,5	91->	6012000770	**C734**	FISSO
408D					
904 (Comandi vari)	8,2x70/75x26,5/31,5	92->	6012000770	**C734**	FISSO
904 (Comandi vari)	8,2x80x25,5/31,5	82->	6012000970	**C735**	FISSO
410D					
611 (Comandi vari)	8,2x70/75x26,5/31,5	89->	6012000770	**C734**	FISSO
611 (Comandi vari)	8,2x80x25,5/31,5	89->	6012000970	**C735**	FISSO

TENDICINGHIA DISTRIBUZIONE
BELT TIGHTENERS
TENDEURS DE COURROIE

follows MERCEDES-BENZ

MODELLO	DIMENSIONI	ANNO	RIF ORIGINALE	RIF CORAM	NOTE
500E					
W124 (Comandi vari)	8,2x70/75x26,5/31,5	91-95	6012000770	**C734**	FISSO
500SL					
AMG W129 6.0 - W129-W140 (Comandi vari)	8,2x70/75x26,5/31,5	89->	6012000770	**C734**	FISSO
W129- 6.0 AMG W129 (Comandi vari)	8,2x80x25,5/31,5	89->	6012000970	**C735**	FISSO
500SE					
W140 (Comandi vari)	8,2x70/75x26,5/31,5	91->	6012000770	**C734**	FISSO
500SEC					
W140 (Comandi vari)	8,2x70/75x26,5/31,5	92->	6012000770	**C734**	FISSO
508D					
667 (Comandi vari)	8,2x70/75x26,5/31,5	82->	6012000770	**C734**	FISSO
667 (Comandi vari)	8,2x80x25,5/31,5	82->	6012000970	**C735**	FISSO
510					
667 (Servosterzo)	8,2x70/75x26,5/31,5	82->	6012000770	**C734**	FISSO
667 (Comandi vari)	8,2x80x25,5/31,5	82->	6012000970	**C735**	FISSO
C200					
Diesel W202 (Comandi vari)	8,2x80x25,5/31,5	93->	6012000970	**C735**	FISSO
Diesel W202	20X42X29/30	93-00	6019810027	**C790**	
C220					
Diesel W202 W210 (Comandi vari)	8,2x80x25,5/31,5	93->	6012000970	**C735**	FISSO
C220 T					
Diesel S202 (Comandi vari)	8,2x80x25,5/31,5	93->	6012000970	**C735**	FISSO
C250					
W202 Diesel Turbo Diesel (Comandi vari)	8,2x80x25,5/31,5	93-95	6012000970	**C735**	FISSO
C250 T					
S202 Turbo Diesel (Comandi vari)	8,2x80x25,5/31,5	96->	6012000970	**C735**	FISSO

TENDICINGHIA DISTRIBUZIONE
BELT TIGHTENERS
TENDEURS DE COURROIE

follows MERCEDES-BENZ

MODELLO	DIMENSIONI	ANNO	RIF ORIGINALE	RIF CORAM	NOTE
E200 D					
W124 (Comandi vari)	8,2x80x25,5/31,5	89-95	6012000970	**C735**	FISSO
W124	20X42X29/30	93-95	6019810027	**C790**	
E250					
W124 Turbo Diesel- W124 Diesel-W210 Diesel (Comandi vari)	8,2x80x25,5/31,5	88->	6012000970	**C735**	FISSO
E250 DT					
W210T (Comandi vari)	8,2x80x25,5/31,5	96->	6012000970	**C735**	FISSO
E300					
W124 Turbo Diesel	20X42X29/30	93-95	6019810027	**C790**	
E300 T					
S124 Turbo Diesel Station wagon	20X42X29/30	93-96	6019810027	**C790**	
E420					
W210 (Comandi vari)	8,2x70/75x26,5/31,5	96->	6012000770	**C734**	FISSO
W124 (Comandi vari)	8,2x70/75x26,5/31,5	93-95	6012000770	**C734**	FISSO
E420					
BM980-W210 (Comandi vari)	8,2x69x26/31,5	96->	6012001070	**C736**	FISSO
E420 T					
BM980-W210 T (Comandi vari)	8,2x69x26/31,5	96->	6012001070	**C736**	FISSO
E500					
W124 (Comandi vari)	8,2x70/75x26,5/31,5	91-95	6012000770	**C734**	FISSO
G250					
250 GD W460-W463	20X42X29/30	87->	6019810027	**C790**	

TENDICINGHIA DISTRIBUZIONE
BELT TIGHTENERS
TENDEURS DE COURROIE

follows MERCEDES-BENZ

MODELLO	DIMENSIONI	ANNO	RIF ORIGINALE	RIF CORAM	NOTE
G290					
290 GD/G 290D	20X42X29/30	92->	6019810027	**C790**	
G300					
300 GD W460-W463	20X42X29/30	79->	6019810027	**C790**	
CABRIO 300 GD W463	20X42X29/30	90-97	6019810027	**C790**	
G350					
350 G Turbo Diesel W463	20X42X29/30	91->	6019810027	**C790**	
CABRIO 350 G Turbo Diesel W463	20X42X29/30	90-97	6019810027	**C790**	
KOMBI					
200T S124	20X42X29/30	85-91	6019810027	**C790**	
250T S124	20X42X29/30	85-93	6019810027	**C790**	
300T S124 Diesel/Turbo Diesel/Turbo Diesel 4-matic	20X42X29/30	86-93	6019810027	**C790**	
S240					
BM980-W140 (Comandi vari)	8,2x69x26/31,5	91->	6012001070	**C736**	FISSO
S350					
W140 Turbo Diesel	20X42X29/30	93-98	6019810027	**C790**	
S400					
W140 (Comandi vari)	8,2x70/75x26,5/31,5	91->	6012000770	**C734**	FISSO
S400L					
W140 (Comandi vari)	8,2x70/75x26,5/31,5	91->	6012000770	**C734**	FISSO
S420					
W140 (Comandi vari)	8,2x70/75x26,5/31,5	91->	6012000770	**C734**	FISSO
S500					
W140 (Comandi vari)	8,2x70/75x26,5/31,5	91->	6012000770	**C734**	FISSO
BM980-W140 (Comandi vari)	8,2x69x26/31,5	93->	6012001070	**C736**	FISSO

follows MERCEDES-BENZ

MODELLO	DIMENSIONI	ANNO	RIF ORIGINALE	RIF CORAM	NOTE
S500L					
W140 (Comandi vari)	8,2x70/75x26,5/31,5	91->	6012000770	**C734**	FISSO
S500 Coupé					
W140 (Comandi vari)	8,2x70/75x26,5/31,5	92->	6012000770	**C734**	FISSO
S600					
W140 (Comandi vari)	8,2x69x26/31,5	93->	6012001070	**C736**	FISSO
SL500					
W129 (Comandi vari)	8,2x70/75x26,5/31,5	89->	6012000770	**C734**	FISSO
BM980-R129 (Comandi vari)	8,2x69x26/31,5	92->	6012001070	**C736**	FISSO
SL600					
R129 (Comandi vari)	8,2x69x26/31,5	92->	6012001070	**C736**	FISSO
T1 Autobus					
208 D 2.3 - 210 D 2.8 (601)	20X42X29/30	88-96	6019810027	**C790**	
308 D 2.3 -310 D 2.9 (602)	20X42X29/30	89-96	6019810027	**C790**	
T1 Furgonato					
208 D 2.3 - 210 D 2.8 (601)	20X42X29/30	88-96	6019810027	**C790**	
308 D 2.3 -310 D 2.9 (602)	20X42X29/30	89-96	6019810027	**C790**	
T1 Pianale piatto/Telaio					
208 D 2.3 - 210 D 2.8 (601)	20X42X29/30	88-96	6019810027	**C790**	
308 D 2.3 -310 D 2.9 (602)	20X42X29/30	89-96	6019810027	**C790**	
T1/TN					
408 D	20X42X29/30	88-95	6019810027	**C790**	
T2/LN1					
508 D	20X42X29/30	89-94	6019810027	**C790**	

TENDICINGHIA DISTRIBUZIONE
BELT TIGHTENERS
TENDEURS DE COURROIE

follows MERCEDES-BENZ

MODELLO	DIMENSIONI	ANNO	RIF ORIGINALE	RIF CORAM	NOTE
TE					
200 D (W124)	20X42X29/30	84-93	6019810027	**C790**	
250 D - 250 Turbo Diesel (W124)	20X42X29/30	85-93	6019810027	**C790**	
300 D (W124)	20X42X29/30	84-93	6019810027	**C790**	
300 D 4-matic-300 Turbo D-300 Turbo D 4-matic (W124)	20X42X29/30	86-93	6019810027	**C790**	
PUCH G-MODEL					
250 GD (W460)	20X42X29/30	87-92	6019810027	**C790**	
290 GD/G 290 D (W461)	20X42X29/30	92->	6019810027	**C790**	
300 GD (W463)	20X42X29/30	89->	6019810027	**C790**	
350 G Turbo Diesel (W463)	20X42X29/30	91->	6019810027	**C790**	
MITSUBISHI					
CARISMA					
1.9 TD	17x60x25,5	96-99	7700102931	**C752**	MOBILE
MOSKOVICH					
2141					
1.8 DS	10,3x56x24,7/27	90->	1005823	**C770**	DISTRIBUZIONE
1.8 DS	23X60/66X27,3/38	90->	6177882	**C771**	
NISSAN					
MICRA					
1.5 Diesel	10x60x34/42	97->	9400830379	**C737**	PULEGGIA
INTERSTAR					
Autobus dCi 120-80-90	17x60x25,5	02->	7700102931	**C752**	MOBILE
Furgonato dCi 120-80-90	17x60x25,5	02->	7700102931	**C752**	MOBILE
PRIMASTAR					
2.0 Autobus/ dCi 100-80	17x60x25,5	01->	7700102931	**C752**	MOBILE
Furgonato dCi 100-80	17x60x25,5	02->	7700102931	**C752**	MOBILE

TENDICINGHIA DISTRIBUZIONE
BELT TIGHTENERS
TENDEURS DE COURROIE

OPEL

MODELLO	DIMENSIONI	ANNO	RIF ORIGINALE	RIF CORAM	NOTE
ARENA					
1.9 DS	10,2x59x31/32,8	98-01	4402639	**C751**	MOBILE
ASCONA C					
1.6 D (81_,86_,87_,88_)	61/71,5x31/58,5	82-88	636422	**C809**	
1.6 D (81_,86_,87_,88_)	20x69/80,5x31/59	82-88	636421	**C810**	
1.6 D 2 volumi/coda spiovente	61/71,5x31/58,5	82-77	636422	**C809**	
1.6 D 2 volumi/coda spiovente	20x69/80,5x31/59	82-88	636421	**C810**	
ASTRA					
1.4-1.6	8x59x19	92-98	636749	**C746**	MOBILE
1.4-1.6-1.8 (XE,XEL,E)	59x22	92->	636725	**C750**	MOBILE
1.6 (C1.6XE)	59x22	93-98	636725	**C750**	FISSO INF.
1.4-1.6-1.8 (XE,XEL,E)	8x63/69x25,5	92->	5636426	**C748**	FISSO SUP.
1.4-1.6-1.8 (XE,XEL,E)	8x52,5/59x25;5	92->	5636427	**C749**	MOBILE
ASTRA F					
1.7 D	61/71,5x31/58,5	92-92	636422	**C809**	
1.7 D 2 volumi	61/71,5x31/58,5	91-92	636422	**C809**	
1.7 D Station Wagon	61/71,5x31/58,5	91-92	636422	**C809**	
1.7 D Van	61/71,5x31/58,5	91-92	636422	**C809**	
ASTRA H					
1.9 Familiare	10,2x53x29/31,5	04->	5636743	**C740**	MOBILE
ASTRA (F)					
1.6i 16V	8x63/69x25,5	94-98	5636426	**C748**	PULEGGIA
1.6i 16V Classic	8x63/69x25,5	98->	5636426	**C748**	PULEGGIA
	8x63/69x25,5	96-01	5636426	**C748**	PULEGGIA
1.4i 16V	8x52,5/59x25,5	96-01	5636427	**C749**	FISSO
1.6i 16V	8x52,5/59x25,5	94-98	5636427	**C749**	FISSO
1.6i 16V Classic	8x52,5/59x25,5	98->	5636427	**C749**	TEND.
1.4i 16V	59x22	96-01	636725	**C750**	PULEGGIA
1.6i 16V	59x22	94-98	636725	**C750**	PULEGGIA
1.6i 16V Classic	59x22	98->	636725	**C750**	PULEGGIA
1.4	8,2x80x26,5/30,4	92-98	1340535	**C758**	MOBILE
1.6	8,2x80x26,5/30,4	92-98	1340535	**C758**	TEND.
1.6	8,2x80x26,5/30,4	98->	1340535	**C758**	TEND.
1.4-1.6-1.8(Organi Aux)	17x76x22	92->	90571758	**C760**	FISSO
1.7 TD - 1.7 DTL (condizionatore)	17x70x19	92-98	90530547	**C761**	TEND.
1.7 Diesel	59x26/33,5	92-98	5636738	**C775**	
1.7 Diesel Coda spiovente	59x26/33,5	92-98	5636738	**C775**	
1.7 Diesel/Turbo Diesel Van	59x26/33,5	92-99	5636738	**C775**	

TENDICINGHIA DISTRIBUZIONE
BELT TIGHTENERS
TENDEURS DE COURROIE

follows OPEL

MODELLO	DIMENSIONI	ANNO	RIF ORIGINALE	RIF CORAM	NOTE
ASTRA (F)					
1.7 Diesel/Turbo Diesel 1.8 i/ 2.0i Familiare	59x26/33,5	92-98	5636738	**C775**	
1.7 TDS	59x26/33,5	92-98	5636738	**C775**	
1.7 Turbo Diesel	59x26/33,5	94-98	5636738	**C775**	
1.8 i 16 V	59x26/33,5	93-98	5636738	**C775**	
1.8 i 16vl Coda spiovente	59x26/33,5	93-98	5636738	**C775**	
2.0 16 V	59x26/33,5	95-98	5636738	**C775**	
2.0 i 16 v / 2.0 GSI 16v	59x26/33,5	91-98	5636738	**C775**	
Cabriolet 1.8 i 16V	59x26/33,5	94-01	5636738	**C775**	
1.8 i 16 V Cabriolet	8x52/58x29,5	94-01	5636425	**C776**	
1.8 i 16 V Coda spiovente	8x52/58x29,5	93-98	5636425	**C776**	
1.8 i 16 V/Familiare	8x52/58x29,5	93-98	5636425	**C776**	
2.0 GSI 16 V	8x52/58x29,5	91-98	5636425	**C776**	
2.0 i 16 V	8x52/58x29,5	95-98	5636425	**C776**	
2.0 i 16V/Familiare	8x52/58x29,5	95-98	5636425	**C776**	
2.0 i 16V/Familiare/2.0 GSI 16 V	8x63/69x29,5	91-98	636416	**C777**	
ASTRA (G)					
1.4 16V	8x63/69x25,5	98->	5636426	**C748**	PULEGGIA
1.6 16V	8x63/69x25.5	98->	5636426	**C748**	PULEGGIA
1.6 16V Cabrio	8x63/69x25,5	01->	5636426	**C748**	PULEGGIA
1.8 16V	8x63/69x25,5	98->	5636426	**C748**	PULEGGIA
1.8 16V Cabrio	8x63/69x25,5	01->	5636426	**C748**	PULEGGIA
1.4 16V	8x52,5/59x25,5	98->	5636427	**C749**	TEND.
1.6 16V	8x52,5/59x25,5	98->	5636427	**C749**	TEND.
1.6 16V Cabrio	8x52,5/59x25,5	01->	5636427	**C749**	TEND.
1.8 16V	8x52,5/59x25,5	98->	5636427	**C749**	TEND.
1.8 16V Cabrio	8x63/69x25,5	01->	5636427	**C749**	MOBILE
1.4 16V	59x22	98->	636725	**C750**	PULEGGIA
1.6 16V	59x22	98->	636725	**C750**	PULEGGIA
1.6 16V Cabrio	59x22	01->	636725	**C750**	PULEGGIA
1.8 16V	59x22	98->	636725	**C750**	PULEGGIA
1.8 16V Cabrio	59x22	01->	636725	**C750**	PULEGGIA
1.7 Turbo Diesel / Diesel / 2.0 16V /Familiare	59x26/33,5	98-00	5636738	**C775**	
2.0 16v Coda spiovente/Familiare	59x26/33,5	98->	5636738	**C775**	
CALIBRA					
2.0 i 16V/ 4X4 / TURBO	59x26/33,5	90-97	5636738	**C775**	
2.0 i 16V/4x4	8x52/58x29,5	90-97	5636425	**C776**	
2.0 i Turbo 4x4	8x52/58x29,5	90-97	5636425	**C776**	
2.0 i 16V/ 4X4 / TURBO	8x63/69x29,5	90-97	636416	**C777**	

TENDICINGHIA DISTRIBUZIONE
BELT TIGHTENERS
TENDEURS DE COURROIE

follows OPEL

MODELLO	DIMENSIONI	ANNO	RIF ORIGINALE	RIF CORAM	NOTE
CORSA					
1.2-1.4	17x70x26	89-93	1340533	**C757**	MOBILE
1.2-1.4	8x59x19	93->	636749	**C746**	FISSO
1.4	8,2x80x26,5x30,4	->94	1340535	**C758**	MOBILE
1.4-1.6 (X1.4E, C1.6SEZ, C1.6XE, X1.6XE)	59x22	94->	636725	**C750**	FISSO INF.
1.4-1.6 (X1.4E, C1.6SEZ, C1.6XE, X1.6XE)	8x63/69x25,5	92->	5636426	**C748**	FISSO SUP.
1.4-1.6 (X1.4E, C1.6SEZ, C1.6XE, X1.6XE)	8x52,5/59x25;5	92->	5636427	**C749**	MOBILE
1.5 T.D - 1.6 16v	59x22	83-92	636725	**C750**	MOBILE
1.6-1.6 GSI	17x70x26	89-93	1340541	**C757**	MOBILE
Organi Ausiliari	17x76x22	92->	90571758	**C760**	FISSO
CORSA (B)					
1.2-1.4-1.5-1.6	8,2x80x26,5/30.4	94->	1340535	**C758**	MOBILE
1.4 16V - 1.4i 16V	17x70x26	94-00	1340554	**C757**	TEND.
1.4 16V - 1.4i 16V	59x22	94-00	636725	**C750**	PULEGGIA
1.4 16V - 1.4i 16V	8x63/69x25,5	94-00	5636426	**C748**	PULEGGIA
1.4 16V - 1.4i 16V	8x52,5/59x25,5	94-00	5636427	**C749**	MOBILE
1.6 GSI 16V	17x70x26	93-00	1340533	**C757**	TEND.
1.6 GSI 16V	59x22	93-00	636725	**C750**	PULEGGIA
1.6 GSI 16V	8x63/69x25,5	93-00	5636426	**C748**	PULEGGIA
1.6 GSI 16V	8x52,5/59x25,5	93-00	5636427	**C749**	TEND.
1.6 16V - 1.6i 16V	59x22	94-00	636725	**C750**	PULEGGIA
1.6 16V - 1.6i 16V	8x63/69x25,5	94-00	5636426	**C748**	PULEGGIA
1.6 16V - 1.6i 16V	8x52,5/59x25,5	94-00	5636427	**C749**	FISSO
1.7 DS-1.7D	8,2x80x26,5/30,4	96->	1340535	**C758**	TEND.
CORSA C					
1.4 16V	59x22	00->	636725	**C750**	PULEGGIA
1.4 16V	8x63/69x25,5	00->	5636426	**C748**	PULEGGIA
1.4 16V	8x52,5/59x25,5	00->	5636427	**C749**	TEND.
1.8 16V	59x22	00->	636725	**C750**	PULEGGIA
1.8 16V	8x63/69x25,5	00->	5636426	**C748**	PULEGGIA
1.8 16V	8x52,5/59x25,5	00->	5636427	**C749**	MOBILE
FRONTERA A					
2.2 i	59x26/33,5	95-98	5636738	**C775**	
2.2 i	8x52/58x29,5	95-98	5636425	**C776**	
FRONTERA B					
2.2 i	8x52/58x29,5	98->	5636425	**C776**	

TENDICINGHIA DISTRIBUZIONE
BELT TIGHTENERS
TENDEURS DE COURROIE

follows OPEL

MODELLO	DIMENSIONI	ANNO	RIF ORIGINALE	RIF CORAM	NOTE
KADETT					
1.4-1.6	8x59x19	86->	636749	**C746**	PULEGGIA
1.7 Diesel	59x26/33,5	92-94	5636738	**C775**	
2.0 GSI 16V	59x26/33,5	88-91	5636738	**C775**	
2.0 GSI 16V	8x52/58x29,5	88-91	5636425	**C776**	
2.0 GSI 16V	8x63/69x29,5	88-91	636416	**C777**	
KADETT D					
1.6 D - 1.6 D Station Wagon	20x69/80,5x31/59	82-84	636421	**C810**	
KADETT E					
1.6 D - 1.6 D 2 volumi/coda spiovente	61/71,5x31/58,5	84-89	636422	**C809**	
1.6 D - 1.6 D 2 volumi/coda spiovente	20x69/80,5x31/59	84-89	636421	**C810**	
1.6 D Station Wagon	61/71,5x31/58,5	84-89	636422	**C809**	
1.6 D Station Wagon	20x69/80,5x31/59	84-89	636421	**C810**	
1.6 D Furgonato	61/71,5x31/58,5	84-88	636422	**C809**	
1.6 D Furgonato	20x69/80,5x31/59	84-88	636421	**C810**	
1.6 D Combo	61/71,5x31/58,5	86-89	636422	**C809**	
1.6 D Combo	20x69/80,5x31/59	86-89	636421	**C810**	
1.7 D	61/71,5x31/58,5	89-91	636422	**C809**	
1.7 D 2 volumi/coda spiovente	61/71,5x31/58,5	89-91	636422	**C809**	
1.7 D Station Wagon	61/71,5x31/58,5	89-91	636422	**C809**	
1.7 D Furgonato	61/71,5x31/58,5	88-92	636422	**C809**	
1.7 D Combo	61/71,5x31/58,5	89-94	636422	**C809**	
MOVANO					
1.9 DTI	10,2x59x31/32,8	00->	4402639	**C751**	PULEGGIA
2.2 DTI Ribaltabile	17x60x25,5	00->	4506194	**C752**	PULEGGIA
2.2 /2.5 DTI Pianale Piatto	17x60x25,5	00->	4506194	**C752**	PULEGGIA
2.2 DTI / Furgonato	17x60x25,5	00->	4506194	**C752**	PULEGGIA
2.5 DTI / Furgonato	17x60x25,5	01->	4506194	**C752**	FISSO
2.2 DTI/2.5 DTI Combi	17x60x25,5	00->	4506194	**C752**	
OMEGA					
2.6	8,2x80x26,5/30,4	90-93	1340535	**C758**	FISSO
3.0	8,2x80x26,5/30,4	87-93	1340535	**C758**	FISSO
B 2.0 16v	59x26/33,5	94-99	5636738	**C775**	
B 2.0 16v/Familiare	8x52/58x29,5	94-99	5636425	**C776**	
B 2.2 16v	8x52/58x29,5	99-03	5636425	**C776**	
SENATOR					
3.0	8,2x80x26,5/30,4	88-94	1340535	**C758**	MOBILE

TENDICINGHIA DISTRIBUZIONE
BELT TIGHTENERS
TENDEURS DE COURROIE

follows OPEL

MODELLO	DIMENSIONI	ANNO	RIF ORIGINALE	RIF CORAM	NOTE
SINTRA					
2.2 i 16 v	59x26/33,5	96-99	5636738	**C775**	
2.2 i 16 v	8x52/58x29,5	96-99	5636425	**C776**	
SIGNUM					
1.9 CDTI	10,2x53x29/31,5	04->	93178807	**C740**	MOBILE
1.9 CDTI	8,2x64,778x30/41	04->	5636456	**C767**	
TIGRA					
1.4	8x59x19	88->	636749	**C746**	MOBILE
1.4-1.6I (X1.4XE, C1.6XE, X1.6XE)	59x22	94->	636725	**C750**	FISSO INF.
1.4-1.6I (X1.4XE, C1.6XE, X1.6XE)	8x63/69x25,5	94->	5636426	**C748**	FISSO SUP.
1.4-1.6I (X1.4XE, C1.6XE, X1.6XE)	8x52,5/59x25;5	94->	5636427	**C749**	FISSO INF.
1.4 16v - 1.6 16v	8x63/69x25,5	94->	5636426	**C748**	FISSO SUP.
1.4 16v - 1.6 16v	8x52,5/59x25;5	94->	5636427	**C749**	FISSO
1.4 16v - 1.6 16v	8,2x80x26,5/30,4	94->	1340535	**C758**	MOBILE
1.4 16v - 1.6 16v	17x70x26	94->	1340533	**C757**	TEND.
1.4 16v - 1.6 16v	59x22	94->	636725	**C750**	MOBILE
VECTRA					
1.4-1.6	8x59x19	88->	636749	**C746**	MOBILE
Organi Ausiliari	17x76x22	92->	90571758	**C760**	TEND.
1.7 TD - 1.7 DTL (Condizionatore)	17x70x19	90->	90530547	**C761**	MOBILE
VECTRA A					
1.7 D	61/71,5x31/58,5	88-92	636422	**C809**	
1.7 D 2volumi/Coda spiovente	61/71,5x31/58,5	88-92	636422	**C809**	
1.7 D	59x26/33,5	92-95	5636738	**C775**	
1.7 D Coda spiovente	59x26/33,5	92-95	5636738	**C775**	
2.0 i 16V	59x26/33,5	90-95	5636738	**C775**	
2.0 i 16v / 4X4	59x26/33,5	94-95	5636738	**C775**	
2.0 i 16V Coda spiovente	59x26/33,5	95-00	5636738	**C775**	
2.0 i Turbo 4X4	59x26/33,5	94-95	5636738	**C775**	
2000 GT 16V/ 4x4	59x26/33,5	89-95	5636738	**C775**	
2.0 i 16V/ 4x4/ Turbo 4x4/ Coda spiovente	8x52/58x29,5	94-95	5636425	**C776**	
2000 GT 16V/ 4x4	8x52/58x29,5	90-95	5636425	**C776**	
2.0 i Turbo 4X4	8x63/69x29,5	94-95	636416	**C777**	
2.0 i 16 V / 2000/GT 16 V 4x4	8x63/69x29,5	89-95	636416	**C777**	
2000 16V 4x4/ GT 16 V	8x63/69x29,5	89-94	636416	**C777**	

TENDICINGHIA DISTRIBUZIONE
BELT TIGHTENERS
TENDEURS DE COURROIE

follows OPEL

MODELLO	DIMENSIONI	ANNO	RIF ORIGINALE	RIF CORAM	NOTE
VECTRA (B)					
1.6 (X1.6XEL) 16V	8x63/69x25,5	95->	5636426	**C748**	FISSO SUP.
1.8 16V	8x63/69x25,5	95->	5636426	**C748**	PULEGGIA
1.6 (X1.6XEL) 16V	8x52,5/59x25;5	95->	5636427	**C749**	MOBILE
1.8 16V	8x52,5/59x25,5	95->	5636427	**C749**	TEND.
1.6 (X1.6XEL) 16V	59x22	95->	636725	**C750**	FISSO INF.
1.8 16V	59x22	95->	636725	**C750**	PULEGGIA
1.8 i 16V Coda spiovente	59x26/33,5	95-00	5636738	**C775**	
1.8 i 16V Familiare / 2.0 i 16 V Familiare	59x26/33,5	96-00	5636738	**C775**	
1.8 i 16 V/ 2.0 i 16 V/ Coda spiovente/Familiare	8x52/58x29,5	95-00	5636425	**C776**	
2.2 i 16V	8x52/58x29,5	00->	5636425	**C776**	
VECTRA (C)					
1.9 CDTI	10,2x53x29/31,5	04->	5636743	**C740**	MOBILE
1.9 CDTI	8,2x64,778x30/41	04->	93181966	**C767**	
VIVARO Combi					
2.0 16V	17x60x25,5	01->	4410595	**C752**	
VIVARO Furgonato					
2.0 16V	17x60x25,5	01->	4410595	**C752**	
ZAFIRA					
1.6 16V	59x22	99->	636725	**C750**	PULEGGIA
1.6 16V	8x63/69x25,5	99->	5636426	**C748**	PULEGGIA
1.6 16V	8x52,5/59x25,5	99->	5636427	**C749**	TEND.
1.8 16V	59x22	99->	636725	**C750**	PULEGGIA
1.8 16V	8x63/69x25,5	99->	5636426	**C748**	PULEGGIA
1.8 16V	8x52,5/59x25,5	99->	5636427	**C749**	MOBILE

TENDICINGHIA DISTRIBUZIONE
BELT TIGHTENERS
TENDEURS DE COURROIE

PEUGEOT

MODELLO	DIMENSIONI	ANNO	RIF ORIGINALE	RIF CORAM	NOTE
106					
1.0-1.1-1.3-1.4	13x59x22/33	92->	0829.19	**C604**	MOBILE
1.4i-1.6i	13x59x22/33	94->	0829.19	**C604**	MOBILE
106 I (1A, 1C)					
1.0 - 1.1	65x26,5/59	91-96	6453.S5	**C796**	
1.3	65x26,5/59	93-96	6453.S5	**C796**	
1.4 - 1.4 D	65x26,5/59	91-96	6453.S5	**C796**	
1.5 D - 1.6	65x26,5/59	93-96	6453.S5	**C796**	
106 II (1)					
1.1 i	60x25	96->	9642929880	**C793**	
1.4 i	60x25	96->	9642929880	**C793**	
1.0 i - 1.1 i - 1.4 i - 1.6 i - 1.6 S16	65x26,5/59	96->	6453.S5	**C796**	
205					
1.0-1.1-1.3-1.4-1.4i	13x59x22/33	88->	0829.19	**C604**	MOBILE
1.6-1.6i-1.9	57x24	83-94	0829.12	**C603**	MOBILE
1.6-1.6i-1.9	59x22/32,6	83-98	96052662	**C738**	MOBILE
1.6-1.9	57x24	83-91	0829.19	**C604**	MOBILE
1.8 Diesel/Turbo Diesel 1.9 Diesel	60x34	83-93	0829.11	**C600**	FISSO
1.8 Diesel/Turbo Diesel 1.9 Diesel	60x34	83-93	0829.02	**C601**	MOBILE
1.8 Diesel/Turbo Diesel- 1.9 Diesel	60x34	94->	0829.33	**C545**	FISSO
1.8 Diesel/Turbo Diesel 1.9 Diesel	60x34	94->	0830.13	**C546**	MOBILE
205 I Cabriolet (741B,20D)					
1.1 CJ	65x26,5/59	89-94	6453.S5	**C796**	
1.4 CJ	65x26,5/59	89-94	6453.S5	**C796**	
205 II (20A/C)					
1.0	65x26,5/59	87-98	6453.S5	**C796**	
1.1	65x26,5/59	87-98	6453.S5	**C796**	
1.3 Rallye	65x26,5/59	87-90	6453.S5	**C796**	
1.4	65x26,5/59	87-98	6453.S5	**C796**	
1.4 Cat.	65x26,5/59	89-93	6453.S5	**C796**	
206					
1.1-1.4i	13x59x22/33	98->	0829.19	**C604**	MOBILE
1.1 i - 1.4 i	60x25	98->	9642929880	**C793**	
1.6i	13x59x22/33	93->	0829.19	**C604**	MOBILE
1.9 Diesel	13x60x34/42	98->	0829.62	**C742**	FISSO
1.9 Diesel	10x60x34/42	98->	0830.31	**C743**	PULEGGIA
1.9 DS/Diesel	17x60x25,5	98-01	7700102931	**C752**	MOBILE

TENDICINGHIA DISTRIBUZIONE
BELT TIGHTENERS
TENDEURS DE COURROIE

follows PEUGEOT

MODELLO	DIMENSIONI	ANNO	RIF ORIGINALE	RIF CORAM	NOTE
206 (2A/C)					
1.9 D	10x70x27/29	98-01	95577787	**C794**	
206					
2.0 HDI	17x60x25,5	99-02	7700102931	**C752**	MOBILE
206 (2A/C)					
2.0 HDI 90	10x70x27/29	99->	95577787	**C794**	
206 SW (2E/K)					
1.1 - 1.4	60x25	02->	9642929880	**C793**	
2.0 HDI	10x70x27/29	02->	95577787	**C794**	
207					
1.4	60x25	06->	9642929880		
305					
1.6-1.9	57x24	83-94	0829.12	**C603**	MOBILE
1.7-1.8-1.9 Diesel	60x34	83-93	0829.11	**C600**	FISSO
1.7-1.8-1.9 Diesel	60x34	83-93	0829.11	**C601**	MOBILE
1.7-1.9 Diesel	60x34	94->	0829.33	**C545**	FISSO
1.7-1.9 Diesel	60x34	94->	0830.13	**C546**	
306					
1.1i-1.4-1.4i-1.6i	13x59x22/33	93->	0829.19	**C604**	MOBILE
306 (7B,N3,N5)					
1.1 - 1.4 SL	65x26,5/59	94->	6453.S5	**C796**	
306					
1.4 SL	60x25	94->	9642929880	**C793**	
306 (7B,N3,N5)					
1.6 SR	65x26,5/59	94-00	6453.S5	**C796**	

follows PEUGEOT

MODELLO	DIMENSIONI	ANNO	RIF ORIGINALE	RIF CORAM	NOTE
306					
1.8 Diesel-1.9 Diesel-Turbo Diesel	60x34	94->	0829.33	**C545**	MOBILE
1.8 Diesel-1.9 Diesel-Turbo Diesel	60x34	94->	0830.13	**C546**	FISSO
1.8 Diesel-'1.9 Diesel-Turbo Diesel	60x34	->93	0829.11	**C600**	MOBILE
1.8 Diesel-'1.9 Diesel-Turbo Diesel	60x34	->93	0830.02	**C601**	FISSO
1.8i-2.0i 8Valv.	59x22/32,6	83-98	96052662	**C738**	MOBILE
1.8 DS/Coda spiovente	17x60x25,5	98->	7700102931	**C752**	PULEGGIA
1.8 16v /ST	90x24,7/32,5	94-97	575118	**C768**	
1.8 16V Coda Spiovente	90x24,7/32,5	97->	575118	**C768**	
1.8 Coda Spiovente	90x24,7/32,5	93->	575118	**C768**	
1.8 Diesel Coda spiovente	85x26/35,5	93->	96074514	**C769**	
1.8 16v/ 2.0/ Coda spiovente	13x57x33/41	97->	82932	**C781**	
1.8 16v / 2.0/ Coda spiovente	90x25	97->	575120	**C785**	
1.8 ST	90x25	94->	575120	**C785**	
1.9 Diesel - 2.0 Turbo Diesel HDI	13x60x34/42	98->	0829.62	**C742**	MOBILE
1.9 Diesel - 2.0 Turbo Diesel HDI	10x60x34/42	98->	0830.31	**C743**	FISSO
1.9 DS/Diesel/Coda spiovente	17x60x25,5	93->	7700102931	**C752**	PULEGGIA
1.9 Turbo DS/SLD/SRDT	17x60x25,5	94->	7700102931	**C752**	PULEGGIA
1.9 D/ DT HDI Coda Spiovente	85x26/35,5	93-99	575118	**C769**	
1.9 Diesel	85x26/35,5	98->	96074514	**C769**	
1.9 SLD /SRDT	85x26/35,5	94->	96074514	**C769**	
1.9 SLD	10x70x27/29	94->	95577787	**C794**	
1.9 SRDT	10x70x27/29	94->	95577787	**C794**	
1.9 D	10x70x27/29	98->	95577787	**C794**	
2.0 HDI	17x60x25,5	99->	7700102931	**C752**	PULEGGIA
2.0 HDI / Coda spiovente	17x60x25,5	99->	7700102931	**C752**	PULEGGIA
2.0 16V Coda Spiovente /s16/Xsi	90x24,7/32,5	93->	575118	**C768**	
2.0/ S16 / ST	90x24,7/32,5	94-97	575118	**C768**	
2.0 HDI	85x26/35,5	99->	96074514	**C769**	
2.0i 16v	10x60x34/42	96->	9400830379	**C737**	FISSO
2.0 HDI 90	10x70x27/29	99->	95577787	**C794**	
306 2 volumi					
1.1 - 1.4 (7A,7C,N3,N5)	65x26,5/59	93->	6453.S5	**C796**	
1.4	60x25	93->	9642929880	**C793**	
1.6 (7A,7C,N3,N5)	65x26,5/59	93-00	6453.S5	**C796**	
1.8 D (7A,7C,N3,N5)	10x70x27/29	93->	95577787	**C794**	
1.9 D (7A,7C,N3,N5)	10x70x27/29	93->	95577787	**C794**	
1.9 DT (7A,7C,N3,N5)	10x70x27/29	93->	95577787	**C794**	
2.0 HDI 90 (7A,7C,N3,N5)	10x70x27/29	99->	95577787	**C794**	
306 BREAK					
1.4	60x25	97->	9642929880	**C793**	
1.4 (7E,N3,N5)	65x26,5/59	97->	6453.S5	**C796**	
1.6 (7E,N3,N5)	65x26,5/59	97-00	6453.S5	**C796**	
1.8 16 V/2.0	13x57x33/41	97->	82932	**C781**	
1.8 / 1.8 16v/ 2.0	90x25	97->	575120	**C785**	
1.8/1.8 16v/2.0	90x24,7/32,5	97->	575118	**C768**	
1.9 Diesel/TD	17x60x25,5	97-98	7700102931	**C752**	PULEGGIA
1.9 Diesel/TD	85x26/35,5	97-98	575118	**C769**	
1.9 D	10x70x27/29	97->	95577787	**C794**	
1.9 TD	10x70x27/29	97->	95577787	**C794**	
2.0 HDI	85x26/35,5	99->	575118	**C769**	
2.0 HDI 90	10x70x27/29	99->	95577787	**C794**	

TENDICINGHIA DISTRIBUZIONE
BELT TIGHTENERS
TENDEURS DE COURROIE

follows PEUGEOT

MODELLO	DIMENSIONI	ANNO	RIF ORIGINALE	RIF CORAM	NOTE
306 CABRIOLET					
1.6 (7D,N3,N5)	65x26,5/59	96-00	6453.S5	**C796**	
1.8	90x25	94->	575120	**C785**	
1.8/ 2.0	90x24,7/32,5	94	575118	**C768**	
1.8 16v/ 2.0 16v	13x57x33/41	97->	82932	**C781**	
1.8 16v	90x25	00->	575120	**C785**	
2.0 16v	90x24,7/32,5	97	575118	**C768**	
2.0 16v	90x25	97->	575120	**C785**	
307 (3A/C)					
1.4	60x25	00->	9642929880	**C793**	
2.0 HDI 90	10x70x27/29	00->	95577787	**C794**	
307 SW (3H)					
2.0 HDI 90	10x70x27/29	02->	95577787	**C794**	
309					
1.1-1.3	13x59x22/33	85-94	0829.19	**C604**	MOBILE
1.6-1.9	57x24	85-92	0829.12	**C603**	MOBILE
1.6-1.9	59x22/32,6	92->	96052662	**C738**	MOBILE
1.7 Diesel-1.8 Diesel TurboDiesel- 1.9 Diesel	60x34	86-94	0829.11	**C600**	MOBILE
1.7 Diesel-1.8 Diesel TurboDiesel- 1.9 Diesel	60x34	86-94	0830.02	**C601**	FISSO
1.7 Diesel- 1.9 Turbo Diesel	60x34	94->	0829.33	**C545**	MOBILE
1.7 Diesel- 1.9 Turbo Diesel	60x34	94->	0830.13	**C546**	FISSO
309 I (10C, 10A)					
1.4	65x26,5/59	89-89	6453.S5	**C796**	
309 II (3C,3A)					
1.1 - 1.4	65x26,5/59	89-93	6453.S5	**C796**	
405					
1.4-1.4i	13x59x22/33	87->	0829.19	**C604**	MOBILE
1.6/1.8/2.0 X4/2.0 MI 16/ 2.0 T16 X4	90x24,7/32,5	92-95	575118	**C768**	
1.6-1.6i-1.8-1.9-1.9i-2.0i	59x22/32,6	88->	96052662	**C738**	MOBILE
1.6-1.9	57x24	87-92	0829.12	**C603**	MOBILE
1.7 Diesel-1.8 Diesel TurboDiesel- 1.9 Diesel	60x34	83-93	0829.11	**C600**	MOBILE
1.7 Diesel-1.8 Diesel TurboDiesel- 1.9 Diesel	60x34	83-93	0830.02	**C601**	FISSO
1.8 - 1.9 Diesel Turbo Diesel	60x34	94->	0829.33	**C545**	MOBILE
1.8 - 1.9 Diesel Turbo Diesel	60x34	94->	0830.13	**C546**	FISSO
2.0 16v	90x24,7/32,5	94-95	575118	**C768**	

TENDICINGHIA DISTRIBUZIONE
BELT TIGHTENERS
TENDEURS DE COURROIE

follows PEUGEOT

MODELLO	DIMENSIONI	ANNO	RIF ORIGINALE	RIF CORAM	NOTE
405 I					
1.6	90x25	87-92	575120	**C785**	
1.8 Turbo Diesel / 1.9 Diesel	85x26/35,5	88-92	96074514	**C769**	
405 I BREAK					
1.8 Turbo Diesel/1.9 Diesel	85x26/35,5	88-92	96074514	**C769**	
405 II					
1.6 / 1.8/ 2.0	90x25	92-95	575120	**C785**	
1.9 Diesel /Turbo Diesel	85x26/35,5	92-95	96074514	**C769**	
2.0 16v	90x25	94-95	575120	**C785**	
405 II BREAK					
1.6/1.8/2.0/2.0 4X4	90x24,7/32,5	92-96	575118	**C768**	
1.6/1.8/2.0/2.0 4x4	90x25	92-96	575120	**C785**	
1.9 Diesel	85x26/35,5	94-96	96074514	**C769**	
406					
1.6	57x24	87-92	0829.12	**C603**	MOBILE
1.6	90x25	95-04	575120	**C785**	
1.6	90x24,7/32,5	95-04	575118	**C768**	
1.6-1.6i-1.8i 8Valv-2.0iT	59x22/32,6	92->	96052662	**C738**	MOBILE
1.8i 16v-2.0i 16v	10x60x34/42	95->	9400830379	**C737**	FISSO
1.8	90x24,7/32,5	97-04	575118	**C768**	
1.8 16V	90x24,7/32,5	95-00	575118	**C768**	
1.8 16v/ 2.0 16v	13x57x33/41	95-04	82932	**C781**	
1.8	90x25	97-04	575120	**C785**	
1.8 16v	90x25	95-00	575120	**C785**	
1.9 Turbo Diesel	60x34	95-98	0829.33	**C545**	MOBILE
1.9 Turbo DS	17x60x25,5	96->	7700102931	**C752**	PULEGGIA
1.9 Turbo Diesel	60x34	95-98	0830.13	**C546**	FISSO
1.9 Turbo Diesel	85x26/35,5	96-04	96074514	**C769**	
1.9 D	10x70x27/29	96-04	95577787	**C794**	
1.9 TD	10x70x27/29	96-04	95577787	**C794**	
2.0 16v	90x25	95-04	575120	**C785**	
2.0 Turbo	90x25	96-04	575120	**C785**	
2.0 HDI 110	10x70x27/29	98-01	95577787	**C794**	
2.0 Turbo Diesel HDI - 2.2	13x60x34/42	98->	0829.62	**C742**	MOBILE
2.0 Turbo Diesel HDI- 2.2	10x60x34/42	99->	0830.31	**C743**	FISSO
2.0 HDI 90	10x70x27/29	99-04	95577787	**C794**	
2.0 HDI 110 FAP	10x70x27/29	01-apr	95577787	**C794**	
2.1 Turbo Diesel	10x60x34/42	95->	9400830379	**C737**	FISSO
2.1 Turbo DS 12V	17x60x25,5	96->	7700102931	**C752**	PULEGGIA
2.1 TD 12V	10x70x27/29	96-04	95577787	**C794**	
2.1 Turbo Diesel 12V	85x26/35,5	96-04	96074514	**C769**	

TENDICINGHIA DISTRIBUZIONE
BELT TIGHTENERS
TENDEURS DE COURROIE

follows PEUGEOT

MODELLO	DIMENSIONI	ANNO	RIF ORIGINALE	RIF CORAM	NOTE
406 BREAK					
1.8	90x24,7/32,5	97->	575118	**C768**	
1.8 16V	90x24,7/32,5	96->	575118	**C768**	
1.8 16v/2.0 16v	13x57x33/41	96-00	82932	**C781**	
1.8	90x25	97->	575120	**C785**	
1.8 16v	90x25	96-00	575120	**C785**	
1.9 Diesel	85x26/35,5	96->	96074514	**C769**	
1.9 Turbo Diesel / 2.1 TD 12v	85x26/35,5	96->	96074514	**C769**	
1.9 D	10x70x27/29	96->	95577787	**C794**	
1.9 TD	10x70x27/29	96->	95577787	**C794**	
2.0 16v/ Turbo	90x25	96->	575120	**C785**	
2.0 HDI 110	10x70x27/29	99-04	95577787	**C794**	
2.0 HDI 90	10x70x27/29	99->	95577787	**C794**	
2.0 HDI 110 FAP	10x70x27/29	01->	95577787	**C794**	
2.1 TD 12V	10x70x27/29	96->	95577787	**C794**	
406 COUPE					
2.0 16V	13x57x33/41	97-00	82932	**C781**	
2.0 16V	90x25	97->	575120	**C785**	
505					
2.0i	60x28	79->	7700692315	**C602**	MOBILE
2.2i	60x28	83-89	7700692315	**C602**	MOBILE
605					
2.0-2.0iT	59x22/32,6	89-99	96052662	**C738**	MOBILE
2.0 Turbo	90x25	91-99	575120	**C785**	
2.0 16 v	90x24,7/32,5	94-99	575118	**C768**	
2.0i 16v-2.1 Diesel Turbo Diesel	10x60x34/42	94-99	9400830379	**C737**	FISSO
2.0 16V	13x57x33/41	94-99	82932	**C781**	
2.0 16V	90x25	94-99	575120	**C785**	
2.1 D	10x70x27/29	89-95	95577787	**C794**	
2.1 DS	17x60x25,5	89-95	7700102931	**C752**	PULEGGIA
2.1 Turbo DS	17x60x25,5	89-99	7700102931	**C752**	PULEGGIA
2.1 Turbo Diesel	10x70x27/29	89-99	95577787	**C794**	
2.1 Turbo Diesel 12V	85x26/35,5	94-99	96074514	**C769**	
2.1 Turbo DS 12V	17x60x25,5	94-99	7700102931	**C752**	PULEGGIA
2.1 TD 12V	10x70x27/29	94-99	95577787	**C794**	
2.5 Turbo Diesel	70,5x32/40,5	94-99	081820	**C779**	
2.5 Turbo Diesel	10x70,5x32/37	94-99	083012	**C780**	
607 (95, 9U)					
2.0 HDI	10x70x27/29	00->	95577787	**C794**	

TENDICINGHIA DISTRIBUZIONE
BELT TIGHTENERS
TENDEURS DE COURROIE

follows PEUGEOT

MODELLO	DIMENSIONI	ANNO	RIF ORIGINALE	RIF CORAM	NOTE
806					
1.8	90x25	95-02	575120	**C785**	
1.8	90x24,7/32,5	95-02	575118	**C768**	
1.8i-2.0i-20iT	59x22/32,6	94->	96052662	**C738**	MOBILE
1.9 Diesel Turbo Diesel	60x34	95->	0829.33	**C545**	MOBILE
1.9 Diesel Turbo Diesel	60x34	95->	0830.13	**C546**	FISSO
1.9 Turbo DS	17x60x25,5	95-02	7700102931	**C752**	PULEGGIA
1.9 Turbo Diesel	85x26/35,5	95-02	96074514	**C769**	
1.9 TD	10x70x27/29	95-02	95577787	**C794**	
1.9 Diesel - 2.0 Turbo Diesel HDI	13x60x34/42	98->	0829.62	**C742**	MOBILE
1.9 Diesel - 2.0 Turbo Diesel HDI	10x60x34/42	98->	0830.31	**C743**	FISSO
2.0 /Turbo	90x24,7/32,5	94-02	575118	**C768**	
2.0/ 2.0 Turbo	90x25	94-02	575120	**C785**	
2.0 HDI	10x70x27/29	99-02	95577787	**C794**	
2.0 16V	13x57x33/41	98-00	82932	**C781**	
2.0 16V	90x25	98-00	575120	**C785**	
2.0i 16v -2.1 Turbo Diesel	10x60x34/42	96->	9400830379	**C737**	FISSO
2.1 Turbo DS	17x60x25,5	96-99	7700102931	**C752**	PULEGGIA
2.1 TD 12V	85x26/35,5	96-99	96074514	**C769**	
2.1 TD 12V	10x70x27/29	96-99	95577787	**C794**	
807 (E)					
2.0 HDI FAP	10x70x27/29	02->	95577787	**C794**	
1007					
1.4	60x25	05->	9642929880	**C793**	
BOXER					
1.9 Diesel-Turbo Diesel	60x34	94->	0829.33	**C545**	MOBILE
1.9 Diesel-Turbo Diesel	60x34	94->	0830.13	**C546**	FISSO
2.0 i 8v	59x22/32,6	94->	96052662	**C738**	MOBILE
1.9 Diesel - 2.0 Turbo Diesel HDI	13x60x34/42	98->	0829.62	**C742**	MOBILE
1.9 Diesel - 2.0 Turbo Diesel HDI	10x60x34/42	98->	0830.31	**C743**	FISSO
2.0 Hdi Autobus/Furgonato	17x60x25,5	02->	7700102931	**C752**	PULEGGIA
2.0 Hdi Pianale piatto/Autotelaio	17x60x25,5	02->	7700102931	**C752**	PULEGGIA
2.0 i 4x4	90x24,7/32,5	94-02	575118	**C768**	
2.0 i Autobus / Furgonato/Pianale piatto	90x24,7/32,5	94-02	575118	**C768**	
1.9 Diesel / Turbo Diesel	85x26/35,5	94-02	96074514	**C769**	
1.9 Diesel Furgonato/ Turbo Diesel	85x26/35,5	94-02	96074514	**C769**	
1.9 TD Pianale piatto/Autotelaio	85x26/35,5	96-02	96074514	**C769**	
1.9 Turbo Diesel 4x4	85x26/35,5	96-02	96074514	**C769**	
2.5 Diesel /Turbo Diesel/Furgonato/Pianale piatto	70,5x32/40,5	94-02	081820	**C779**	
2.5 Diesel 4x4/ Pianale piatto Autotelaio	70,5x32/40,5	94-02	081820	**C779**	
2.5 Diesel 4x4/ Pianale piatto Autotelaio	10x70,5x32/37	96-02	083012	**C780**	
2.5 Diesel/Turbo Diesel/Pianale piatto Autotelaio	10x70,5x32/37	94-02	083012	**C780**	
2.0 i /Furgonato/Pianale piatto Autotelaio	13x57x33/41	94-02	82932	**C781**	
2.0 i 4x4	13x57x33/41	96-02	82932	**C781**	

TENDICINGHIA DISTRIBUZIONE
BELT TIGHTENERS
TENDEURS DE COURROIE

follows PEUGEOT

MODELLO	DIMENSIONI	ANNO	RIF ORIGINALE	RIF CORAM	NOTE
EXPERT					
1.6	30x57x24	96->	0829.17	**C525**	FISSO
1.9 D	10x70x27/29	96->	95577787	**C794**	
1.9 Diesel-Turbo Diesel	60x34	96-98	0829.33	**C545**	MOBILE
1.9 Diesel-Turbo Diesel	60x34	96-98	0830.13	**C546**	FISSO
1.9 DS/Diesel	17x60x25,5	96->	7700102931	**C752**	PULEGGIA
1.9 Turbo DS	17x60x25,5	96->	7700102931	**C752**	PULEGGIA
1.9 TD	10x70x27/29	96->	95577787	**C794**	
1.9 Diesel / Turbo Diesel/ Pianale piatto	85x26/35,5	96->	96074514	**C769**	
2.0 Turbo Diesel HDI	13x60x34/42	99->	0829.62	**C742**	MOBILE
2.0 Turbo Diesel HDI	10x60x34/42	99->	0830.31	**C743**	FISSO
2.0 HDI	10x70x27/29	00->	95577787	**C794**	
EXPERT Furgonato					
1.9 D	10x70x27/29	96->	95577787	**C794**	
1.9 TD	10x70x27/29	96->	95577787	**C794**	
1.9 D 70	10x70x27/29	98->	95577787	**C794**	
2.0 HDI	10x70x27/29	00->	95577787	**C794**	
EXPERT Pianale Piatto					
1.9 D	10x70x27/29	96->	95577787	**C794**	
1.9 TD	10x70x27/29	96->	95577787	**C794**	
J5					
1.9 Diesel	60x34	83-93	0829.11	**C600**	MOBILE
1.9 Diesel	60x34	83-93	0830.02	**C601**	FISSO
1.9 Diesel	60x34	94->	0829.33	**C545**	MOBILE
1.9 Diesel	60x34	94->	0830.13	**C546**	FISSO
2.5 Diesel - Turbo Diesel	38x67,5x35,5	87->	0818.17	**C535**	MOBILE
2.5 Diesel - Turbo Diesel	30x57x24	87->	0829.17	**C525**	P.INIEZ.
PARTNER					
1.8 - 1.9 Diesel	60x34	94->	0829.33	**C545**	MOBILE
1.8 - 1.9 Diesel	60x34	94->	0830.13	**C546**	FISSO
1.1i -1.4I	13x59x22/33	96->	0829.19	**C604**	MOBILE
1.8i	59x22/32,6	96->	96052662	**C738**	MOBILE
1.9 Diesel-2.0 Turbo Diesel TDI	13x60x34/42	98->	0829.62	**C742**	MOBILE
1.9 Diesel-2.0 Turbo Diesel TDI	10x60x34/42	98->	0830.31	**C743**	FISSO
1.8 DS/Diesel/ Furgonato	17x60x25,5	96->	7700102931	**C752**	PULEGGIA
1.9 DS/Diesel / Furgonato	17x60x25,5	96->	7700102931	**C752**	PULEGGIA
2.0 HDI/Furgonato	17x60x25,5	00->	7700102931	**C752**	PULEGGIA
1.8	90x24,7/32,5	97->	575118	**C768**	
1.9 Diesel Combispace/ 1.8 Diesel Furgonato	85x26/35,5	96->	96074514	**C769**	
2.0 HDI Combispace	85x26/35,5	00->	96074514	**C769**	
1.8 Combispace	90x25	97->	575120	**C785**	

follows PEUGEOT

MODELLO	DIMENSIONI	ANNO	RIF ORIGINALE	RIF CORAM	NOTE
PARTNER Combispace					
1.1 - 1.4	60x25	96->	9642929880	**C793**	
1.1 - 1.4	65x26,5/59	96->	6453.S5	**C796**	
1.9 D	10x70x27/29	96->	95577787	**C794**	
2.0 HDI	10x70x27/29	00->	95577787	**C794**	
PARTNER Furgonato					
1.1 - 1.4	60x25	96->	9642929880	**C793**	
1.1 - 1.4	65x26,5/59	96->	6453.S5	**C796**	
1.4 BiFuel	60x25	03->	9642929880	**C793**	
1.8 D	10x70x27/29	96->	95577787	**C794**	
1.9 D	10x70x27/29	96->	95577787	**C794**	
2.0 HDI	10x70x27/29	00->	95577787	**C794**	

PORSCHE

924					
2.5 S	10x59x26/31	81-87	94410502704	**C812**	
944					
2.5	10x59x26/31	81-87	94410502704	**C812**	

TENDICINGHIA DISTRIBUZIONE
BELT TIGHTENERS
TENDEURS DE COURROIE

RENAULT

MODELLO	DIMENSIONI	ANNO	RIF ORIGINALE	RIF CORAM	NOTE
AVANTIME					
2.0 16V TD	17x60x25,5	01-03	7700102931	**C752**	PULEGGIA
CHAMADE					
1.2-1.4	10x50x22	88-96	7700736085	**C702**	MOBILE
1.7-1.8-1.9 Diesel	50x31	88-96	7700726440	**C706**	MOBILE
1.7-1.8-1.9 Diesel	50x31	88-96	7700735486	**C707**	FISSO
1.8 16 v	50x31	89-96	7700736419	**C709**	MOBILE
1.8 16 v	50x31	89-96	7700733489	**C708**	FISSO
CLIO					
1.2	10x50x22	95-97	7700736085	**C702**	MOBILE
1.2-1.2i-1.4	10x50x22	90->	7700736085	**C702**	MOBILE
1.7-1.8-1.9 Diesel	50x31	91-96	7700726440	**C706**	MOBILE
1.7-1.8	50x31	91-96	7700735486	**C707**	FISSO
1.8 16 v-1.9 Diesel-2.0 16 v	50x31	91->	7700733489	**C708**	FISSO
1.8 16 v-2.0 16 v	50x31	91->	7700736419	**C709**	MOBILE
1.9 DS	10,2x59x31/32,8	98->	7700875307	**C751**	PULEGGIA
1.9 DTI	10,2x59x31/32,8	00->	7700875307	**C751**	PULEGGIA
1.4 16V	17x60x25,5	99->	7700102931	**C752**	PULEGGIA
1.6 16V	17x60x25,5	99->	7700102931	**C752**	PULEGGIA
CLIO II					
1.4	10,3x55x22	98->	7700273277	**C816**	
1.4	17x60x25,5	98->	7700102931	**C752**	
1.4 16V	17x60x25,5	99->	7700102931	**C752**	
1.6	10,3x55x22	98->	7700273277	**C816**	
1.6 16V	17x60x25,5	98->	7700102931	**C752**	
ESPACE					
2.0-2.2	60x28	77-91	7700692315	**C602**	MOBILE
2.1 Turbo Diesel	60x33	84-95	7700722452	**C704**	MOBILE
2.1 Turbo Diesel	60x33x45	84-96	7700721690	**C705**	FISSO
1.9 DTI	10,2x59x31/32,8	99->	7700875307	**C751**	PULEGGIA
1.9 DTI	17x60x25,5	99->	7700102931	**C752**	PULEGGIA
2.0 16V	17x60x25,5	98->	7700102931	**C752**	PULEGGIA
2.2 DCI	17x60x25,5	00->	7700102931	**C752**	PULEGGIA
ESPACE III					
2.0	17x60x25,5	01-02	7700102931	**C752**	
2.0 16V	17x60x25,5	98-02	7700102931	**C752**	
2.2 DCI	17x60x25,5	00-02	7700102931	**C752**	

TENDICINGHIA DISTRIBUZIONE
BELT TIGHTENERS
TENDEURS DE COURROIE

follows RENAULT

MODELLO	DIMENSIONI	ANNO	RIF ORIGINALE	RIF CORAM	NOTE
EXPRESS					
1.4	10x50x22	89->	7700736085	**C702**	MOBILE
1.6 Diesel	10x50x31/37	85-88	7700696986	**C703**	MOBILE
1.6 Diesel	22x50x31	85-88	7700696987	**C700**	FISSO
1.6 Diesel	50x31	88-96	7700735486	**C707**	FISSO
1.6 Diesel	50x31	88-96	7700726440	**C706**	MOBILE
1.9 Diesel	50x31	92-96	7700726440	**C706**	MOBILE
1.9 Diesel	50x31	92-96	7700733489	**C708**	FISSO
1.9 DS	10,2x59x31/32,8	94-98	7700875307	**C751**	PULEGGIA
FUEGO					
2.0-2.2	60x28	78-86	7700692315	**C602**	MOBILE
2.1 Diesel - Turbo Diesel	60x33	82-86	7700722452	**C704**	MOBILE
2.1 Diesel - Turbo Diesel	60x33x45	82-86	7700721690	**C705**	FISSO
JEPP					
2.1 Diesel - Turbo Diesel	60x33	85-93	7700722452	**C704**	MOBILE
2.1 Diesel - Turbo Diesel	60x33x45	85-93	7700721690	**C705**	FISSO
KANGOO					
1.2i-1.4	10x50x22	91-97	7700736085	**C702**	MOBILE
1.4	10,3x55x22	98->	7700273277	**C816**	
1.4	17x60x25,5	98->	7700102931	**C752**	
1.9 DCI 4x4	10,2x59x31/32,8	01->	7700875307	**C751**	PULEGGIA
1.9 DS	10,2x59x31/32,8	98->	7700875307	**C751**	PULEGGIA
1.9 DTI	10,2x59x31/32,8	00->	7700875307	**C751**	PULEGGIA
1.6 16V	17x60x25,5	01->	7700102931	**C752**	PULEGGIA
1.6 16V 4x4	17x60x25,5	01->	7700102931	**C752**	
KANGOO Express					
1.4	10,3x55x22	98->	7700273277	**C816**	
1.4	17x60x25,5	98->	7700102931	**C752**	
1.6 16V / 1.6 16V 4x4	17x60x25,5	01->	7700102931	**C752**	
LAGUNA					
1.6 16					
1.8-2.0	50x31	93-96	7700726440	**C706**	MOBILE
1.9 Diesel	50x31	97->	7700726440	**C706**	MOBILE
1.8-2.0	50x31	93-96	7700735486	**C707**	FISSO
1.9 DTI	10,2x59x31/32,8	97-01	7700875307	**C751**	PULEGGIA
1.6 16V/Grandtour	17x60x25,5	97->	7700102931	**C752**	PULEGGIA
1.8 16V/Grandtour	17x60x25,5	98->	7700102931	**C752**	PULEGGIA
1.9 DCI/Grandtour	17x60x25,5	99-01	7700102931	**C752**	
1.9 DTI/Grandtour	17x60x25,5	97-01	7700102931	**C752**	PULEGGIA
2.0 16V	17x60x25,5	01->	7700102931	**C752**	PULEGGIA
2.2 DCI/Grandtour	17x60x25,5	96-01	7700102931	**C752**	PULEGGIA

TENDICINGHIA DISTRIBUZIONE
BELT TIGHTENERS
TENDEURS DE COURROIE

follows RENAULT

MODELLO	DIMENSIONI	ANNO	RIF ORIGINALE	RIF CORAM	NOTE
LAGUNA II					
1.6 16V	17x60x25,5	01->	7700102931	**C752**	
1.8 16V	17x60x25,5	01->	7700102931	**C752**	
1.9 DCI	17x60x25,5	01->	7700102931	**C752**	
2.2 DCI	17x60x25,5	01->	7700102931	**C752**	
LAGUNA II Grandtour					
1.6 16V	17x60x25,5	01->	7700102931	**C752**	
1.8 16V	17x60x25,5	01->	7700102931	**C752**	
1.9 DCI	17x60x25,5	01->	7700102931	**C752**	
2.2 DCI	17x60x25,5	01->	7700102931	**C752**	
LOGAN					
1.4	10,3x55x22	04->	7700273277	**C816**	
1.4	17x60x25,5	04->	7700102931	**C752**	
1.6	10,3x55x22	04->	7700273277	**C816**	
1.6	17x60x25,5	04->	7700102931	**C752**	
MASTER					
2.4 Diesel-Turbo Diesel	25x67x34	80->	5001001259	**C512**	SUPERIORE
2.4 Diesel-Turbo Diesel	25x63,7x34	80->	5001001272	**C513**	INFERIORE
2.0-2.2	60x28	81-91	7700692315	**C602**	MOBILE
2.0	55x25	89->	7700745215	**C702**	MOBILE
2.1 Diesel	60x33	81-91	7700722452	**C704**	MOBILE
2.1 Diesel	60x33x45	81-91	7700721690	**C705**	FISSO
1.9 DTI	10,2x59x31/32,8	00->	7700875307	**C751**	PULEGGIA
2.2 DCI/Furgonato	17x60x25,5	00->	7700102931	**C752**	PULEGGIA
2.5 DCI/Furgonato	17x60x25,5	01->	7700102931	**C752**	PULEGGIA
MASTER II Autobus					
1.9 DCI 80	17x60x25,5	01->	7700102931	**C752**	
2.2 DCI 90 - 2.5 DCI 120	17x60x25,5	00->	7700102931	**C752**	
MASTER II Furgonato					
1.9 DCI 80	17x60x25,5	01->	7700102931	**C752**	
2.2 DCI 90 - 2.5 DCI 120	17x60x25,5	00->	7700102931	**C752**	
MASTER II Pianale piatto					
2.2 DCI 90 - 2.5 DCI 120	17x60x25,5	00->	7700102931	**C752**	

TENDICINGHIA DISTRIBUZIONE
BELT TIGHTENERS
TENDEURS DE COURROIE

follows RENAULT

MODELLO	DIMENSIONI	ANNO	RIF ORIGINALE	RIF CORAM	NOTE
MEGANE					
1.4-1.6	10x50x22	96->	7700736085	**C702**	MOBILE
1.9 Diesel Turbo Diesel-2.0	50x31	95->	7700726440	**C706**	MOBILE
1.9 Diesel Turbo Diesel-2.0	50x31	95->	7700735486	**C707**	FISSO
2.0 16 v	50x31	95->	7700733489	**C708**	FISSO
2.0 16 v	50x31	95->	7700736419	**C709**	MOBILE
1.9 DCI	10,2x59x31/32,8	97->	7700875307	**C751**	PULEGGIA
1.9 DS (F8Q624)	10,2x59x31/32,8	96->	7700875307	**C751**	PULEGGIA
1.9 DTI	10,2x59x31/32,8	01->	7700875307	**C751**	PULEGGIA
1.9 TDS (F8Q786)	10,2x59x31/32,8	96->	7700875307	**C751**	PULEGGIA
1.4	17x60x25,5	96->	7700102931	**C752**	PULEGGIA
1.4 16V	17x60x25,5	99->	7700102931	**C752**	PULEGGIA
1.6 16V	17x60x25,5	99->	7700102931	**C752**	PULEGGIA
1.8 16V	17x60x25,5	01->	7700102931	**C752**	PULEGGIA
1.9 DCI	17x60x25,5	97->	7700102931	**C752**	PULEGGIA
1.9 DS (F8Q620)	17x60x25,5	->96	7700102931	**C752**	PULEGGIA
1.9 DS (F8Q624)	17x60x25,5	96->	7700102931	**C752**	PULEGGIA
1.9 DTI	17x60x25,5	97-01	7700102931	**C752**	PULEGGIA
1.9 DTI	17x60x25,5	01->	7700102931	**C752**	PULEGGIA
1.9 TDS (F8Q784)	17x60x25,5	->96	7700102931	**C752**	PULEGGIA
1.9 TDS (F8Q786)	17x60x25,5	96->	7700102931	**C752**	PULEGGIA
2.0 16 v	17x60x25,5	99->	7700102931	**C752**	PULEGGIA
MEGANE CLASSIC					
1.4	10,3x55x22	96->	7700273277	**C816**	
1.4	17x60x25,5	96->	7700102931	**C752**	
1.4 16V	17x60x25,5	99->	7700102931	**C752**	
1.6 i	10,3x55x22	96-99	7700273277	**C816**	
1.6 16V	17x60x25,5	99->	7700102931	**C752**	
1.8 16V	17x60x25,5	01->	7700102931	**C752**	
2.0 i	17x60x25,5	99->	7700102931	**C752**	
MEGANE COACH					
1.4 16 v	17x60x25,5	99->	7700102931	**C752**	PULEGGIA
1.6 16 v	17x60x25,5	99->	7700102931	**C752**	PULEGGIA
1.9 16 v dCi/dTi	17x60x25,5	01->	7700102931	**C752**	PULEGGIA
2.0 16 v	17x60x25,5	99->	7700102931	**C752**	PULEGGIA
2.0 16 v IDE	17x60x25,5	99->	7700102931	**C752**	
MEGANE GRANTOUR					
1.4 16V	17x60x25,5	99->	7700102931	**C752**	
1.4 e	17x60x25,5	99->	7700102931	**C752**	
1.4 e	10,3x55x22	96->	7700273277	**C816**	
1.6 16V	17x60x25,5	99->	7700102931	**C752**	
1.8 16V	17x60x25,5	01->	7700102931	**C752**	

TENDICINGHIA DISTRIBUZIONE
BELT TIGHTENERS
TENDEURS DE COURROIE

follows RENAULT

MODELLO	DIMENSIONI	ANNO	RIF ORIGINALE	RIF CORAM	NOTE
MEGANE I					
1.4 16V	17x60x25,5	99->	7700102931	**C752**	PULEGGIA
1.4 e	10,3x55x22	96->	7700102931	**C816**	
1.4 e	17x60x25,5	96->	7700102931	**C752**	
1.6 16V	17x60x25,5	99->	7700102931	**C752**	PULEGGIA
1.6 i	10,3x55x22	96-99	7700273277	**C816**	
1.8 16V	17x60x25,5	01->	7700102931	**C752**	PULEGGIA
1.9 Diesel Eco	17x60x25,5	96->	7700102931	**C752**	PULEGGIA
1.9 dCi	17x60x25,5	01->	7700102931	**C752**	PULEGGIA
1.9 dT	17x60x25,5	96->	7700102931	**C752**	PULEGGIA
1.9 dTi	17x60x25,5	97-01	7700102931	**C752**	PULEGGIA
2.0 i	17x60x25,5	99->	7700102931	**C752**	
MEGANE Cabriolet					
1.4 16V	17x60x25,5	99->	7700102931	**C752**	
1.6 16V	17x60x25,5	99->	7700102931	**C752**	
2.0 16V	17x60x25,5	02->	7700102931	**C752**	
2.0 16V IDE	17x60x25,5	99->	7700102931	**C752**	
MEGANE SCENIC					
1.6 i	10,3x55x22	97-99	7700273277	**C816**	
1.9 DCI	10,2x59x31/32,8	99->	7700875307	**C751**	PULEGGIA
1.9 DCI 4x4	10,2x59x31/32,8	99->	7700875307	**C751**	PULEGGIA
1.9 DTI	10,2x59x31/32,8	99->	7700875307	**C751**	PULEGGIA
1.9 DT / Dti	17x60x25,5	97-99	7700102931	**C752**	PULEGGIA
R 9					
1.6 Diesel	10x50x31/37	83-87	7700696986	**C703**	MOBILE
1.6 Diesel	22x50x31	83-87	7700696987	**C700**	FISSO
1.6 Diesel-1.7	50x31	88->	7700726440	**C706**	MOBILE
1.6 Diesel-1.7	50x31	88->	7700735486	**C707**	FISSO
1.7	50x31	85-88	7700720366	**C701**	MOBILE
1.7	22x50x31	85-88	7700696987	**C700**	FISSO
R 10					
1.7	22x50x31	83-88	7700696987	**C700**	FISSO
R 11					
1.6 Diesel	10x50x31/37	83-88	7700696986	**C703**	MOBILE
R 12					
1.6 Diesel	22x50x31	83-88	7700696987	**C700**	FISSO

follows RENAULT

MODELLO	DIMENSIONI	ANNO	RIF ORIGINALE	RIF CORAM	NOTE
R11					
1.7	50x31	83-88	7700720366	**C701**	MOBILE
1.7	22x50x31	83-88	7700696987	**C700**	FISSO
1.6 Diesel	10x50x31/37	83-88	7700696986	**C703**	MOBILE
1.6 Diesel	22x50x31	83-88	7700696987	**C700**	FISSO
1.7	50x31	88->	7700726440	**C706**	MOBILE
1.7	50x31	88->	7700735486	**C707**	FISSO
R 18					
2.0-2.2	60x28	78-86	7700692315	**C602**	MOBILE
2.1 Diesel-Turbo Diesel	60x33	83-86	7700722452	**C704**	MOBILE
2.1 Diesel-Turbo Diesel	60x33x45	83-86	7700721690	**C705**	FISSO
R 19					
1.2-1.4	10x50x22	88->	7700736085	**C702**	MOBILE
1.9 Diesel-Turbo Diesel	22x50x31	88->	7700696987	**C700**	FISSO
1.7-1.8-1.9 Diesel Turbo Diesel	50x31	88-96	7700726440	**C706**	MOBILE
1.7-1.8-1.9 Diesel	50x31	88-96	7700735486	**C707**	FISSO
1.8 16 v	50x31	89-96	7700736419	**C709**	MOBILE
1.8 16 v	50x31	89-96	7700733489	**C708**	FISSO
R 20					
2.0-2.2	60x28	77-84	7700692315	**C602**	MOBILE
2.1 Diesel	60x33	80-84	7700722452	**C704**	MOBILE
2.1 Diesel	60x33x45	80-84	7700721690	**C705**	FISSO
2.1Turbo Diesel	60x33	83-86	7700722452	**C704**	MOBILE
2.1Turbo Diesel	60x33x45	83-86	7700721690	**C705**	FISSO
R 21 - NEVADA					
1.7	50x31	86-88	7700720366	**C701**	MOBILE
1.7	22x50x31	86-88	7700696987	**C700**	FISSO
2.0-2.2	60x28	77->	7700692315	**C602**	MOBILE
2.1 TD-GTD	60x33	86->	7700722452	**C704**	MOBILE
2.1 TD-GTD	60x33x45	86->	7700721690	**C705**	FISSO
1.7-1.8-1.9 Diesel-2.0	50x31	88-94	7700726440	**C706**	MOBILE
1.7-1.8-1.9 Diesel-2.0	50x31	88-94	7700735486	**C707**	FISSO
R 25					
2.0-2.2	60x28	84-92	7700692315	**C602**	MOBILE
2.1 Diesel-Turbo Diesel	60x33	84-92	7700722452	**C704**	MOBILE
2.1 Diesel-Turbo Diesel	60x33x45	84-92	7700721690	**C705**	FISSO

TENDICINGHIA DISTRIBUZIONE
BELT TIGHTENERS
TENDEURS DE COURROIE

follows RENAULT

MODELLO	DIMENSIONI	ANNO	RIF ORIGINALE	RIF CORAM	NOTE
R 30					
2.0	60x28	78-86	7700692315	**C602**	MOBILE
2.1 Diesel-Turbo Diesel	60x33	81-84	7700722452	**C704**	MOBILE
2.1 Diesel-Turbo Diesel	60x33x45	81-84	7700721690	**C705**	FISSO
RAPID					
1.9 DS	10,2x59x31/32,8	94-98	7700875307	**C751**	PULEGGIA
SAFRANE					
2.0	60x28	92-95	7700692315	**C602**	MOBILE
SCENIC					
1.4-1.6	10x50x22	95-97	7700736085	**C702**	MOBILE
1.6 i	10,3x55x22	99->	7700273277	**C816**	
1.9 Diesel Turbo Diesel - 2.0	50x31	95->	7700726440	**C706**	MOBILE
1.9 Diesel Turbo Diesel - 2.0	50x31	95->	7700735486	**C707**	FISSO
2.0 16 v	50x31	95->	7700733489	**C708**	FISSO
2.0 16 v	50x31	95->	7700736419	**C709**	MOBILE
1.4 16V	17x60x25,5	99->	7700102931	**C752**	PULEGGIA
1.6 16V	17x60x25,5	99->	7700102931	**C752**	PULEGGIA
1.8 16V	17x60x25,5	01->	7700102931	**C752**	PULEGGIA
1.9 DCI	17x60x25,5	99->	7700102931	**C752**	PULEGGIA
1.9 DCI 4x4	17x60x25,5	99->	7700102931	**C752**	PULEGGIA
1.9 DTI	17x60x25,5	99->	7700102931	**C752**	PULEGGIA
2.0 16V	17x60x25,5	00>	7700102931	**C752**	PULEGGIA
2.0 16V IDE	17x60x25,5	99->	7700102931	**C752**	
2.0 16V 4x4	17x60x25,5	00->	7700102931	**C752**	PULEGGIA
SUPER 5					
1.7	50x31	85-88	7700720366	**C701**	MOBILE
1.7	22x50x31	85-88	7700696987	**C700**	FISSO
1.6 Diesel	10x50x31/37	85-88	7700696986	**C703**	MOBILE
1.6 Diesel	22x50x31	85-88	7700696987	**C700**	FISSO
1.6 Diesel-1.7	50x31	88-91	7700726440	**C706**	MOBILE
1.6 Diesel-1.7	50x31	88-91	7700735486	**C707**	FISSO
TRAFIC					
1.7	50x31	81-88	7700720366	**C701**	MOBILE
1.7	22x50x31	81-88	7700696987	**C700**	FISSO
1.7	50x31	88-96	7700735486	**C707**	FISSO
1.7	50x31	88-96	7700726440	**C706**	MOBILE
1.9 DS	17x60x25,5	97-01	7700875307	**C751**	PULEGGIA
2.0-2.2	60x28	81-95	7700692315	**C602**	MOBILE
2.0	55x25	89->	7700745215	**C702**	MOBILE
2.1 Diesel	60x33	81-95	7700722452	**C704**	MOBILE
2.1 Diesel	60x33x45	81->	7700721690	**C705**	FISSO
2.4 Diesel	25x67x34	89->	5001001259	**C512**	SUPERIORE
2.4 Diesel	25x63,7x34	89->	5001001272	**C513**	INFERIORE

follows RENAULT

MODELLO	DIMENSIONI	ANNO	RIF ORIGINALE	RIF CORAM	NOTE
TRAFIC II Autobus					
dci 80	17x60x25,5	01->	7700102931	**C752**	
dci 100	17x60x25,5	01->	7700102931	**C752**	
TRAFIC II Furgonato					
1.9 dci 100	17x60x25,5	01->	7700102931	**C752**	
1.9 dci 80	17x60x25,5	01->	7700102931	**C752**	
TRAFIC II Pianale piatto					
1.9 dci 100	17x60x25,5	01->	7700102931	**C752**	
1.9 dci 80	17x60x25,5	01->	7700102931	**C752**	
VEL SATIS					
2.2 dCi	17x60x25,5	02->	7700102931	**C752**	PULEGGIA

ROVER

MODELLO	DIMENSIONI	ANNO	RIF ORIGINALE	RIF CORAM	NOTE
114					
1.4 Diesel	10x60x34/42	92->	9400830379	**C737**	FISSO
115					
1.5 Diesel	10x60x34/42	92->	9400830379	**C737**	FISSO
218					
1.8 Turbo Diesel-1.9 Diesel	60x34	83-93	LHP-10010	**C600**	MOBILE
1.8 Turbo Diesel-1.9 Diesel	60x34	83-93	LHP-10009	**C601**	FISSO
1.8 Turbo Diesel-1.9 Diesel	60x34	94->	LHP-100590	**C545**	MOBILE
1.8 Turbo Diesel-1.9 Diesel	60x34	94->	LHP-100070	**C546**	FISSO
418					
1.8 Turbo Diesel	60x34	83-93	LHP-10010	**C600**	MOBILE
1.8 Turbo Diesel	60x34	83-93	LHP-10009	**C601**	FISSO
1.8 Turbo Diesel	60x34	94->	LHP-100590	**C545**	MOBILE
1.8 Turbo Diesel	60x34	94->	LHP-100070	**C546**	FISSO
METRO					
1.4 Diesel - 1.5 Diesel	10x60x34/42	92->	9400830379	**C737**	FISSO

TENDICINGHIA DISTRIBUZIONE
BELT TIGHTENERS
TENDEURS DE COURROIE

SEAT

MODELLO	DIMENSIONI	ANNO	RIF ORIGINALE	RIF CORAM	NOTE
131					
1.6	25x67x28		4443703	**C515**	FISSO
132					
1.6	25x67x28	79->	4443703	**C515**	FISSO
ALHAMBRA					
2.0 i	10x72/83x25/28	96->	026109243 E	**C731**	MOBILE
ALHAMBRA (7V8,7V9)					
1.9 TDI	67/68x30/40,3	96-00	028109243 F	**C803**	
ALHAMBRA					
1.9 TDI / 2.0 i	M8x1,25x78x26	96-00	028145278E	**C774**	
1.9 TDI (81 KW)	8x28,5x29/31,5	96-00	028109244	**C787**	
1.9 TDI (66KW)	8x28,5x29/31,5	96->	028109244	**C787**	
1.9 TDI/ 4motion	8,3x28,5x34	96->	045109244A	**C783**	
1.9 TDI/ 4motion	40x36	96-01	038109244J	**C784**	
ALTEA					
1.9 TDI	40x36	04->	038109244J	**C784**	
2.0 TDI	40x36	04->	038109244J	**C784**	
AROSA					
1.4 TDI	8,3x28,5x34	00->	045109244A	**C783**	
1.4 TDI	40x36	00->	038109244J	**C784**	
1.7 SDI	8x28,5x29/31,5	97->	028109244	**C787**	
CORDOBA					
1.6 Diesel-1.9 Diesel Turbo Diesel	10x72/82x30/35	93-96	068109243 F	**C730**	MOBILE
1.4-1.6-1.8i-2.0i	10x72/83x25/28	94->	026109243 E	**C731**	MOBILE
1.4	17x70x26	96-98	030145299C	**C757**	FISSO
1.6	17x70x26	93->	030145299C	**C757**	FISSO
CORDOBA (6K2/C2)					
1.9 D - 1.9 TD	67/68x30/40,3	93-96	028109243 F	**C803**	
1.9 SDI - 1.9 TDI	67/68x30/40,3	96-99	028109243 F	**C803**	

TENDICINGHIA DISTRIBUZIONE
BELT TIGHTENERS
TENDEURS DE COURROIE

follows SEAT

MODELLO	DIMENSIONI	ANNO	RIF ORIGINALE	RIF CORAM	NOTE
CORDOBA					
1.9 SDI / TDI	10x80x29/47	99-02	038109244B	**C788**	FISSO
1.9 SDI /TDI	8X65X25/28	99-02	38145276	**C773**	
1.9 TDI (81KW)	8x28,5x29/31,5	97-99	028109244	**C787**	
1.9 SDI /TDI/VARIO	8x28,5x29/31,5	96-99	028109244	**C787**	
1.9 SDI /TDI	8X28,5X29	99-02	058109244	**C786**	
1.9 SDI /TDI VARIO	8X28,5X29	99->	058109244	**C786**	
1.9 SDI /TDI	28,5X29X47	99-02	038109244E	**C789**	
1.9 SDI	10x80x29/47	02->	038109244H	**C788**	FISSO
1.6i/1.8i/1.8i 16v/1.9 Diesel/ 1.9 SDI/ TDI/TD	M8x1,25x78x26	93-99	028145278E	**C774**	
2.0i/ 2.0i 16v	M8x1,25x78x26	93-99	028145278E	**C774**	
1.4 TDI/ 1.9 TDI	40x36	02->	038109244J	**C784**	
CORDOBA Vario					
1.9 SDI	10x80x29/47	99->	038109244B	**C788**	FISSO
1.9 TDI	10x80x29/47	99->	038109244B	**C788**	FISSO
CORDOBA Vario (6K5)					
1.9 SDI - 1.9 TDI	67/68x30/40,3	96-99	028109243 F	**C803**	
CORDOBA Vario					
1.9 SDI - 1.9 TDI	28,5X29X47	99->	038109244E	**C789**	
IBIZA					
1.7 Diesel	25x70,5x33	80-83	XO43552140	**C518**	SUPERIORE
1.7 Diesel	25x70,5x33	80-83	XO43552140	**C518**	INFERIORE
1.7 Diesel	25x70,5x33	84-92	XO43552140	**C518**	INFERIORE
1.7 Diesel	10,5x65x33/48	84-92	5966001	**C519**	SUPERIORE
1.6 Diesel-1.9 Diesel Turbo Diesel	10x72/82x30/35	93-96	068109243 F	**C730**	MOBILE
1.8-2.0i 16 v	10x72/83x25/28	93->	026109243 E	**C731**	MOBILE
1.4	17x70x26	96-98	030145299C	**C757**	FISSO
1.6	17x70x26	93->	030145299C	**C757**	FISSO
2.0i / 2.0 i 16v	M8x1,25x78x26	93-99	028145278E	**C774**	
IBIZA I					
1.2	10x59x26/31	84-93	021012060 A	**C812**	
1.2 i	10x59x26/31	89-93	021012060 A	**C812**	
1.5	10x59x26/31	84-93	021012060 A	**C812**	
IBIZA II (6K1)					
1.9 D - 1.9 TD	67/68x30/40,3	93-96	028109243 F	**C803**	
1.9 SDI - 1.9 TDI	67/68x30/40,3	96-99	028109243 F	**C803**	

TENDICINGHIA DISTRIBUZIONE
BELT TIGHTENERS
TENDEURS DE COURROIE

follows SEAT

MODELLO	DIMENSIONI	ANNO	RIF ORIGINALE	RIF CORAM	NOTE
IBIZA II					
1.9 TDI/SDI	8x28,5x29/31,5	96-99	028109244	**C787**	
1.9 TDI(81KW)	8x28,5x29/31,5	97-99	028109244	**C787**	
1.6i /1.8i / 1.8i 16 v/ 1.9 Diesel/SDI/ TDI/ TD	M8x1,25x78x26	93-99	028145278E	**C774**	
IBIZA III					
1.9 SDI/TDI	8X65X25/28	99-02	38145276	**C773**	
1.9 SDI /TDI	8X28,5X29	99-02	058109244	**C786**	
1.9 SDI /TDI	10x80x29/47	99-02	038109244B	**C788**	FISSO
1.9 SDI /TDI	28,5X29X47	99-02	038109244E	**C789**	
IBIZA IV					
1.9 SDI	10x80x29/47	02->	038109244H	**C788**	FISSO
1.9 TDI CUPRA R	8,3x28,5x34	04->	045109244A	**C783**	
1.4 TDI/ 1.9 TDI	40x36	02->	038109244J	**C784**	
INCA					
1.6	10x72/83x25/28	95-97	026109243 E	**C731**	MOBILE
1.4	17x70x26	95-97	030145299C	**C757**	FISSO
1.6	17x70x26	95-99	030145299C	**C757**	FISSO
1.7 D	8x28,5x29/31,5	96->	028109244	**C787**	
INCA (6K9)					
1.7 D	67/68x30/40,3	96->	028109243 F	**C803**	
INCA					
1.9 SDI	10x80x29/47	95->	038109244B	**C788**	FISSO
1.9 SDI	8X65X25/28	95->	38145276	**C773**	
1.9 SDI	8X28,5X29	95->	058109244	**C786**	
1.9 SDI	28,5X29X47	95->	038109244E	**C789**	
1.9 D - SDI	8x28,5x29/31,5	95->	028109244	**C787**	
INCA (6K9)					
1.9 D - 1.9 SDI	67/68x30/40,3	95->	028109243 F	**C803**	
INCA					
1.6 i/1.7 Diesel/ 1.9 Diesel/ SDI	M8x1,25x78x26	95-98	028145278E	**C774**	

TENDICINGHIA DISTRIBUZIONE
BELT TIGHTENERS
TENDEURS DE COURROIE

follows SEAT

MODELLO	DIMENSIONI	ANNO	RIF ORIGINALE	RIF CORAM	NOTE
LEON					
1.9 SDI / TDI	10x80x29/47	99->	038109244B	**C788**	FISSO
1.9 SDI / TDI	8X65X25/28	99->	38145276	**C773**	
1.9 SDI / TDI	8X28,5X29	99->	058109244	**C786**	
1.9 SDI / TDI	28,5X29X47	99->	038109244E	**C789**	
1.9 TDI/ SYNCRO	8,3x28,5x34	01->	045109244A	**C783**	
1.9 TDI	40x36	03->	038109244J	**C784**	
MALAGA					
1.2	10x59x26/31	85-93	021012060 A	**C812**	
1.2 i	10x59x26/31	89-93	021012060 A	**C812**	
1.5	10x59x26/31	85-93	021012060 A	**C812**	
1.5 i Cat.	10x59x26/31	86-93	021012060 A	**C812**	
1.7 Diesel	10,5x65x33/48	83-92	5966001	**C519**	SUPERIORE
1.7 Diesel	25x70,5x33	83-92	XO 43552140	**C518**	INFERIORE
RONDA					
1.2	10x59x26/31	83-86	021012060 A	**C812**	
1.5	10x59x26/31	84-86	021012060 A	**C812**	
1.6	25x67x28	77->	4443703	**C515**	FISSO
2.0 CRONO	25x70,5x28	84->	4443446	**C514**	FISSO
1.7 Diesel	25x70,5x33	80-83	XO43552140	**C518**	SUPERIORE
1.7 Diesel	25x70,5x33	80-83	XO43552140	**C518**	INFERIORE
1.7 Diesel	10,5x65x33/48	84-92	5966001	**C519**	SUPERIORE
1.7 Diesel	25x70,5x33	84-92	XO43552140	**C518**	INFERIORE
TOLEDO					
1.9 Diesel- Turbo Diesel	10x72/82x30/35	91->	068109243 F	**C730**	MOBILE
1.6-2.0	10x72/83x25/28	91->	026109243 E	**C731**	MOBILE
1.6	17x70x26	91-98	030145299C	**C757**	FISSO
TOLEDO I					
1.6 i /1.8 i /1.9 Diesel / 1.9 SDI/ 1.9 TD/TDI	M8x1,25x78x26	91-99	028145278E	**C774**	
1.8 16V	11x72/82x30/33	91-99	051109243	**C804**	
1.9 TDI	8x28,5x29/31,5	95-99	028109244	**C787**	
1.9 D -1.9 TD	67/68x30/40,3	91-99	028109243 F	**C803**	
1.9 SDI - 1.9 TDI	67/68x30/40,3	95-99	028109243 F	**C803**	
2.0 i/ 2.0 i 16 v	M8x1,25x78x26	91-99	028145278E	**C774**	
TOLEDO II					
1.9 TDI	10x80x29/47	99->	038109244B	**C788**	FISSO
1.9 TDI	8X28,5X29	99->	058109244	**C786**	
1.9 TDI	8X65X25/28	99->	38145276	**C773**	
1.9 TDI	28,5X29X47	99->	038109244E	**C789**	
1.9 TDI	8,3x28,5x34	00->	045109244A	**C783**	
1.9 TDI	40x36	03->	038109244J	**C784**	

TENDICINGHIA DISTRIBUZIONE
BELT TIGHTENERS
TENDEURS DE COURROIE

SKODA

MODELLO	DIMENSIONI	ANNO	RIF ORIGINALE	RIF CORAM	NOTE
FABIA					
1.9 SDI	8X28,5X29	99->	058109244	**C786**	
1.9 SDI	10x80x29/47	99->	038109244B	**C788**	FISSO
1.9 SDI/ Combi / Tre volumi	8X28,5X29	00->	058109244	**C786**	
1.9 SDI/ Combi / Praktik/ Tre volumi	28,5X29X47	99->	038109244E	**C789**	
1.9 TDI/ Combi / Tre volumi	8,3x28,5x34	00->	045109244A	**C783**	
1.9 Combi / Tre volumi	10x80x29/47	00->	038109244B	**C788**	FISSO
1.9 SDI Praktik	10x80x29/47	03->	038109244H	**C788**	FISSO
1.4 TDI/1.9 TDI/ RS/ COMBI	40x36	00->	038109244J	**C784**	
FELICIA					
1.6	17x70x26	95-98	030145299C	**C757**	FISSO
OCTAVIA					
1.6	17x70x26	97->	030145299C	**C757**	FISSO
1.9 SDI/TDI/4X4	8X65X25/28	96-00	38145276	**C773**	
1.9 SDI/TDI	8X28,5X29	96->	058109244	**C786**	
1.9 SDI	M8x1,25x78x26	96->	028145278E	**C774**	
1.9 SDI	8x28,5x29/31,5	96->	028109244	**C787**	
1.9 SDI	28,5X29X47	97->	038109244E	**C789**	
1.9 TDI	28,5X29X48	96->	038109244E	**C789**	
1.9 TDI Combi	8X28,5X29	98->	058109244	**C786**	
1.9 TDI 4X4 Combi	8X28,5X29	99->	058109244	**C786**	
1.9 TDI 4X4 Combi	8,3x28,5x34	00->	045109244A	**C783**	
1.9 TDI/ 4X4	40x36	03->	038109244J	**C784**	
1.9 SDI/TDI	10x80x29/47	96->	038109244B	**C788**	FISSO
1.9 Combi SDI / TDI	10x80x29/47	98->	038109244B	**C788**	FISSO
1.9 Combi SDI / TDI	28,5X29X48	98->	038109244E	**C789**	
1.9 Combi TDI 4x4	10x80x29/47	99-00	038109244B	**C788**	FISSO
1.9 Combi TDI 4x4	28,5X29X48	99-00	038109244E	**C789**	
SUPERB					
1.9 TDI	8,3x28,5x34	02->	045109244A	**C783**	
1.9 TDI	40x36	02->	038109244J	**C784**	
SUPERB (3U4)					
1.9 TDI	60,5x19,5	02->	058260511	**C795**	
2.8 V6	72x32,5	02->	078109243Q	**C801**	
2.8 V6	10,3x59/66x35,5	02->	078109244 J	**C802**	

TENDICINGHIA DISTRIBUZIONE
BELT TIGHTENERS
TENDEURS DE COURROIE

SUZUKI

MODELLO	DIMENSIONI	ANNO	RIF ORIGINALE	RIF CORAM	NOTE
CAPPUCINO					
0.7	42x28/34,5	92-95	94580139	**C808**	
VITARA					
1.9 Turbo Diesel	60x34	96->	LHP-100590	**C545**	MOBILE
1.9 Turbo Diesel	60x34	96->	LHP-100070	**C546**	FISSO

VAUXHALL

ASTRA					
1.6 D 2volumi/coda spiovente	20x69/80,5x31/59	82-86	636421	**C810**	
1.6 D Station Wagon	20x69/80,5x31/59	82-86	636421	**C810**	
ASTRA II					
1.7 Diesel Familiare/Coda spiovente	59x26/33,5	89-91	5636738	**C775**	
2.0 GTE 16V	59x26/33,5	88-91	5636738	**C775**	
2.0 16V Coda spiovente	8x63/69x29,5	88-91	636416	**C777**	
ASTRA III					
1.7 Diesel Familiare	59x26/33,5	91-94	5636738	**C775**	
1.7 Diesel/Turbo Diesel	59x26/33,5	92-98	5636738	**C775**	
1.7 Diesel/Turbo Diesel/Coda spiovente	59x26/33,5	89-98	5636738	**C775**	
1.7 Turbo Diesel / 1.8i 16V/ 2.0i 16V/ Familiare	59x26/33,5	94-98	5636738	**C775**	
1.8 16 V Cabriolet	59x26/33,5	94-01	5636738	**C775**	
1.8 i 16 V	59x26/33,5	93-98	5636738	**C775**	
1.8i 16V Coda spiovente/2.0i 16V Coda spiovente	59x26/33,5	91-98	5636738	**C775**	
2.0 i 16 V	59x26/33,5	95-98	5636738	**C775**	
1.8 16 V Cabriolet	8x52/58x29,5	94-01	5636425	**C776**	
1.8 i 16 V	8x52/58x29,5	93-96	5636425	**C776**	
1.8 i 16 V Coda spiovente/Familiare	8x52/58x29,5	94-98	5636425	**C776**	
2.0 i 16 V	8x52/58x29,5	95-98	5636425	**C776**	
2.0 i 16 V Coda spiovente/Familiare	8x52/58x29,5	91-98	5636425	**C776**	
2.0 i 16 V Coda spiovente/Familiare	8x63/69x29,5	91-98	636416	**C777**	

TENDICINGHIA DISTRIBUZIONE
BELT TIGHTENERS
TENDEURS DE COURROIE

follows VAUXHALL

MODELLO	DIMENSIONI	ANNO	RIF ORIGINALE	RIF CORAM	NOTE
ASTRA IV					
1.7 Turbo Diesel/Coda spiovente/Familiare	59x26/33,5	98-00	5636738	**C775**	
2.0 16V/ Coda spiovente	59x26/33,5	98->	5636738	**C775**	
ASTRA Mk II					
1.6 D 2 volumi	61/71,5x31/58,5	84-89	636422	**C809**	
1.6 D 2 volumi	20x69/80,5x31/59	84-89	636421	**C810**	
1.6 D Belmont	61/71,5x31/58,5	85-91	636422	**C809**	
1.6 D Belmont	20x69/80,5x31/59	85-91	636421	**C810**	
1.6 D Station Wagon	61/71,5x31/58,5	84-89	636422	**C809**	
1.6 D Station Wagon	20x69/80,5x31/59	84-89	636421	**C810**	
1.7 D Belmont	61/71,5x31/58,5	89-91	636422	**C809**	
1.7 D Station Wagon	61/71,5x31/58,5	89-91	636422	**C809**	
ASTRA Mk III					
1.7 D	61/71,5x31/58,5	92-92	636422	**C809**	
1.7 D 2 volumi/Coda Spiovente	61/71,5x31/58,5	91-98	636422	**C809**	
1.7 D Station wagon	61/71,5x31/58,5	91-98	636422	**C809**	
ASTRAVAN III					
1.7 Diesel/Turbo Diesel	59x26/33,5	91-98	5636738	**C775**	
ASTRAVAN IV					
1.7 Diesel/Turbo Diesel	59x26/33,5	91-98	5636738	**C775**	
CALIBRA					
2.0i 16v/ 4x4/ Turbo 4x4	59x26/33,5	90-97	5636738	**C775**	
2.0i 16v/ 4x4/ Turbo 4x4	8x52/58x29,5	90-97	5636425	**C776**	
2.0i 16v/ 4x4/ Turbo 4x4	8x63/69x29,5	90-97	636416	**C777**	
CAVALIER III					
1.7 Diesel	59x26/33,5	92-95	5636738	**C775**	
1.7 Diesel Coda spiovente / 2.0i 16V	59x26/33,5	88-95	5636738	**C775**	
2.0 Sri 16V	59x26/33,5	93-95	5636738	**C775**	
2.0i 16V 4x4 Coda spiovente	59x26/33,5	92-93	5636738	**C775**	
2.0i 16V/4x4	59x26/33,5	88-95	5636738	**C775**	
2.0i Turbo 4x4	59x26/33,5	92-94	5636738	**C775**	
2.0i 16V/4x4/ Turbo 4x4/ Sri 16v/Coda spiovente	8x52/58x29,5	88-95	5636425	**C776**	
2.0i 16V/4x4/ Turbo 4x4/ Coda spiovente	8x63/69x29,5	88-95	636416	**C777**	

follows VAUXHALL

MODELLO	DIMENSIONI	ANNO	RIF ORIGINALE	RIF CORAM	NOTE
CAVALIER Mk II					
1.6 D - 1.6 D 2volumi/coda spiovente	61/71,5x31/58,5	82-88	636422	**C809**	
1.6 D - 1.6 D 2volumi/coda spiovente	20x69/80,5x31/59	82-88	636421	**C810**	
1.6 D Station Wagon	61/71,5x31/58,5	82-88	636422	**C809**	
1.6 D Station Wagon	20x69/80,5x31/59	82-88	636421	**C810**	
CAVALIER Mk III					
1.7 D	61/71,5x31/58,5	88-92	636422	**C809**	
1.7 D 2 volumi/coda spiovente	61/71,5x31/58,5	88-92	636422	**C809**	
FRONTERA					
2.2i	59x26/33,5	95-98	5636738	**C775**	
2.2i / MK II	8x52/58x29,5	95-98	5636425	**C776**	
MOVANO					
2.2 DTI	17x60x25,5	00->	7700102931	**C752**	PULEGGIA
MOVANO Chassis/Cab					
2.2 DTI	17x60x25,5	00->	4410595	**C752**	
MOVANO Combi					
2.2 DTI	17x60x25,5	00->	4410595	**C752**	
MOVANO Van					
2.2 DTI	17x60x25,5	00->	4410595	**C752**	
OMEGA					
2.0 16v/ Familiare	59x26/33,5	94-99	5636738	**C775**	
2.0 16v/ Familiare	8x52/58x29,5	94-99	5636425	**C776**	
SINTRA					
2.2 i 16v	59x26/33,5	96-99	5636738	**C775**	
2.2 i 16v	8x52/58x29,5	96-99	5636425	**C776**	

TENDICINGHIA DISTRIBUZIONE
BELT TIGHTENERS
TENDEURS DE COURROIE

follows VAUXHALL

MODELLO	DIMENSIONI	ANNO	RIF ORIGINALE	RIF CORAM	NOTE
VECTRA					
1.8 i 16v/ 2.0i 16v/ Coda spiovente	59x26/33,5	95-00	5636738	**C775**	
1.8 i 16v/2.0i 16v Familiare	59x26/33,5	96-00	5636738	**C775**	
1.8 i 16v/2.0i 16v Familiare	8x52/58x29,5	95-00	5636425	**C776**	
2.2 i 16V/ Familiare	8x52/58x29,5	00->	5636425	**C776**	
VIVARO					
Furgonato 2.0 16V	17x60x25,5	01->	4410595	**C752**	

WOLGA

GAZ					
	12x82x29,5x30		4061308080-21	**C755**	PULEGGIA

3

TENDICINGHIA DISTRIBUZIONE
BELT TIGHTENERS
TENDEURS DE COURROIE

WOLKSWAGEN

MODELLO	DIMENSIONI	ANNO	RIF ORIGINALE	RIF CORAM	NOTE
BORA					
1.9 SDI	10x80x29/47	98->	038109244B	**C788**	FISSO
1.9 TDI	10x80x29/47	98-01	038109244B	**C788**	FISSO
1.9 SDI /TDI	8X28,5X29	98-01	058109244	**C786**	
1.9 SDI /TDI	8X65X25/28	98-01	38145276	**C773**	
1.9 SDI /TDI	28,5X29X47	98-01	038109244E	**C789**	
2.3 V5 / 4 MOTION	8X65X25/28	98-00	38145276	**C773**	
1.9 TDI	8,3x28,5x34	98-01	045109244A	**C783**	
1.9 TDI 4motion/SW	8X28,5X29	99-01	058109244	**C786**	
1.9 TDI 4motion/SW	28,5X29X47	99-01	038109244E	**C789**	
1.9 TDI 4motion/Familiare/4motion	8,3x28,5x34	99-01	045109244A	**C783**	
1.9 TDI 4motion/Familiare/4motion	40X36	00->	038109244J	**C784**	
1.9 TDI 4motion	10x80x29/47	99-01	038109244B	**C788**	FISSO
1.9 TDI Station wagon	10x80x29/47	99-01	038109244B	**C788**	FISSO
CADDY					
1.6 Diesel	10x72/82x30/35	89->	068109243 F	**C730**	MOBILE
1.5-1.6-1.8	10x72/83x25/28	82->	026109243 E	**C731**	
CADDY II Furgonato					
1.9 TDI	8X28,5X29	96-04	058109244	**C786**	
1.9 Diesel/SDI / 1.6	M8x1,25x78x26	95->	028145278E	**C774**	
1.7 SDI	8x28,5x29/31,5	96-00	028109244	**C787**	
1.9 TDI	8x28,5x29/31,5	96-04	028109244	**C787**	
1.9 SDI	8x28,5x29/31,5	95-04	028109244	**C787**	
1.9 SDI/ 1.9 SDI SW	28,5X29X47	95-04	038109244E	**C789**	
1.9 TDI/SDI	10x80x29/47	95-04	038109244B	**C788**	FISSO
1.9 D - 1.9 SDI	67/68x30/40,3	95-04	028109243 F	**C803**	
1.9 TDI	67/68x30/40,3	96-04	028109243 F	**C803**	
1.9 TDI	28,5X29X47	96-04	038109244E	**C789**	
CADDY II Station wagon					
1.9 SDI	10x80x29/47	95-04	038109244B	**C788**	FISSO
1.9 D - 1.9 SDI	67/68x30/40,3	95-04	028109243 F	**C803**	
1.9 TDI	67/68x30/40,3	96-04	028109243 F	**C803**	
CORRADO					
1.8-2.0	10x72/83x25/28	88-94	026109243 E	**C731**	
1.8 16V	11x72/82x30/33	89-92	051109243	**C804**	
1.8 G60	8,4x90x25/30	88-93	037145276	**C806**	
2.0 i 16V	11x72/82x30/33	91-95	051109243	**C804**	
2.0/ 2.0i 16v	M8x1,25x78x26	91-95	028145278E	**C774**	

TENDICINGHIA DISTRIBUZIONE
BELT TIGHTENERS
TENDEURS DE COURROIE

follows WOLKSWAGEN

MODELLO	DIMENSIONI	ANNO	RIF ORIGINALE	RIF CORAM	NOTE
GOLF					
1.5-1.6-1.9 Diesel-Turbo Diesel	10x72/82x30/35	77->	068109243 F	**C730**	
1.4-1.5-1.6-1.7-1.8-2.0	10x72/83x25/28	75->	026109243 E	**C731**	
1.6	17x70x26	95->	030145299C	**C757**	FISSO
Cabriolet 1.6/1.8/1.9 TDI/2.0	M8x1,25x78x26	93-98	028145278E	**C774**	
GOLF II					
1.8 GTI 16V	11x72/82x30/33	86-91	051109243	**C804**	
1.8 GTI G60 Syncro	8,4x90x25/30	88-91	037145276	**C806**	
1.8 GTI G60	8,4x90x25/30	90-91	037145276	**C806**	
GOLF III					
1.6	M8x1,25x78x26	92-97	028145278E	**C774**	
1.8/Syncro	M8x1,25x78x26	91-97	028145278E	**C774**	
1.9 Diesel/SDI/TD/GTD/TDI/ 2.0/GTI 16v	M8x1,25x78x26	91-97	028145278E	**C774**	
1.9 D /VARIANT	8x28,5x29/31,5	91-97	028109244	**C787**	
1.9 D - 1.9 TD,GTD	67/68x30/40,3	91-97	028109243 F	**C803**	
1.9 SDI	67/68x30/40,3	97-97	028109243 F	**C803**	
1.9 TDI	67/68x30/40,3	93-97	028109243 F	**C803**	
1.9 TDI Syncro (1HX1)	67/68x30/40,3	95-97	028109243 F	**C803**	
1.9 SDI/VARIANT	8x28,5x29/31,5	97-99	028109244	**C787**	
1.9 TDI(81KW)/CABRIO/VARIANT	8x28,5x29/31,5	96-99	028109244	**C787**	
1.9 TDI /SINCRO/CABRIO/VARIANT	8x28,5x29/31,5	93-99	028109244	**C787**	
2.0 GTI 16V	11x72/82x30/33	92-97	051109243	**C804**	
GOLF III VARIANT					
1.6/1.8/2.0 /SINCRO	M8x1,25x78x26	93-99	028145278E	**C774**	
1.9/ 1.9 SDI/TD/TDI	M8x1,25x78x26	93-99	028145278E	**C774**	
1.9 TDI/ 4motion	8,3x28,5x34	99-01	045109244A	**C783**	
1.9 D - 1.9 TD	67/68x30/40,3	93-99	028109243 F	**C803**	
1.9 TDI	67/68x30/40,3	94-99	028109243 F	**C803**	
1.9 SDI	67/68x30/40,3	97-99	028109243 F	**C803**	
1.9 TDI Syncro	67/68x30/40,3	95-99	028109243 F	**C803**	
GOLF III Cabriolet (1E7)					
1.9 TDI	67/68x30/40,3	95-98	028109243 F	**C803**	
GOLF IV					
1.9 SDI/TDI/4 MOTION	8X65X25/28	97-01	38145276	**C773**	
2.3 V5 /4 MOTION	8X65X25/28	97-00	38145276	**C773**	
1.9 TDI	8,3x28,5x34	98-01	045109244A	**C783**	
1.9 TDI CABRIO	8x28,5x29/31,5	98->	028109244	**C787**	

TENDICINGHIA DISTRIBUZIONE
BELT TIGHTENERS
TENDEURS DE COURROIE

follows WOLKSWAGEN

MODELLO	DIMENSIONI	ANNO	RIF ORIGINALE	RIF CORAM	NOTE
GOLF IV					
1.9 SDI	8X28,5X29	97->	058109244	**C786**	
1.9 SDI	28,5X29X47	97->	038109244E	**C789**	
1.9 TDI	28,5X29X47	97-01	038109244E	**C789**	
1.9 TDI 4motion	28,5X29X47	98-01	038109244E	**C789**	
1.9 TDI 4motion	8,3x28,5x34	99-01	045109244A	**C783**	
1.9 TDI/4motion	8X28,5X29	97-01	058109244	**C786**	
1.9 TDI/ 4motion	40X36	00->	038109244J	**C784**	
1.9 SDI/TDI	10x80x29/47	97-01	038109244B	**C788**	FISSO
1.9 TDI 4motion	10x80x29/47	98-01	038109244B	**C788**	FISSO
GOLF IV VARIANT					
1.9 SDI	28,5X29X47	99->	038109244E	**C789**	
1.9 SDI/TDI/4 MOTION	8X28,5X29	99->	058109244	**C786**	
1.9 SDI	10x80x29/47	99->	038109244B	**C788**	FISSO
1.9 TDI	28,5X29X47	99-01	038109244E	**C789**	
1.9 TDI/4motion	40X36	00->	038109244J	**C784**	
1.9 TDI	10x80x29/47	99-01	038109244B	**C788**	FISSO
1.9 TDI 4motion	10x80x29/47	99-01	038109244B	**C788**	FISSO
1.9 TDI 4motion	28,5X29X47	99-01	038109244E	**C789**	
GOLF IV CABRIOLET					
1.6 - 1.8 - 1.9 TDI - 2.0	M8x1,25x78x26	98->	028145278 E	**C774**	
1.9 TDI	67/68x30/40,3	98->	028109243 F	**C803**	
1.9 TDI	15x77/83x23	98-02	028145278 J	**C807**	
GOLF V					
1.9 TDI/2.0 SDI	40X36	03->	038109244J	**C784**	
JETTA					
1.4-1.5-1.6-1.7-1.8-2.0	10x72/83x25/28	75->	026109243 E	**C731**	
1.6 Diesel-Turbo Diesel	10x72/82x30/35	81->	068109243 F	**C730**	MOBILE
JETTA II					
1.8 16V	11x72/82x30/33	86-91	051109243	**C804**	
LT					
2.0	10x72/83x25/28	76->	026109243 E	**C731**	MOBILE
2.4 (Pompa olio)	8,2x74,5x27/35	79->	069109243B	**C729**	MOBILE

follows WOLKSWAGEN

MODELLO	DIMENSIONI	ANNO	RIF ORIGINALE	RIF CORAM	NOTE
LT 28-35 II Autobus					
2.5 SDI	8,4x90x25/30	96->	037145276	**C806**	
2.5 TDI	8,4x90x25/30	96->	037145276	**C806**	
LT 28-35 II Furgonato					
2.5 SDI	8,4x90x25/30	96->	037145276	**C806**	
2.5 TDI	8,4x90x25/30	96->	037145276	**C806**	
LT 28-46 II Pianale piatto					
2.5 SDI	8,4x90x25/30	96->	037145276	**C806**	
2.5 TDI	8,4x90x25/30	96->	037145276	**C806**	
LUPO					
1.2 TDI 3L/ 1.4 TDI	8,3x28,5x34	99->	045109244A	**C783**	
1.4 TDI	40X36	99->	038109244J	**C784**	
1.7 SDI	8x28,5x29/31,5	98->	028109244	**C787**	
MULTIVAN					
1.9 TDI	40X36	03->	038109244J	**C784**	
NEW BEETLE					
1.9 TDI	8X28,5X29	98-01	058109244	**C786**	
1.9 TDI	8X65X25/28	98-01	38145276	**C773**	
1.9 TDI	28,5X29X47	98-01	038109244E	**C789**	
1.9 TDI	10x80x29/47	98-01	038109244B	**C788**	FISSO
2.3 V5	8X65X25/28	00->	38145276	**C773**	
1.9 TDI	8,3x28,5x34	01->	045109244A	**C783**	
1.9 TDI	40X36	01->	038109244J	**C784**	
PASSAT					
1.3-1.5-1.6-1.8-1.9-2.0	10x72/83x25/28	75->	026109243 E	**C731**	MOBILE
PASSAT (3B2)					
1.6 - 1.8	60,5x19,5	96-00	058260511	**C795**	

follows WOLKSWAGEN

MODELLO	DIMENSIONI	ANNO	RIF ORIGINALE	RIF CORAM	NOTE
PASSAT					
1.6 TD	M8x1,25x78x26	82-96	028145278E	**C774**	
1.6 TD Tre volumi	M8x1,25x78x26	85-88	028145278E	**C774**	
1.6 Diesel Turbo Diesel -1.9 Diesel	10x72/82x30/35	81->	068109243 F	**C730**	MOBILE
1.8	M8x1,25x78x26	88-96	028145278E	**C774**	
PASSAT (3B2)					
1.8 T - 1.8 Syncro/4motion	60,5x19,5	96-00	058260511	**C795**	
PASSAT (3A2, 35I)					
1.8 16V	11x72/82x30/33	88-89	051109243	**C804**	
PASSAT					
1.8/1.8T/SINCRO/4 MOTION	8X28,5X29	96-00	058109244	**C786**	
PASSAT (3A2,35I)					
1.8 G60 Syncro	8,4x90x25/30	88-96	037145276	**C806**	
PASSAT					
1.9 TD/TDI	M8x1,25x78x26	91-96	028145278E	**C774**	
PASSAT (3A2,35I)					
1.9 TD	67/68x30/40,3	91-96	028109243 F	**C803**	
1.9 TDI	60,5x19,5	93-96	058260511	**C795**	
1.9 TDI - 1.9 TDI Syncro/4motion	67/68x30/40,3	96-00	028109243 F	**C803**	
PASSAT (3B2)					
1.9 TDI	60,5x19,5	96-00	058260511	**C795**	
PASSAT					
1.9 TDI	8x28,5x29/31,5	93-96	028109244	**C787**	
PASSAT (3A2,35I)					
1.9 TDI	15x77/83x23	96-96	028145278J	**C807**	

TENDICINGHIA DISTRIBUZIONE
BELT TIGHTENERS
TENDEURS DE COURROIE

follows WOLKSWAGEN

MODELLO	DIMENSIONI	ANNO	RIF ORIGINALE	RIF CORAM	NOTE
PASSAT (3B2)					
1.9 TDI	15x77/83x23	96-00	028145278J	**C807**	
1.9 TDI Syncro/4motion	15x77/83x23	96-00	028145278J	**C807**	
PASSAT					
1.9 TDI / 1.9 TDI SYNCRO/4 MOTION	M8x1,25x78x26	96-00	028145278E	**C774**	
1.9 TDI / 1.9 TDI SYNCRO/4 MOTION	8x28,5x29/31,5	96-00	028109244	**C787**	
PASSAT (3B2)					
1.9 TDI 4motion/1.9 TDI Syncro/4motion	60,5x19,5	96-00	058260511	**C795**	
PASSAT					
1.9 TDI	8,3x28,5x34	98-00	045109244A	**C783**	
1.9 TDI 4motion/1.9 TDI/4motion	8,3x28,5x34	99-00	045109244A	**C783**	
2.0 (Pompa olio)	8,2x74,5x27/35	85-89	069109243B	**C729**	MOBILE
PASSAT (3A2,35I)					
2.0 16V	11x72/82x30/33	88-96	051109243	**C804**	
PASSAT					
2.0-2.2	8,2x74,5x27/35	85-89	069109243B	**C729**	FISSO
PASSAT (3B2)					
2.0 - 2.0 4motion	60,5x19,5	00-00	058260511	**C795**	
PASSAT					
2.0 / 2.0 SYNCRO/ 16v	M8x1,25x78x26	90-96	028145278E	**C774**	
2.3 VR5	M8x1,25x78x26	96-00	028145278E	**C774**	
PASSAT (3B3)					
1.6 - 1.8 T 20V - 1.9 TDI - 1.9 TDI 4motion	60,5x19,5	00->	058260511	**C795**	
2.0 - 2.0 4motion	60,5x19,5	00->	058260511	**C795**	
2.0 TDI	60,5x19,5	03->	058260511	**C795**	

follows WOLKSWAGEN

MODELLO	DIMENSIONI	ANNO	RIF ORIGINALE	RIF CORAM	NOTE
PASSAT (3B2)					
2.8 V6 - 2.8 V6 Syncro/4motion	72x32,5	96-00	078109243Q	**C801**	
2.8 V6 - 2.8 V6 Syncro/4motion	10,3x59/66x35,5	96-00	078109244 J	**C802**	
PASSAT (3B3)					
2.8 4motion	72x32,5	00->	078109243Q	**C801**	
2.8 4motion	10,3x59/66x35,5	00->	078109244 J	**C802**	
PASSAT VARIANT					
1.6 TD	M8x1,25x78x26	82-95	028145278E	**C774**	
1.8	M8x1,25x78x26	88-97	028145278E	**C774**	
1.8	8X28,5X29	97-00	058109244	**C786**	
1.6 - 1.8 (3B5)	60,5x19,5	97-00	058260511	**C795**	
1.8 16V	11x72/82x30/33	88-89	027109243	**027109243**	
1.8 G60 Syncro	8,4x90x25/30	88-97	037145276	**C806**	
1.8 Syncro/4motion - 1.8 T (3B5)	60,5x19,5	97-00	058260511	**C795**	
1.9 TD	67/68x30/40,3	91-97	028109243 F	**C803**	
1.9 TDI	M8x1,25x78x26	91-97	028145278E	**C774**	
1.9 TDI	8x28,5x29/31,5	93-97	028109244	**C787**	
PASSAT VARIANT (3B5)					
1.9 TDI	15x77/83x23	97-00	028145278J	**C807**	
PASSAT VARIANT					
1.9 TDI (3A5,35I)	15x77/83x23	96-97	028145278J	**C807**	
1.9 TDI (3A5,35I)	67/68x30/40,3	93-97	028109243 F	**C803**	
PASSAT VARIANT (3B5)					
1.9 TDI Syncro/4motion	15x77/83x23	97-00	028145278J	**C807**	
PASSAT VARIANT					
1.9 TDI -1.9 TDI Syncro/4motion	67/68x30/40,3	97-00	028109243 F	**C803**	
1.9 TDI (3B5)	60,5x19,5	97-00	058260511	**C795**	
1.9 TDI (3A5,35I)	60,5x19,5	93-97	058260511	**C795**	
1.9 TDI / SYNCRO/ 4 MOTION	M8x1,25x78x26	97-00	028145278E	**C774**	
1.9 TDI / SYNCRO/ 4 MOTION	8x28,5x29/31,5	97-00	028109244	**C787**	
1.9 TDI 4motion (3B5)	60,5x19,5	99-00	058260511	**C795**	

TENDICINGHIA DISTRIBUZIONE
BELT TIGHTENERS
TENDEURS DE COURROIE

follows WOLKSWAGEN

MODELLO	DIMENSIONI	ANNO	RIF ORIGINALE	RIF CORAM	NOTE
PASSAT VARIANT (3B5)					
1.9 TDI Syncro/4motion	60,5x19,5	97-00	058260511	**C795**	
PASSAT VARIANT					
1.9 TDI/4motion	8,3x28,5x34	99-00	045109244A	**C783**	
1.9 TDI / 4motion	40X36	00->	038109244J	**C784**	
2.0 /SYNCRO/ 16V	M8x1,25x78x26	90-97	028145278E	**C774**	
2.0 TDI	40X36	03->	038109244J	**C784**	
2.0 16V	11x72/82x30/33	94-97	051109243	**C804**	
PASSAT VARIANT (3B6)					
1.6 - 1.8 T 20V - 1.9 TDI - 1.9 TDI 4motion	60,5x19,5	00->	058260511	**C795**	
PASSAT VARIANT (3B5)					
2.0 - 2.0 4motion	60,5x19,5	00-00	058260511	**C795**	
PASSAT VARIANT (3B6)					
2.0 - 2.0 4motion	60,5x19,5	00->	058260511	**C795**	
2.0 TDI	60,5x19,5	03->	058260511	**C795**	
PASSAT VARIANT (3B5)					
2.8 V6 - 2.8 V6 Syncro/4motion	72x32,5	97-00	078109243Q	**C801**	
2.8 V6 - 2.8 V6 Syncro/4motion	10,3x59/66x35,5	97-00	078109244 J	**C802**	
PASSAT VARIANT (3B6)					
2.8 4motion	72x32,5	00->	078109243Q	**C801**	
2.8 4motion	10,3x59/66x35,5	00->	078109244 J	**C802**	
POLO					
1.6	10x72/83x25/28	95->	026109243 E	**C731**	
1.4-1.6	17x70x26	95->	030145299C	**C757**	FISSO
1.9 Diesel	M8x1,25x78x26	94-01	028145278E	**C774**	
1.4 TDI	8,3x28,5x34	99-01	045109244A	**C783**	
1.4 TDI/1.9 TDI / Tre volumi	40X36	99-03	038109244J	**C784**	
1.7 SDI	8x28,5x29/31,5	97-01	028109244	**C787**	
1.9 SDI	8x28,5x29/31,5	96-01	028109244	**C787**	
1.9 SDI	28,5X29X47	01->	038109244E	**C789**	
1.9 SDI	10x80x29/47	01->	038109244H	**C788**	FISSO
1.9 SDI Tre volumi	10x80x29/47	03->	038109244H	**C788**	FISSO
1.9 SDI Tre volumi	28,5X29X48	03->	038109244E	**C789**	

TENDICINGHIA DISTRIBUZIONE
BELT TIGHTENERS
TENDEURS DE COURROIE

follows WOLKSWAGEN

MODELLO	DIMENSIONI	ANNO	RIF ORIGINALE	RIF CORAM	NOTE
POLO CLASSIC					
1.9 TDI(81KW)	8X28,5X29	98-01	058109244	**C786**	
1.9 TDI(81KW)	8x28,5x29/31,5	98-01	028109244	**C787**	
1.9SDI	8X28,5X29	99-01	058109244	**C786**	
1.9 TDI(66KW)	8X28,5X29	96-01	058109244	**C786**	
1.9 TDI /SDI	8X65X25/28	96-01	38145276	**C773**	
1.6	M8x1,25x78x26	95-01	028145278E	**C774**	
1.7 SDI / 1.8	M8x1,25x78x26	97-01	028145278E	**C774**	
1.7 SDI	8x28,5x29/31,5	97-01	028109244	**C787**	
57 1.7 SDI	67/68x30/40,3	97-01	028109243 F	**C803**	
1.9 SDI	M8x1,25x78x26	95-01	028145278E	**C774**	
1.9 SDI	8x28,5x29/31,5	95-99	028109244	**C787**	
64 1.9 SDI	67/68x30/40,3	95-99	67/68x30/40,3	**C803**	
1.9 SDI	28,5X29X47	99-01	038109244E	**C789**	
1.9 TDI	M8x1,25x78x26	96-01	028145278E	**C774**	
1.9 TDI	8x28,5x29/31,5	96-01	028109244	**C787**	
1.9 TDI	28,5X29X47	96-01	038109244E	**C789**	
90 1.9 TDI	10x80x29/47	96-01	038109244B	**C788**	FISSO
90 1.9 TDI	67/68x30/40,3	96-01	028109243 F	**C803**	
110 1.9 TDI	10x80x29/47	98-01	038109244B	**C788**	FISSO
110 1.9 TDI	67/68x30/40,3	98-01	028109243 F	**C803**	
68 1.9 SDI	10x80x29/47	99-01	038109244B	**C788**	FISSO
FURGONATO					
1.9 Diesel	M8x1,25x78x26	94->	028145278E	**C774**	
1.7 SDI	8x28,5x29/31,5	97->	028109244	**C787**	
1.9 SDI	8x28,5x29/31,5	96->	028109244	**C787**	
POLO VARIANT					
1.9 TDI(81KW)	8X28,5X29	98-01	058109244	**C786**	
1.9 TDI(66KW)	8X28,5X29	97-01	058109244	**C786**	
1.9 SDI	8X28,5X29	99-01	058109244	**C786**	
1.9 SDI	28,5X29X47	99-01	038109244E	**C789**	
1.7 SDI	67/68x30/40,3	97-01	028109243 F	**C803**	
1.7/1.9 TDI/SDI	8x28,5x29/31,5	97-01	028109244	**C787**	
1.9 TDI	8X65X25/28	97-01	38145276	**C773**	
1.9 TDI	28,5X29X47	97-01	038109244E	**C789**	
1.6/1.7 SDI/1.8/1.9 SDI/TDI	M8x1,25x78x26	97-01	028145278E	**C774**	
1.9 SDI/TDI	10x80x29/47	97-01	038109244B	**C788**	FISSO
1.9 SDI - 1.9 TDI	67/68x30/40,3	97-01	028109243 F	**C803**	
SANTANA					
1.3-1.6-1.8-1.9	10x72/83x25/28	78->	026109243 E	**C731**	
1.6 Diesel Turbo Diesel	10x72/82x30/35	81-88	068109243 F	**C730**	MOBILE
2.0	8,2x74,5x27/35	85-89	069109243B	**C729**	FISSO
2.0 (Pompa olio)	8,2x74,5x27/35	85-89	069109243B	**C729**	MOBILE

TENDICINGHIA DISTRIBUZIONE
BELT TIGHTENERS
TENDEURS DE COURROIE

follows WOLKSWAGEN

MODELLO	DIMENSIONI	ANNO	RIF ORIGINALE	RIF CORAM	NOTE
SCIROCCO					
1.5-1.6-1.7-1.8	10x72/83x25/28	75->	026109243 E	**C731**	
1.8 16V	11x72/82x30/33	85-92	051109243	**C804**	
SHARAN					
1.9 TDI/1.9 TDI 4motion	8,3x28,5x34	00->	045109244A	**C783**	
1.9 TDI/1.9 TDI 4motion	40X36	95-02	038109244J	**C784**	
1.9 TDI	8x28,5x29/31,5	95->	028109244	**C787**	
1.9 TDI	67/68x30/40,3	95-00	028109243 F	**C803**	
1.9 TDI/ 2.0	M8x1,25x78x26	95-00	028145278E	**C774**	
2.0	10x72/83x25/28	96->	026109243 E	**C731**	
TOURAN					
1.9 TDI	40X36	03->	038109244J	**C784**	
TRANSPORTER					
2.5 (Pompa olio)	8,2x74,5x27/35	90->	069109243B	**C729**	MOBILE
1.9 Diesel-Turbo Diesel	10x72/82x30/35	91->	068109243 F	**C730**	MOBILE
1.8-2.0	10x72/83x25/28	91->	026109243 E	**C731**	MOBILE
1.9 Diesel-Turbo Diesel	M8x1,25x78x26	90-92	028145278E	**C774**	
2.0	M8x1,25x78x26	90->	028145278E	**C774**	
2.4 Diesel/ syncro	M8x1,25x78x26	90-97	028145278E	**C774**	
2.5 / 2.5 syncro/TDI	M8x1,25x78x26	90-96	028145278E	**C774**	
Furgonato 1.9 Diesel / Turbo Diesel	M8x1,25x78x26	90-92	028145278E	**C774**	
Furgonato 2.0 / 2.4/ Diesel/ Syncro	M8x1,25x78x26	90-97	028145278E	**C774**	
Furgonato 2.5 / Syncro / TDI	M8x1,25x78x26	90-96	028145278E	**C774**	
Pianale piatto 1.9 Diesel /Turbo Diesel	M8x1,25x78x26	90-92	028145278E	**C774**	
Pianale piatto 2.0	M8x1,25x78x26	90->	028145278E	**C774**	
Pianale piatto 2.4 Diesel/ Syncro	M8x1,25x78x26	90-92	028145278E	**C774**	
Pianale piatto 2.5 /Syncro/ TDI	M8x1,25x78x26	90-96	028145278E	**C774**	
1.9 TDI/ Pianale piatto/Autotelaio	40X36	03->	038109244J	**C784**	
TRANSPORTER IV					
Autobus 1.9 D	67/68x30/40,3	90->	028109243 F	**C803**	
Autobus 1.9 TD	67/68x30/40,3	92->	028109243 F	**C803**	
Autobus 2.0 - 2.4 D Syncro	8,4x90x25/30	90->	037145276	**C806**	
Autobus 2.4 D Syncro	8,4x90x25/30	92->	037145276	**C806**	
Autobus 2.5	8,4x90x25/30	90->	037145276	**C806**	
Autobus 2.5 Syncro	8,4x90x25/30	92->	037145276	**C806**	
Autobus 2.5 TDI	8,4x90x25/30	95->	037145276	**C806**	
Autobus 2.5 TDI Syncro	8,4x90x25/30	96->	037145276	**C806**	
Furgonato 1.9 D	67/68x30/40,3	90->	028109243 F	**C803**	
Furgonato 1.9 TD	67/68x30/40,3	92->	028109243 F	**C803**	
Furgonato 2.0 - 2.4 D	8,4x90x25/30	90->	037145276	**C806**	

TENDICINGHIA DISTRIBUZIONE
BELT TIGHTENERS
TENDEURS DE COURROIE

follows WOLKSWAGEN

MODELLO	DIMENSIONI	ANNO	RIF ORIGINALE	RIF CORAM	NOTE
TRANSPORTER IV					
Furgonato 2.4 D Syncro	8,4x90x25/30	92->	037145276	**C806**	
Furgonato 2.5	8,4x90x25/30	90->	037145276	**C806**	
Furgonato 2.5 Syncro	8,4x90x25/30	92->	037145276	**C806**	
Furgonato 2.5 TDI - 2.5 TDI Syncro	8,4x90x25/30	95->	037145276	**C806**	
Pianale piatto/Telaio 1.9 D	67/68x30/40,3	90->	028109243 F	**C803**	
Pianale piatto/Telaio 1.9 TD	67/68x30/40,3	92->	028109243 F	**C803**	
Pianale piatto 2.0 - 2.4 D	8,4x90x25/30	90->	037145276	**C806**	
Pianale piatto 2.4 D Syncro	8,4x90x25/30	92->	037145276	**C806**	
Pianale piatto 2.5	8,4x90x25/30	90->	037145276	**C806**	
Pianale piatto 2.5 Syncro	8,4x90x25/30	92->	037145276	**C806**	
Pianale piatto 2.5 TDI	8,4x90x25/30	95->	037145276	**C806**	
Pianale piatto 2.5 TDI Syncro	8,4x90x25/30	98->	037145276	**C806**	
VARIANT					
1.4 16V	8X65X25/28	99->	38145276	**C773**	
1.9 TDI / 4 MOTION	8X65X25/28	97-01	38145276	**C773**	
2.3 V5 / 4 MOTION	8X65X25/28	99-01	38145276	**C773**	
VENTO					
1.9 D	8x28,5x29/31,5	91-98	028109244	**C787**	
1.9 Diesel Turbo Diesel	10x72/82x30/35	92->	068109243 F	**C730**	
1.6-1.8-2.0	10x72/83x25/28	90->	026109243 E	**C731**	
1.4-1.6	17x70x26	95->	030145299C	**C757**	FISSO
1.6	M8x1,25x78x26	94-98	028145278E	**C774**	
1.8	M8x1,25x78x26	91-98	028145278E	**C774**	
1.9	M8x1,25x78x26	97-98	028145278E	**C774**	
1.9 D - 1.9 TD	67/68x30/40,3	91-98	028109243 F	**C803**	
1.9 TDI	M8x1,25x78x26	93-98	028145278E	**C774**	
1.9 TDI	67/68x30/40,3	93-98	028109243 F	**C803**	
1.9 TDI(66KW)	8x28,5x29/31,5	93-98	028109244	**C787**	
1.9 TDI(110KW)	8x28,5x29/31,5	96-98	028109244	**C787**	
1.9 SDI	8x28,5x29/31,5	97-98	028109244	**C787**	
1.9 SDI	67/68x30/40,3	97-98	028109243 F	**C803**	
2.0	M8x1,25x78x26	91-98	028145278E	**C774**	

TENDICINGHIA DISTRIBUZIONE
BELT TIGHTENERS
TENDEURS DE COURROIE

VOLVO

MODELLO	DIMENSIONI	ANNO	RIF ORIGINALE	RIF CORAM	NOTE
240-260					
2.4 Diesel	8,2x74,5x27/35	79-93	069109243B	**C729**	FISSO
340-360					
1.6 Diesel - 1.7	50x31	85-91	3287776.3	**C701**	MOBILE
1.7	22x50x31	85-91	3342143.9	**C700**	FISSO
1.6 Diesel	10x50x31/37		3342102.5	**C703**	MOBILE
1.6 Diesel	22x50x31		3342143.9	**C700**	FISSO
1.6 Diesel-1.7	50x31	84-91	7700726440	**C706**	MOBILE
1.6 Diesel-1.7	50x31	84-91	7700735486	**C707**	FISSO
440/460					
1.6-1.7-1.7 Turbo-1.8-19 Turbo Diesel-2.0	50x31	88->	7700726440	**C706**	MOBILE
1.6-1.8-2.0	50x31	88->	7700735486	**C707**	FISSO
480					
1.8-1.8 Turbo	50x31		3287776.3	**C701**	MOBILE
1.7-1.7 Turbo Diesel	10x50x31/37	86->	3342102.5	**C703**	MOBILE
1.7-1.7 Turbo-1.8-1.8 Turbo	22x50x31		3342143.9	**C700**	FISSO
1.7-1.7 Turbo-2.0 Turbo	50x31	88->	7700726440	**C706**	MOBILE
1.7-1.7 Turbo-2.0 Turbo	50x31	86->	7700735486	**C707**	FISSO
740					
2.0-2.3	22x50x31	88-90	3342143.9	**C700**	FISSO
2.0-2.3	50x31	88-90	7700735486	**C707**	FISSO
2.4 Diesel Turbo Diesel	8,2x74,5x27/35	83-92	069109243B	**C729**	FISSO
760					
2.4 Turbo Diesel	8,2x74,5x27/35	83-90	069109243B	**C729**	FISSO
780					
2.0 Turbo 16v	50x31	88-90	7700735486	**C707**	FISSO
2.4 Turbo Diesel	8,2x74,5x27/35	86-91	069109243B	**C729**	FISSO
940-960					
2.3	50x31	94->	7700726440	**C706**	MOBILE
2.4 Diesel Turbo Diesel	8,2x74,5x27/35	91-93	069109243B	**C729**	FISSO

TENDICINGHIA DISTRIBUZIONE
BELT TIGHTENERS
TENDEURS DE COURROIE

follows VOLVO

MODELLO	DIMENSIONI	ANNO	RIF ORIGINALE	RIF CORAM	NOTE
S40/V40					
1.9 Turbo Diesel	50x31	96->	7700726440	**C706**	MOBILE
1.9 Turbo Diesel	50x31	96->	7700735486	**C707**	FISSO
1.9 DI	10,2x59x31/32,8	99-00	30865078	**C751**	PULEGGIA
1.9 TD	10,2x59x31/32,8	95-99	30865078	**C751**	PULEGGIA
1.9 DI	17x60x25,5	99-03	7700102931	**C752**	PULEGGIA
S40 I					
1.9 DI	17x60x25,5	00-03	30883834	**C752**	
V40 Station Wagon					
1.9 DI	17x60x25,5	00->	30883834	**C752**	

TENDICINGHIA DISTRIBUZIONE
BELT TIGHTENERS
TENDEURS DE COURROIE
LISTA DI COMPARAZIONE - CROSS REFERENCES - LISTE CORRISPONDANCE

CORAM	APPLICAZIONE	RIF. ORIGINALE	SKF VKM	INA FRANCE	Q.H QTT	LORETT	IRB	SNT	NOTE
C500	ALFA	60504224	12500	123640	124	CR 1652	9800	374310	+STAFFA
C501	ALFA	60504225	12501	123641	125	CR 1653	9801	374312	+STAFFA
C502	ALFA	60586520	12511			CR 1877	9932	374306	+STAFFA
C503	ALFA	60586519	12510			CR 1878	9933	374308	+STAFFA
C504	ALFA	60504226	22510		516	CR 1874	9937		PULEGGIA
C505	FIAT-LANCIA	4427068	12010	45986	137	CR 1659	9850	374142	+STAFFA
C506	FIAT	4438894	12630	45442	139	CR 1658	9825	374140	+STAFFA
C507	FIAT	5952181	22630	45605	138	CR 1657	9840	374143	GHIERA
C508	FIAT	4277048					9845		
C509	FIAT	4320893	12103	123635	140	CR 1661	9851		
C510	FIAT	4178014							
C511	FIAT	4178016							
C512	FIAT-IVECO	4740846	12380	220323	135	CR 1665	9816	374148	
C512	RENAULT	5001001259	22385	220323	135	CR 1665	9816	374148	
C513	FIAT-IVECO	4740847	22380	220324	136	CR 1666	9821	374145	
C513	RENAULT	5001001272	22380	220324	136	CR 1666	9821	374145	
C514	FIAT	4443446	12012		149	CR 1662	9852	374135	
C515	FIAT	4443703	12001	123630	148	CR 1663	9853	374138	
C516	FIAT-LANCIA	4385583	12100	123634	141	CR 1664	9855	374150	
C517	FIAT-LANCIA	4386575	12003	123631	142	CR 1667	9872	374160	
C518	FIAT	7540301	22160	123624	170	CR 1668	9803	374152	
C518	SEAT	XO43552140	22160	123624	170	CR 1668	9803	374152	
C519	FIAT	5966001	12160	201646.1	145	CR 1669			
C521	FIAT	5992517	12163			CR 1649	9830		
C522	ALFA	60805833	12101	220257	143	CR 1646	9818		
C522	FIAT-LANCIA	5997325	12101	203093	143	CR 1646	9818	374165	
C523	ALFA	60800148	12005	123633	223	CR 1672	9823		
C523	FIAT-LANCIA	5956109	12005	123633	223	CR 1672	9823		
C524	LANCIA	7302681		200379.2	160	CR 1674	9833		+ STAFFA
C525	FIAT	5972277	12200	36261	109	CR 1654	9822		
C525	CITROËN	95619217	12200	36261	109	CR 1654	9822		
C525	PEUGEOT	0829,17	12200	36261	109	CR 1654	9822		
C526	FIAT	7553564	12151	123636	221	CR 1644	9819	374180	
C527	FIAT	7553565	22151	123649	144	CR 1645	9820	374179	
C528	ALFA	60811488	22163		224	CR 1854	9835		
C528	FIAT	7596877	22163		224	CR 1854	9835		
C529	ALFA	60811487	22153	123650	159	CR 1834	9889	374192	
C529	FIAT	7596876	22153	123650	159	CR 1834	9889	374192	
C532	FIAT-LANCIA	7541718	12227	123638	179	CR 1673	9832	374177	
C533	FIAT-LANCIA	7596728	12153			CR 1857	9835		
C534	FIAT-LANCIA	7596727	22153		158	CR 1858	9889		
C535	FIAT	5495830	13050	38392	108	CR 1689	9815		
C535	CITROËN-PEUGEOT	0818,17	13050	38392	108	CR 1689	9815		
C536	FIAT-IVECO	7301662		88019.2		CR 1647	9828		+ STAFFA
C537	FIAT-IVECO	7301661		84666.4		CR 1648	9829		+ STAFFA
C538	FIAT	7554724	32016			CR 1445			
C539/F	ALFA	60812645	32009	123755		CR 1444	9187	374183	IN ACCIAIO
C539	ALFA	60812645	32009	123755		CR 1444	9187	374183/P	IN PLASTICA
C539	ALFA	60805460	32009	123755		CR 1444	9187	374183/P	IN PLASTICA
C539	FIAT	7797142	32009	123755		CR 1444	9187	374183/P	IN PLASTICA
C539	FIAT-LANCIA	7702173	32009	123755		CR 1444	9187	374183/P	IN PLASTICA
C539	FIAT-LANCIA	46424716	32009	123755		CR 1444	9187	374183/P	IN PLASTICA
C543	FIAT	46439454		123753		CR 1440		374008	IN ACCIAIO
C543	FIAT	7784613		123753		CR 1440		374008	IN ACCIAIO
C543	FIAT	7749452		123753		CR 1440		374008	IN ACCIAIO
C544	FIAT	46439471		123754		CR 1449		374016	IN ACCIAIO

TENDICINGHIA DISTRIBUZIONE
BELT TIGHTENERS
TENDEURS DE COURROIE
LISTA DI COMPARAZIONE - CROSS REFERENCES - LISTE CORRISPONDANCE

CORAM	APPLICAZIONE	RIF. ORIGINALE	SKF VKM	INA FRANCE	Q.H QTT	LORETT	IRB	SNT	NOTE
C544	FIAT	7733200		123754		CR 1449		374016	IN ACCIAIO
C545	CITROËN-PEUGEOT	0829,33	13241	122216.3	253	CR 1886	9901		+ STAFFA
C545	FIAT	9617188680	13241	122216.3	253	CR 1886	9901		+ STAFFA
C545	ROVER	LHP-100590	13241	122216.3	253	CR 1886	9901		+ STAFFA
C546	CITROËN-PEUGEOT	0830,13	23241	122980	254	CR 1887	9900		+ STAFFA
C546	FIAT	9615923380	23241	122980	254	CR 1887	9900		+ STAFFA
C546	ROVER	LHP-100070	23241	122980	254	CR 1887	9900		+ STAFFA
C600	CITROËN-PEUGEOT	0829,11	13240	122051	105	CR 1686	9813	374503	+STAFFA
C600	CITROËN-PEUGEOT	0829,11	13240	120475.12	105	CR 1686	9813	374503	+ STAFFA
C600	ROVER	LHP-10010	13240	123368.1	105	CR 1686	9813	374503	+STAFFA
C600	LADA	212151006120	13240	123368,1	105	CR1686	9813	374503	+STAFFA
C601	CITROËN-PEUGEOT	0830,02	23240	38073.12	104	CR 1687	9945	374523	+ STAFFA
C601	ROVER	LHP-100009	23240	123369	104	CR 1687	9814	374523	+STAFFA
C601	LADA	212151006138	23240	123369	104	CR 1687	9814	374523	+STAFFA
C602	CITROËN-PEUGEOT	0829,10	16200	37629	107	CR 1688	9817	374327	+ STAFFA
C602	RENAULT	7700692315	16200	37629	107	CR 1688	9817	374327	+ STAFFA
C602	RENAULT	7700627156	16200	37629	107	CR 1688	9817	374327	+ STAFFA
C603	CITROËN	91508298	13200	38317C	103	CR 1685	9812	374507	+ STAFFA
C603	CITROËN-PEUGEOT	0829,12	13200	38317C	103	CR 1685	9812	374507	+ STAFFA
C604	CITROËN	97535002	13100	121287.1	100	CR 1692	9811		INTERCAMBIABILE CON C738
C604	CITREON-PEUGEOT	0829,19	13100	121287.1	100	CR 1692	9811		INTERCAMBIABILE CON C738
C604	CITROËN-PEUGEOT	0829,54	13100	121287.1	100	CR 1692	9811		INTERCAMBIABILE CON C738
C630	FORD	1500004	14300	123643	156	CR 1656	9841	374413	
C631	FORD	1496915	14000	82798	155	CR 1694	9839	374412	+ STAFFA
C650	LADA	21051006118	18200	123648		CR 1860	9912		
C650	LADA	21051006124	18200	123648		CR 1860	9912		
C700	RENAULT	7700696987	26100	38153	113	CR 1844	9887	374540	
C700	VOLVO	3342143-9	26100	38153	113	CR 1844	9887	374540	
C701	RENAULT	7700720366	16100	38950	110	CR 1845	9856		+ STAFFA
C701	VOLVO	3287776.3	16100	38950	110	CR 1845	9856		+STAFFA
C702	RENAULT	7700736085	16000	39924.1	117	CR 1846	9863		
C703	RENAULT	7700696986	16110	38149	123	CR 1841	9883	374541	
C703	VOLVO	3342102-5	16110	38149	123	CR 1841	9883	374541	
C703	VOLVO	3287778.9	16110	38149	123	CR 1841	9883	374541	
C704	RENAULT	7700722452	16210	37630.1	115	CR 1842	9858	374547	+ STAFFA
C705	RENAULT	7700721690	26211	37734.2	116	CR 1843	9857	374545	
C706	RENAULT	7700726440	16101	39508.5	112	CR 1838	9865	374546	
C706	VOLVO	3343740.1	16101	39508.5	112	CR 1838	9865	374546	
C707	RENAULT	7700735486	26101	120182	111	CR 1839	9854	374544	
C707	RENAULT	7700116049	26101	120182	111	CR 1839	9854	374544	KOYO PU255035CRR1HV2
C707	RENAULT	8200051091	26101	120182	111	CR 1839	9854	374544	
C707	VOLVO	3343741.9	26101	123132	111	CR 1839	9854	374544	
C708	RENAULT	7700735489	26102	39990	118	CR 1866	9881	374514	
C708	RENAULT	7700733489	26102	39990	118	CR 1866	9881	374514	
C708	RENAULT	7700116050	26102	39990	118	CR 1866	9881	374514	KOYO PU255035CRR1HV3
C708	RENAULT	8200051092	26102	39990	118	CR 1866	9881	374514	
C709	RENAULT	7700736419	16112	120180	119	CR 1867	9880		
C727	AUDI	078109243C	11200	123629	203	CR 1814	9940		
C728	AUDI-SEAT-SKODA-VW	078109244G	21201		505	CR 1643	9941		HK V120
C728	AUDI-SEAT-SKODA-VW	078109244G	21201		505	CR 1643	9205		HK V120
C729	AUDI	069109243B	21031	F-220096	174	CR 1681	9807		
C729	VOLVO	1257120	21031	F-220096	174	CR 1681	9807		
C730	AUDI-SEAT-VW	068109243F	11010	F-220095	172	CR 1682	9806		
C731	AUDI-SEAT-VW	026109243E	11000	F-220093	127	CR 1680	9805		
C732	FIAT	46416489				CR 1895			
C733	FIAT	46554826	22242	123697		CR 1894	9951		

TENDICINGHIA DISTRIBUZIONE
BELT TIGHTENERS
TENDEURS DE COURROIE
LISTA DI COMPARAZIONE - CROSS REFERENCES - LISTE CORRISPONDANCE

CORAM	APPLICAZIONE	RIF. ORIGINALE	SKF VKM	INA FRANCE	Q.H QTT	LORETT	IRB	SNT	NOTE
C733	FIAT	46400054	22242	123697		CR1894	9951		
C734	MERCEDES-BENZ	6012000770	38012	220092	191	CR 1456	9847	374605	
C735	MERCEDES-BENZ	6012000970	38001	219949	190	CR 1457	9846		
C736	MERCEDES-BENZ	6012001070		220124	193	CR 1477			
C737	FIAT	9400830379	23120	122124	101	CR 1827	9862		
C737	CITROËN-PEUGEOT	0830.14	23120	122124	101	CR 1827	9862		
C737	CITROËN-PEUGEOT	0830,37	23213	122124	101	CR1827	9862		
C737	ROVER	100080	23120	122124	101	CR 1827	9862		
C738	CITROËN	96052662	13201	120959.1	100	CR1848	9890		INTERCAMBIABILE CON C604
C738	CITROËN-PEUGEOT	0829.29	13201	120959.1	100	CR1848	9890		INTERCAMBIABILE CON C604
C738	FIAT	9605266280	13201	120959.1	100	CR1848	9890		INTERCAMBIABILE CON C604
C739	ALFA	60607962	22173	123653	544	CR 1828	9938		DAYCO 258
C739	ALFA	60607965	22173	123653	544	CR 1828	9938		HK V912
C739	ALFA	60652129	22173	123653	544	CR 1828	9938		INA 532 0120 10
C739	ALFA	60664403	22173	123653	544	CR 3265	9938		DAYCO 258
C739	ALFA	60671573	22173	123653	544	CR 1828	9938		HK V912
C739	ALFA	60812624	22173	123653	544	CR 1828	9938		INA 532 0120 10
C739	ALFA	60813415	22173	123653	544	CR 1828	9938		DAYCO 258
C739	FIAT-LANCIA	60607965	22173	123653	544	CR 1828	9938		HK V912
C739	FIAT-LANCIA	60652129	22173	123653	544	CR 3265	9938		INA 532 0120 10
C739	FIAT-LANCIA	60664403	22173	123653	544	CR 1828	9938		DAYCO 258
C739	FIAT-LANCIA	60671573	22173	123653	544	CR 1828	9938		HK V912
C739	FIAT-LANCIA	60812624	22173	123653	544	CR 3265	9938		INA 532 0120 10
C739	FIAT-LANCIA	60813415	22173	123653	544	CR 3265	9938		DAYCO 258
C739	IVECO	60607965	22173	123653	544	CR 1828	9938		HK V912
C739	IVECO	60652129	22173	123653	544	CR 3265	9938		INA 532 0120 10
C739	IVECO	60664403	22173	123653	544	CR 1828	9938		DAYCO 258
C739	IVECO	60671573	22173	123653	544	CR 1828	9938		HK V912
C739	IVECO	60812624	22173	123653	544	CR 1828	9938		INA 532 0120 10
C739	IVECO	60813415	22173	123653	544	CR 3265	9938		DAYCO 258
C740	FIAT-ALFA-LANCIA	7763644	22174-22179	123803	838	CR 1896			HK S939
C740	FIAT-ALFA-LANCIA	55187100	22174-22179	123803	838	CR 1896			HK S939
C740	FIAT-ALFA-LANCIA	60813590	22174-22179	123803	838	CR 1896			HK S939
C740	FIAT	71736493	22174	123803	838	CR 1896			HK S939
C740	OPEL-VAUXHALL	5636743	22174	123803	838	CR 1896			HK S939
C740	OPEL-VAUXHALL	93178807	22174	123803	838	CR 1896			HK S939
C741	FORD	1004549		230206		CR 1480P		374036/P	
C741	BMW	11281427252		230206		CR 1480P		374036/P	
C742	CITROËN-PEUGEOT	0829.62	13244	122985.3		CR 3000		374089	
C742	FIAT-LANCIA	9400829629	13244	122985.3		CR 3000		374089	
C743	CITROËN-PEUGEOT	0830.31	23244	122986.5		CR 3001			
C743	FIAT-LANCIA	9400830319	23244	122986.5		CR 3001			
C744	LADA	2112-1006120							
C745	LADA	2112-1006135-01							
C746	OPEL	636749	15121		198	CR1885	9948		
C746	OPEL - DAEWOO	90499401	15121		198	CR1885	9948		
C747	LADA	2108-1006120				CR3009			
C748	OPEL	5636426	25152	224971	299	CR1899	9953		FAG U453
C749	OPEL	5636427	25150	224967	300	CR1898	9952	374081	FAG U454
C750	OPEL	636725	15214	232481	551	CR1810	9102		FAG S450
C750	OPEL	5636732	15214	232481	551	CR1810	9102		FAG S450
C750	OPEL	5636733	15214	232481	551	CR1810	9102		FAG S450
C750	OPEL	636739	15214	232481	551	CR1810	9102		FAG S450
C750	OPEL	90412783	15214	232481	551	CR1810	9102		FAG S450
C750	OPEL	90530123	15214	232481	551	CR1810	9102		FAG S450
C750	OPEL	9128656	15214	232481	551	CR1810	9102		FAG S450

TENDICINGHIA DISTRIBUZIONE
BELT TIGHTENERS
TENDEURS DE COURROIE
LISTA DI COMPARAZIONE - CROSS REFERENCES - LISTE CORRISPONDANCE

CORAM	APPLICAZIONE	RIF. ORIGINALE	SKF VKM	INA FRANCE	Q.H QTT	LORETT	IRB	SNT	NOTE
C750	OPEL	9128516	15214	232481	551	CR1810	9102		FAG S450
C751	OPEL	4402639	26114	123777	876	CR3226			HK U290
C751	RENAULT	7700875307	26125	123777	876	CR3226			HK U290
C751	VOLVO	30865078	26114	123777	876	CR3226			HK U290
C752	GENERAL MOTORS	4506194	36031	F-124059		CR3234			HK U059
C752	GENERAL MOTORS	93160256	36031	F-124059		CR3234			HK U059
C752	OPEL	4410595	36031	F-124059		CR3234			HK U059
C752	OPEL	4506194	36031	F-124059		CR3234			HK U059
C752	OPEL	93160256	36031	F-124059		CR3234			HK U059
C752	OPEL-GENERAL MOTORS	9198527	36031	F-124059		CR3234			HK U059
C752	RENAULT	7700102931	36031	F-124059		CR3234			HK U059
C752	RENAULT	7700104092	36031	F-124059		CR3234			HK U059
C752	RENAULT	8200104754	36031	F-124059		CR3234			HK U059
C752	VAUXHALL	4410595	36031	F-124059		CR3234			HK U059
C752	VAUXHALL	93160256	36031	F-124059		CR3234			HK U059
C752	VOLVO	30883834	36031	F-124059		CR3234			HK U059
C753	FIAT	46454419	32006			CR1455			HK U944
C753	FIAT	46514222	32006			CR1455			HK U944
C753	FIAT	64654419	32006			CR1455			HK U944
C754	ALFA	60814110		123747		CR1452 P		374020/P	PULEGGIA/PULLEY
C754	ALFA	7795069		123747		CR1452 P		374020/P	PULEGGIA/PULLEY
C754	FIAT	46406204		123747		CR1452 P		374020/P	PULEGGIA/PULLEY
C754	FIAT	46442999		123747		CR1452 P		374020/P	PULEGGIA/PULLEY
C754	FIAT	46524692		123747		CR1452 P		374020/P	PULEGGIA/PULLEY
C754	FIAT	46546374		123747		CR1452 P		374020/P	PULEGGIA/PULLEY
C754	FIAT	7798333		123747		CR1452 P		374020/P	PULEGGIA/PULLEY
C755	WOLGA	406.1308080-21							
C755	WOLGA	6-256801EW24							
C756	FORD	7109163				CR1481			
C757	AUDI	030145299C		230206		CR1480			
C757	OPEL	1340533		230206		CR1480			
C757	OPEL	1340541		230206		CR1480			
C757	OPEL	1340554		230206		CR1480			
C757	SEAT	030145299C		230206		CR1480			
C757	SKODA	030145299C		230206		CR1480			
C758	OPEL	1340535	35002	224134	917	CR1487			U458
C758	OPEL	90409238	35002	224134	917	CR1487			U458
C759	FORD	7053546		493641	777	CR1490			S777
C759	FORD	915F19A216AB		433641	777	CR1490			S777
C760	OPEL	90571758				CR1478			
C761	OPEL	90530547				CR1479			
C762	FORD	6789631				CR1482			
C763	FIAT	46440604	337155		710	CR1451			U943
C763	FIAT	7789752	32005		710	CR1451			U943
C765	FIAT	46756937	32031	239686		CR3543			HK U866
C766	DAEWOO	96103222	80000	2277281	526	CR3005	IR 9971		HK U271
C766	DAEWOO	96350526	80000	2277281	526	CR3005	IR 9971		SNR GE 35315
C767	ALFA ROMEO	60813592	12174		841	CR1819	IR 9115		S941
C767	FIAT/LANCIA	7778565	12174		841	CR1819	IR 9115		S941
C767	OPEL/VAUXHALL	93181966	12174		841	CR1819	IR 9115		DAYCO 108
C767	OPEL/VAUXHALL	5636456	12174		841	CR1819	IR 9115		DAYCO 108
C768	CITROËN-PEUGEOT	96088591	33003	12113385	698	CR1462	9124		HK S935
C768	CITROËN-PEUGEOT	575118	33003	12113385	698	CR1462	9124		HK S935
C768	FIAT-LANCIA	9608859180	33003	12113385	698	CR1462	9124		HK S935
C769	CITROËN-PEUGEOT	575115	33002	123000	236	CR1473	9931		HK S521
C769	CITROËN-PEUGEOT	575138	33002	123000	236	CR1473	9931		QH QTA 703

TENDICINGHIA DISTRIBUZIONE
BELT TIGHTENERS
TENDEURS DE COURROIE
LISTA DI COMPARAZIONE - CROSS REFERENCES - LISTE CORRISPONDANCE

CORAM	APPLICAZIONE	RIF. ORIGINALE	SKF VKM	INA FRANCE	Q.H QTT	LORETT	IRB	SNT	NOTE
C769	CITROËN-PEUGEOT	96278607	33002	123000	236	CR1473	9931		HK S521
C769	CITROËN-PEUGEOT	96074514	33002	123000	236	CR1473	9931		HK S521
C769	FIAT-LANCIA	9607451480	33002	123000	236	CR1473	9931		QH QTA 703
C769	FIAT-LANCIA	9627860780	33002	123000	236	CR1473	9931		HK S521
C770	FORD	1005823	24100	21003817	153	CR1817	9902		HK U786
C770	FORD	1103598	24100	21003817	153	CR1817	9902		HK U786
C770	FORD	6177884	24100	21003817	153	CR1817	9902		HK U786
C770	FORD	6492482	24100	21003817	153	CR1817	9902		HK U786
C770	FORD	7053802	24100	21003817	153	CR1817	9902		HK U786
C770	FORD	89FF-6K254-DC	24100	21003817	153	CR1817	9902		HK U786
C770	FORD	89FF-6K254-DD	24100	21003817	153	CR1817	9902		HK U786
C770	FORD	96FF-6K254-DA	24100	21003817	153	CR1817	9902		HK U786
C770	FORD	96FF-6K254-DB	24100	21003817	153	CR1817	9902		HK U786
C770	MAZDA	1E07-12-730	24100	21003817	153	CR1817	9902		HK U786
C770	MAZDA	1E07-23-951	24100	21003817	153	CR1817	9902		HK U786
C770	MAZDA	1E07-23-951A	24100	21003817	153	CR1817	9902		HK U786
C770	MAZDA	1E07-23-951B	24100	21003817	153	CR1817	9902		HK U786
C770	MAZDA	1E07-23-951C	24100	21003817	153	CR1817	9902		HK U786
C770	MAZDA	1E12-23-951	24100	21003817	153	CR1817	9902		HK U786
C771	FORD	1005822	14103	123642	285	CR1464	9915		HK S792
C771	FORD	6177882	14103	123642	285	CR1464	9915		HK S792
C771	FORD	677882	14103	123642	285	CR1464	9915		HK S792
C771	FORD	6988203	14103	123642	285	CR1464	9915		HK S792
C771	FORD	93FF-6K254-BA	14103	123642	285	CR1464	9915		HK S792
C771	FORD	96FF-6K254-BA	14103	123642	285	CR1464	9915		HK S792
C771	MAZDA	1E07-12-720	14103	123642	285	CR1464	9915		HK S792
C772	FORD	1005516	14105	49288.6	257	CR1833	9985		HK S796
C772	FORD	99FF-6K254-AA	14105	49288.6	257	CR1833	9985		HK S796
C772	MAZDA	1E07-12-700	14105	49288.6	257	CR1833	9985		HK S796
C773	SKODA/ VW / AUDI	038145276	31002		QTA 1109	CR1485	9174		HK U717
C773	SEAT	038145276	31002		QTA 1109	CR1485	9174		HK U717
C774	SEAT/AUDI/VW	028145278 A	31004	214797	QTA 494	CR1491			HK S972 / S097
C774	SEAT/AUDI/VW	028145278 E	31004	214797	QTA 494	CR1491			HK S972 / S097
C774	FORD	1051901	31004	214797	QTA 494	CR1491			HK S972 / S097
C774	FORD	VX028145278EVX	31004	214797	QTA 494	CR1491			HK S972 / S097
C775	GENERAL MOTORS-OPEL	5636738	15202	232488	291	CR1800	IR 9100		HK S447
C775	GENERAL MOTORS-OPEL	636726	15202	232488	291	CR1800	IR 9100		HK S447
C775	GENERAL MOTORS-OPEL	636737	15202	232488	291	CR1800	IR 9100		HK S447
C775	GENERAL MOTORS-OPEL	90411774	15202	232488	291	CR1800	IR 9100		HK S447
C775	GENERAL MOTORS-OPEL	90530125	15202	232488	291	CR1800	IR 9100		HK S447
C775	GENERAL MOTORS-OPEL	9158004	15202	232488	291	CR1800	IR 9100		HK S447
C775	VAUXHALL	5636738	15202	232488	291	CR1800	IR 9100		HK S447
C775	VAUXHALL	636726	15202	232488	291	CR1800	IR 9100		HK S447
C775	VAUXHALL	636737	15202	232488	291	CR1800	IR 9100		HK S447
C775	VAUXHALL	90411774	15202	232488	291	CR1800	IR 9100		HK S447
C775	VAUXHALL	90530125	15202	232488	291	CR1800	IR 9100		HK S447
C775	VAUXHALL	9158004	15202	232488	291	CR1800	IR 9100		HK S447
C776	DAEWOO	90530126	25212	224964	298	CR1801	IR9906		HK U446
C776	DAEWOO	90411782	25212	224964	298	CR1801	IR9906		HK U446
C776	GENERAL MOTORS-OPEL	5636425	25212	224964	298	CR1801	IR9906		HK U446
C776	GENERAL MOTORS-OPEL	636415	25212	224964	298	CR1801	IR9906		HK U446
C776	GENERAL MOTORS-OPEL	90411782	25212	224964	298	CR1801	IR9906		HK U446
C776	GENERAL MOTORS-OPEL	9128736	25212	224964	298	CR1801	IR9906		HK U446
C776	GENERAL MOTORS-OPEL	9128738	25212	224964	298	CR1801	IR9906		HK U446
C776	VAUXHALL	5636425	25212	224964	298	CR1801	IR9906		HK U446
C776	VAUXHALL	636415	25212	224964	298	CR1801	IR9906		HK U446

TENDICINGHIA DISTRIBUZIONE
BELT TIGHTENERS
TENDEURS DE COURROIE
LISTA DI COMPARAZIONE - CROSS REFERENCES - LISTE CORRISPONDANCE

CORAM	APPLICAZIONE	RIF. ORIGINALE	SKF VKM	INA FRANCE	Q.H QTT	LORETT	IRB	SNT	NOTE
C776	VAUXHALL	90411782	25212	224964	298	CR1801	IR9906		HK U446
C776	VAUXHALL	9128738	25212	224964	298	CR1801	IR9906		HK U446
C777	GENERAL MOTORS-OPEL	636416	25213	224966	297	CR1803	IR9907		HK U452
C777	GENERAL MOTORS-OPEL	90411773	25213	224966	297	CR1803	IR9907		TKR 9907
C777	VAUXHALL	636416	25213	224966	297	CR1803	IR9907		TKR 9907
C777	VAUXHALL	90411773	25213	224966	297	CR1803	IR9907		TKR 9907
C778	ALFA ROMEO	60812622	12173		279	CR1821	IR9114		HK S932
C778	FIAT-LANCIA	60596372	12173		279	CR1821	IR9114		SNR GT 358.31
C778	FIAT-LANCIA	60812622	12173		279	CR1821	IR9114		DAYCO 301
C779	CITROËN-PEUGEOT	081820	13300	121792	255	CR1855	IR9944		HK S408
C779	CITROËN-PEUGEOT	96098279	13300	121792	255	CR1855	IR9944		HK S408
C780	CITROËN-PEUGEOT	083012	23300	121793	256	CR1856	IR9945		HK U411
C780	CITROËN-PEUGEOT	96094102	23300	121793	256	CR1856	IR9945		SNR GE 35914
C781	CITROËN-PEUGEOT	82932	13202	122868	427	CR1893	IR9943		HK S933
C781	CITROËN-PEUGEOT	82935	13202	122868	427	CR1893	IR9943		SNR GT 35912
C781	CITROËN-PEUGEOT	96225744	13202	122868	427	CR1893	IR9943		
C781	FIAT/LANCIA	1473010080	13202	122868	427	CR1893	IR9943		
C781	FIAT/LANCIA	9617541380	13202	122868	427	CR1893	IR9943		
C781	FIAT/LANCIA	9622574480	13202	122868	427	CR1893	IR9943		
C782	FIAT/LANCIA	7782192	12215		280	CR1831	IR9113		SNR GT35829 - HK S928
C783	FORD	1100585	21142	234845	941	CR3155	IR9211		SNR GE35726 - HK U046
C783	FORD	XM21-6K297-AA	21142	234845	941	CR3155	IR9211		SNR GE35726 - HK U046
C783	SEAT-SKODA-VW/AUDI	045109244A	21142	234845	941	CR3155	IR9211		SNR GE35726 - HK U046
C784	FORD	1221491	21147	239652		CR3495			HK U855
C784	FORD	2M216K297AA	21147	239652		CR3495			HK U855
C784	SEAT-VW-AUDI	038109244J	21147	239652		CR3495			HK U855
C785	CITROËN-PEUGEOT	575120	35007	2246692	QTA 750	CR1461	IR9231		HK S406Z - SNR GA35967
C785	CITROËN-PEUGEOT	96089899	35007	2246692	QTA 750	CR1461	IR9231		HK S406Z - SNR GA35967
C785	FIAT-LANCIA	9608989980	35007	2246692	QTA 750	CR1461	IR9231		HK S406Z - SNR GA35967
C786	SEAT-SKODA-VW/AUDI	058109244	21004	227442	498	CR3003	IR9131		HK U078
C787	FORD	1005120	21012	222651	493	CR3004	IR9128	374086	HK U098
C787	FORD	7400530	21012	222651	493	CR3004	IR9128	374086	HK U098
C787	FORD	VX028-109244-VX	21012	222651	493	CR3004	IR9128	374086	HK U098
C787	SEAT-SKODA-VW/AUDI	028109244	21012	222651	493	CR3004	IR9128	374086	HK U098
C788	SEAT	038109244 B	21130	227243	939	CR3002	IR9166	374084	HK U093
C788	SEAT	038109244 H	21130	227243	939	CR3002	IR9166	374084	HK U093
C788	SEAT	038109244 M	21130	227243	939	CR3002	IR9166	374084	HK U093
C788	SKODA	038109244 B	21130	227243	939	CR3002	IR9166	374084	HK U093
C788	SKODA	038109244 H	21130	227243	939	CR3002	IR9166	374084	HK U093
C788	SKODA	038109244 M	21130	227243	939	CR3002	IR9166	374084	HK U093
C788	VW / AUDI	038109244 B	21130	227243	939	CR3002	IR9166	374084	HK U093
C788	VW / AUDI	038109244 H	21130	227243	939	CR3002	IR9166	374084	HK U093
C788	VW / AUDI	038109244 M	21130	227243	939	CR3002	IR9166	374084	HK U093
C789	SEAT	038109244 E	21131	231223	942	CR3147	IR9167		HK U144
C789	SKODA	038109244 E	21131	231223	942	CR3147	IR9167		HK U144
C789	VW / AUDI	038109244 E	21131	231223	942	CR3147	IR9167		HK U144
C790	MERCEDES-BENZ	6019810027				CR3064			HK U684
C791	FORD	6131141	14201	210045	151	CR1873	IR9837		HK S784
C791	FORD	6145028	14201	210045	151	CR1873	IR9837		HK S784
C791	FORD	6182891	14201	210045	151	CR1873	IR9837		HK S784
C791	FORD	845M-000-6K254-BA	14201	210045	151	CR1873	IR9837		HK S784
C791	FORD	84SM-6K254-CA	14201	210045	151	CR1873	IR9837		HK S784
C791	FORD	X815H-6K254-NA	14201	210045	151	CR1873	IR9837		HK S784
C792	FIAT	46736886		F-11080.62					
C793	CITROËN-PEUGEOT	0829.90	13253	531057210		CR3560			
C793	CITROËN-PEUGEOT	9642929880	13253	531057210		CR3560			

TENDICINGHIA DISTRIBUZIONE
BELT TIGHTENERS
TENDEURS DE COURROIE
LISTA DI COMPARAZIONE - CROSS REFERENCES - LISTE CORRISPONDANCE

CORAM	APPLICAZIONE	RIF. ORIGINALE	SKF VKM	INA FRANCE	Q.H QTT	LORETT	IRB	SNT	NOTE
C794	CITROËN-PEUGEOT	5751.29	33013	531014810	624	CR1493	IR9219		HK S410
C794	CITROËN-PEUGEOT	5751.29	33013	F-122662.6	624	CR1493	IR9219		HK S410
C794	CITROËN-PEUGEOT	95577787	33013	531014810	624	CR1493	IR9219		HK S410
C794	CITROËN-PEUGEOT	95577787	33013	F-122662.6	624	CR1493	IR9219		HK S410
C794	CITROËN-PEUGEOT	96188885	33013	531014810	624	CR1493	IR9219		HK S410
C794	CITROËN-PEUGEOT	96188885	33013	F-122662.6	624	CR1493	IR9219		HK S410
C794	CITROËN-PEUGEOT	9618888580	33013	531014810	624	CR1493	IR9219		HK S410
C794	CITROËN-PEUGEOT	9618888580	33013	F-122662.6	624	CR1493	IR9219		HK S410
C794	FIAT-LANCIA	9618888580	33013	531014810	624	CR1493	IR9219		HK S410
C794	FIAT-LANCIA	9618888580	33013	F-122662.6	624	CR1493	IR9219		HK S410
C795	AUDI-SEAT-SKODA-VW	058260511	31059	531030910	QTA 1060	CR3154			
C796	CITROËN-PEUGEOT	6453.S4	33012	F-122649	623	CR3289	TKR 9125		HK S531
C796	CITROËN-PEUGEOT	6453.S5	33012	F-122649	623	CR3289	TKR 9125		HK S531
C796	CITROËN-PEUGEOT	96222692	33012	F-122649	623	CR3289	TKR 9125		HK S531
C796	CITROËN-PEUGEOT	96287841	33012	F-122649	623	CR3289	TKR 9125		HK S531
C797	AUDI/VW	074109243	21032	F-220125	128	CR1812	IR9923		HK S105
C797	AUDI/VW	074109243 K	21032	F-220125	128	CR1812	IR9923		HK S105
C798	AUDI/SEAT/SKODA/VW	078109243 K	11201		680	CR1642	IR9160		HK S118
C799	AUDI/VW	078109244	21052		504	CR3129	IR9941		HK U119
C799	AUDI/VW	078109244	21052		936	CR3129	IR9941		HK U119
C799	AUDI/VW	078109244 C	21052		504	CR3129	IR9941		HK U119
C799	AUDI/VW	078109244 C	21052		936	CR3129	IR9941		HK U119
C799	AUDI/VW	078109244 F	21052		504	CR3129	IR9941		HK U119
C799	AUDI/VW	078109244 F	21052		936	CR3129	IR9941		HK U119
C800	AUDI/VW	078903341 J	31010	F-220292	501	CR3124			HK U110
C800	AUDI/VW	078903341 J	31010	F-220292	QTA 501	CR3124			HK U110
C801	AUDI/SEAT/SKODA/VW	078109243 Q	11202		QTT968	CR3175			HK S088
C801	AUDI/SEAT/SKODA/VW	078109243 R	11202		QTT968	CR3175			HK S088
C802	SKODA/ VW / AUDI	078109244 H	21202	F-231231	QTT937	CR3144	TKR 9206		HK U089
C802	SKODA/ VW / AUDI	078109244 J	21202	F-231231	QTT937	CR3144	TKR 9206		HK U089
C803	AUDI/SEAT/VW	028109243 E	11014	F-232486	QTT847	CR1876	IR 9104		SNR GT357.10 - HK S096
C803	AUDI/SEAT/VW/SKODA	028109243 F	11014	F-232486	QTT847	CR1876	IR 9104		SNR GT357.10 - HK S096
C803	FORD	1058458	11014	F-232486	QTT847	CR1876	IR 9104		SNR GT357.10 - HK S096
C803	FORD	1669904	11014	F-232486	QTT847	CR1876	IR 9104		SNR GT357.10 - HK S096
C803	FORD	95VW6K254CA	11014	F-232486	QTT847	CR1876	IR 9104		SNR GT357.10 - HK S096
C803	FORD	95VW6K254DA	11014	F-232486	QTT847	CR1876	IR 9104		SNR GT357.10 - HK S096
C804	SEAT/AUDI/VW	027109243	11020	F-220083	QTT173	CR1863	IR 9808		HK S102
C804	SEAT/AUDI/VW	051109243	11020	F-220083	QTT173	CR1863	IR 9808		HK S102
C805	VW/AUDI	048109243 A	11001	F-123623	QTT178	CR1813	IR 9922		HK S101
C806	VW/AUDI/SEAT/SKODA	037145276	31007	231224	QTA495	CR3130			HK U112 - SNR GA354.06
C806	VW/AUDI/SEAT/SKODA	037145276 A	31007	231224	QTA495	CR3130			HK U112 - SNR GA354.06
C806	VW/AUDI/SEAT/SKODA	074145278 E	31007	231224	QTA495	CR3130			HK U112 - SNR GA354.06
C806	VW/AUDI/SEAT/SKODA	074145278 B	31007	231224	QTA495	CR3130			HK U112 - SNR GA354.06
C807	VW/AUDI	028145278 J		F-801206	QTA1016	CR3152			HK S031
C808	DAEWOO	12810A81400-000	76102		525	CR3007	9973		HK S273
C808	DAEWOO	12810-81400-000	76102		525	CR3007	9973		HK S273
C808	DAEWOO	94580139	76102		525	CR3007	9973		HK S273
C808	DAEWOO/SUZUKI	12810-81401-000	76102		525	CR3007	9973		HK S273
C808	SUZUKI	12810-81400	76102		525	CR3007	9973		HK S273
C808	SUZUKI	12810-81401	76102		525	CR3007	9973		HK S273
C808	SUZUKI	12810-81402	76102		525	CR3007	9973		HK S273
C809	OPEL/GENERAL MOTORS	636422	25201	F-220086	166	CR1837	IR 9875		HK U442
C809	OPEL/GENERAL MOTORS	90264022	25201	F-220086	166	CR1837	IR 9875		HK U442
C809	VAUXHALL	636422	25201	F-220086	166	CR1837	IR 9875		HK U442
C809	VAUXHALL	90264022	25201	F-220086	166	CR1837	IR 9875		HK U442
C810	OPEL/GENERAL MOTORS	636421	25200	F-220135	165	CR1696	IR 9848		HK S441

TENDICINGHIA DISTRIBUZIONE
BELT TIGHTENERS
TENDEURS DE COURROIE
LISTA DI COMPARAZIONE - CROSS REFERENCES - LISTE CORRISPONDANCE

CORAM	APPLICAZIONE	RIF. ORIGINALE	SKF VKM	INA FRANCE	Q.H QTT	LORETT	IRB	SNT	NOTE
C810	OPEL/GENERAL MOTORS	90180131	25200	F-220135	165	CR1696	IR 9848		HK S441
C810	VAUXHALL	636421	25200	F-220135	165	CR1696	IR 9848		HK S441
C810	VAUXHALL	90180131	25200	F-220135	165	CR1696	IR 9848		HK S441
C811	HUNDAY	24410-23011	75629		1019	CR5119	TKR 9287		HK S722
C811	HUNDAY	24410-23400	75629		1019	CR5119	TKR 9287		HK S722
C811	HUNDAY	24410-23500	75629		1019	CR5119	TKR 9287		HK S722
C812	PORSCHE	94410502704	12700	202858	169		IR 9859		HK S136
C812	SEAT	021012060 A	12700	202858	169		IR 9859		HK S136
C812	SEAT	SE 021012060 A	12700	202858	169		IR 9859		HK S136
C812	SEAT	XO 39619190	12700	202858	169		IR 9859		HK S136
C813	BMW	11311708806	28001	F-220085	132	CR1467	IR 9867		HK U493
C813	BMW	11311709646	28001	F-220085	132	CR1467	IR 9867		HK U493
C815	FORD	6121753	14301	48559.7	157	CR1830	9842		HK S782
C815	FORD	6121754	14301	48559.7	157	CR1830	9842		HK S782
C815	FORD	844F-6K254-A1A	14301	48559.7	157	CR1830	9842		HK S782
C815	FORD	844F-6K254-AA	14301	48559.7	157	CR1830	9842		HK S782
C815	FORD	844F-GK254-A2A	14301	48559.7	157	CR1830	9842		HK S782
C816	RENAULT	7700273277	16001	F-123154.3	950	CR3206	IR 9145		HK S334
C816	RENAULT	8200102612	16001	F-123154.3	950	CR3206	IR 9145		HK S334

TENDICINGHIA DISTRIBUZIONE
BELT TIGHTENERS
TENDEURS DE COURROIE
LISTA DI COMPARAZIONE - CROSS REFERENCES - LISTE CORRISPONDANCE

ALFA ROMEO	CORAM
7763644	C740
7795069	C754
55187100	C740
60504224	C500
60504225	C501
60504226	C504
60586519	C503
60586520	C502
60607962	C739
60607965	C739
60652129	C739
60664403	C739
60671573	C739
60800148	C523
60805460	C539
60805833	C522
60811487	C529
60811488	C528
60812622	C778
60812624	C739
60812645	C539/F
60812645	C539
60813415	C739
60813590	C740
60813592	C767
60814110	C754

AUDI	CORAM
27109243	C804
28109244	C787
37145276	C806
38145276	C773
51109243	C804
58109244	C786
58260511	C795
74109243	C797
78109244	C799
78109244	C799
026109243E	C731
028109243 E	C803
028109243 F	C803
028145278 A	C774
028145278 E	C774
028145278 J	C807
030145299C	C757
037145276 A	C806
038109244 B	C788
038109244 E	C789
038109244 H	C788
038109244 M	C788
038109244J	C784
045109244A	C783
048109243 A	C805
068109243F	C730
069109243B	C729
074109243 K	C797
074145278 B	C806
074145278 E	C806
078109243 K	C798
078109243 Q	C801
078109243 R	C801
078109243C	C727
078109244 C	C799
078109244 C	C799
078109244 F	C799
078109244 F	C799
078109244 H	C802
078109244 J	C802
078109244G	C728
078109244G	C728
078903341 J	C800
078903341 J	C800

BMW	CORAM
11281427252	C741
11311708806	C813
11311709646	C813

CITROËN	CORAM
818.17	C535
829.1	C602
829.11	C600
829.12	C603
829.19	C604
829.29	C738
829.33	C545
829.54	C604
829.62	C742
829.9	C793
830.02	C601
830.13	C546
830.14	C737
830.31	C743
830.37	C737
5751.29	C794
81820	C779
82932	C781
82935	C781
83012	C780
575115	C769
575118	C768
575120	C785
575138	C769
91508298	C603
95577787	C794
95577787	C794
95619217	C525
96052662	C738
96074514	C769
96088591	C768
96089899	C785
96094102	C780
96098279	C779
96188885	C794
96188885	C794
96222692	C796
96225744	C781
96278607	C769
96287841	C796
97535002	C604
9618888580	C794
9618888580	C794
9642929880	C793
6453.S4	C796
6453.S5	C796

DAEWOO	CORAM
90411782	C776
90499401	C746
90530126	C776
94580139	C808
96103222	C766
96350526	C766
12810-81400-000	C808
12810-81401-000	C808
12810A81400-000	C808

FIAT	CORAM
4178014	C510
4178016	C511
4277048	C508
4320893	C509
4385583	C516
4386575	C517
4427068	C505
4438894	C506
4443446	C514
4443703	C515
4740846	C512
4740847	C513
5495830	C535
5952181	C507
5956109	C523
5966001	C519
5972277	C525
5992517	C521
5997325	C522
7301661	C537
7301662	C536
7540301	C518
7541718	C532
7553564	C526
7553565	C527
7554724	C538
7596727	C534
7596728	C533
7596876	C529
7596877	C528
7702173	C539
7733200	C544
7749452	C543
7763644	C740
7778565	C767
7782192	C782
7784613	C543
7789752	C763
7797142	C539
7798333	C754
46400054	C733
46406204	C754
46416489	C732
46424716	C539
46439454	C543
46439471	C544
46440604	C763
46442999	C754
46454419	C753
46514222	C753
46524692	C754
46546374	C754

TENDICINGHIA DISTRIBUZIONE
BELT TIGHTENERS
TENDEURS DE COURROIE
LISTA DI COMPARAZIONE - CROSS REFERENCES - LISTE CORRISPONDANCE

46554826	**C733**
46736886	**C792**
46756937	**C765**
55187100	**C740**
60596372	**C778**
60607965	**C739**
60652129	**C739**
60664403	**C739**
60671573	**C739**
60812622	**C778**
60812624	**C739**
60813415	**C739**
60813590	**C740**
64654419	**C753**
71736493	**C740**
1473010080	**C781**
9400829629	**C742**
9400830319	**C743**
9400830379	**C737**
9605266280	**C738**
9607451480	**C769**
9608859180	**C768**
9608989980	**C785**
9615923380	**C546**
9617188680	**C545**
9617541380	**C781**
9618888580	**C794**
9618888580	**C794**
9622574480	**C781**
9627860780	**C769**

FORD	**CORAM**
677882	**C771**
1004549	**C741**
1005120	**C787**
1005516	**C772**
1005822	**C771**
1005823	**C770**
1051901	**C774**
1058458	**C803**
1100585	**C783**
1103598	**C770**
1221491	**C784**
1496915	**C631**
1500004	**C630**
1669904	**C803**
6121753	**C815**
6121754	**C815**
6131141	**C791**
6145028	**C791**
6177882	**C771**
6177884	**C770**
6182891	**C791**
6492482	**C770**
6789631	**C762**
6988203	**C771**
7053546	**C759**
7053802	**C770**
7109163	**C756**
7400530	**C787**
2M216K297AA	**C784**
844F-6K254-A1A	**C815**
844F-6K254-AA	**C815**
844F-GK254-A2A	**C815**
845M-000-6K254-BA	**C791**
84SM-6K254-CA	**C791**
89FF-6K254-DC	**C770**
89FF-6K254-DD	**C770**
915F19A216AB	**C759**
93FF-6K254-BA	**C771**
95VW6K254CA	**C803**
95VW6K254DA	**C803**
96FF-6K254-BA	**C771**
96FF-6K254-DA	**C770**
96FF-6K254-DB	**C770**
99FF-6K254-AA	**C772**
VX028-109244-VX	**C787**
VX028145278EVX	**C774**
X815H-6K254-NA	**C791**
XM21-6K297-AA	**C783**

GENERAL MOTORS	**CORAM**
636415	**C776**
636416	**C777**
636421	**C810**
636422	**C809**
636726	**C775**
636737	**C775**
4506194	**C752**
5636425	**C776**
5636738	**C775**
9128736	**C776**
9128738	**C776**
9158004	**C775**
9198527	**C752**
90180131	**C810**
90264022	**C809**
90411773	**C777**
90411774	**C775**
90411782	**C776**
90530125	**C775**
93160256	**C752**

HUNDAY	**CORAM**
24410-23011	**C811**
24410-23400	**C811**
24410-23500	**C811**

IVECO	**CORAM**
4740846	**C512**
4740847	**C513**
7301661	**C537**
7301662	**C536**
60607965	**C739**
60652129	**C739**
60664403	**C739**
60671573	**C739**
60812624	**C739**
60813415	**C739**

LADA	
21051006118	**C650**
21051006124	**C650**
2108-1006120	**C747**
2112-1006120	**C744**
2112-1006135-01	**C745**
212151006120	**C600**
212151006138	**C601**

LANCIA	**CORAM**
4385583	**C516**
4386575	**C517**
4427068	**C505**
5956109	**C523**
5997325	**C522**
7302681	**C524**
7541718	**C532**
7596727	**C534**
7596728	**C533**
7702173	**C539**
7763644	**C740**
7778565	**C767**
7782192	**C782**
46424716	**C539**
55187100	**C740**
60596372	**C778**
60607965	**C739**
60652129	**C739**
60664403	**C739**
60671573	**C739**
60812622	**C778**
60812624	**C739**
60813415	**C739**
60813590	**C740**
1473010080	**C781**
9400829629	**C742**
9400830319	**C743**
9607451480	**C769**
9608859180	**C768**
9608989980	**C785**
9617541380	**C781**
9618888580	**C794**
9618888580	**C794**
9622574480	**C781**
9627860780	**C769**

MAZDA	**CORAM**
1E07-12-700	**C772**
1E07-12-720	**C771**
1E07-12-730	**C770**
1E07-23-951	**C770**
1E07-23-951A	**C770**
1E07-23-951B	**C770**
1E07-23-951C	**C770**
1E12-23-951	**C770**

MERCEDES-BENZ	**CORAM**
6012000770	**C734**
6012000970	**C735**
6012001070	**C736**
6019810027	**C790**

TENDICINGHIA DISTRIBUZIONE
BELT TIGHTENERS
TENDEURS DE COURROIE
LISTA DI COMPARAZIONE - CROSS REFERENCES - LISTE CORRISPONDANCE

OPEL	CORAM
636415	C776
636416	C777
636421	C810
636422	C809
636725	C750
636726	C775
636737	C775
636739	C750
636749	C746
1340533	C757
1340535	C758
1340541	C757
1340554	C757
4402639	C751
4410595	C752
4506194	C752
5636425	C776
5636426	C748
5636427	C749
5636456	C767
5636732	C750
5636733	C750
5636738	C775
5636743	C740
9128516	C750
9128656	C750
9128736	C776
9128738	C776
9158004	C775
9198527	C752
90180131	C810
90264022	C809
90409238	C758
90411773	C777
90411774	C775
90411782	C776
90412783	C750
90499401	C746
90530123	C750
90530125	C775
90530547	C761
90571758	C760
93160256	C752
93178807	C740
93181966	C767

PEUGEOT	CORAM
818.17	C535
829.1	C602
829.11	C600
829.11	C600
829.12	C603
829.17	C525
829.19	C604
829.29	C738
829.33	C545
829.54	C604
829.62	C742
829.9	C793
830.02	C601
830.13	C546
830.14	C737
830.31	C743
830.37	C737
5751.29	C794
5751.29	C794
81820	C779
82932	C781
82935	C781
83012	C780
575115	C769
575118	C768
575120	C785
575138	C769
95577787	C794
95577787	C794
96074514	C769
96088591	C768
96089899	C785
96094102	C780
96098279	C779
96188885	C794
96188885	C794
96222692	C796
96225744	C781
96278607	C769
96287841	C796
9618888580	C794
9618888580	C794
9642929880	C793
6453.S4	C796
6453.S5	C796

PORSCHE	CORAM
94410502704	C812

RENAULT	CORAM
5001001259	C512
5001001272	C513
7700102931	C752
7700104092	C752
7700116049	C707
7700116050	C708
7700273277	C816
7700627156	C602
7700692315	C602
7700696986	C703
7700696987	C700
7700720366	C701
7700721690	C705
7700722452	C704
7700726440	C706
7700733489	C708
7700735486	C707
7700735489	C708
7700736085	C702
7700736419	C709
7700875307	C751
8200051091	C707
8200051092	C708
8200102612	C816
8200104754	C752

ROVER	CORAM
100080	C737
LHP-100009	C601
LHP-100070	C546
LHP-10010	C600
LHP-100590	C545

SEAT	CORAM
38145276	C773
27109243	C804
28109244	C787
37145276	C806
51109243	C804
58109244	C786
58260511	C795
021012060 A	C812
026109243E	C731
028109243 E	C803
028109243 F	C803
028145278 A	C774
028145278 E	C774
030145299C	C757
037145276 A	C806
038109244 B	C788
038109244 E	C789
038109244 H	C788
038109244 M	C788
038109244J	C784
045109244A	C783
068109243F	C730
074145278 B	C806
074145278 E	C806
078109243 K	C798
078109243 Q	C801
078109243 R	C801
078109244G	C728
078109244G	C728
SE 021012060 A	C812
XO 39619190	C812
XO43552140	C518

SKODA	CORAM
28109244	C787
37145276	C806
38145276	C773
58109244	C786
58260511	C795
028109243 F	C803
030145299C	C757
037145276 A	C806
038109244 B	C788
038109244 E	C789
038109244 H	C788
038109244 M	C788
045109244A	C783
074145278 B	C806
074145278 E	C806
078109243 K	C798
078109243 Q	C801
078109243 R	C801
078109244 H	C802
078109244 J	C802

TENDICINGHIA DISTRIBUZIONE
BELT TIGHTENERS
TENDEURS DE COURROIE
LISTA DI COMPARAZIONE - CROSS REFERENCES - LISTE CORRISPONDANCE

078109244G	**C728**
078109244G	**C728**

SUZUKI	**CORAM**
12810-81400	**C808**
12810-81401	**C808**
12810-81401-000	**C808**
12810-81402	**C808**

VAUXHALL	**CORAM**
636415	**C776**
636416	**C777**
636421	**C810**
636422	**C809**
636726	**C775**
636737	**C775**
4410595	**C752**
5636425	**C776**
5636456	**C767**
5636738	**C775**
5636743	**C740**
9128738	**C776**
9158004	**C775**
90180131	**C810**
90264022	**C809**
90411773	**C777**
90411774	**C775**
90411782	**C776**
90530125	**C775**
93160256	**C752**
93178807	**C740**
93181966	**C767**

VOLVO	**CORAM**
1257120	**C729**
3287776.3	**C701**
3287778.9	**C703**
3343740.1	**C706**
3343741.9	**C707**
30865078	**C751**
30883834	**C752**
3342102-5	**C703**
3342143-9	**C700**

VOLKSWAGEN	**CORAM**
27109243	**C804**
28109244	**C787**
37145276	**C806**
38145276	**C773**
51109243	**C804**
58109244	**C786**
58260511	**C795**
74109243	**C797**
78109244	**C799**
78109244	**C799**
026109243E	**C731**
028109243 E	**C803**
028109243 F	**C803**
028145278 A	**C774**
028145278 E	**C774**
028145278 J	**C807**
037145276 A	**C806**
038109244 B	**C788**
038109244 E	**C789**
038109244 H	**C788**
038109244 M	**C788**
038109244J	**C784**
045109244A	**C783**
048109243 A	**C805**
068109243F	**C730**
074109243 K	**C797**
074145278 B	**C806**
074145278 E	**C806**
078109243 K	**C798**
078109243 Q	**C801**
078109243 R	**C801**
078109244 C	**C799**
078109244 C	**C799**
078109244 F	**C799**
078109244 F	**C799**
078109244 H	**C802**
078109244 J	**C802**
078109244G	**C728**
078109244G	**C728**
078903341 J	**C800**
078903341 J	**C800**

WOLGA	**CORAM**
406.1308080-21	**C755**
6-256801EW24	**C755**

INA FRANCE	**CORAM**
36261	**C525**
37629	**C602**
37630.1	**C704**
37734.2	**C705**
38073.12	**C601**
38149	**C703**
38153	**C700**
38392	**C535**
38950	**C701**
39508.5	**C706**
39924.1	**C702**
39990	**C708**
45442	**C506**
45605	**C507**
45986	**C505**
48559.7	**C815**
49288.6	**C772**
82798	**C631**
84666.4	**C537**
88019.2	**C536**
120180	**C709**
120182	**C707**
120475.12	**C600**
120959.1	**C738**
121287.1	**C604**
121792	**C779**
121793	**C780**
122051	**C600**
122124	**C737**
122216.3	**C545**
122868	**C781**
122980	**C546**
122985.3	**C742**
122986.5	**C743**
123000	**C769**
123132	**C707**
123368.1	**C600**
123368.1	**C600**
123369	**C601**
123624	**C518**
123629	**C727**
123630	**C515**
123631	**C517**
123633	**C523**
123634	**C516**
123635	**C509**
123636	**C526**
123638	**C532**
123640	**C500**
123641	**C501**
123642	**C771**
123643	**C630**
123648	**C650**
123649	**C527**
123650	**C529**
123653	**C739**
123697	**C733**
123747	**C754**
123753	**C543**
123754	**C544**
123755	**C539/F**
123755	**C539**
123777	**C751**
123803	**C740**
200379.2	**C524**

TENDICINGHIA DISTRIBUZIONE
BELT TIGHTENERS
TENDEURS DE COURROIE
LISTA DI COMPARAZIONE - CROSS REFERENCES - LISTE CORRISPONDANCE

201646.1	**C519**
202858	**C812**
203093	**C522**
210045	**C791**
214797	**C774**
219949	**C735**
220092	**C734**
220124	**C736**
220257	**C522**
220323	**C512**
220324	**C513**
222651	**C787**
224134	**C758**
224964	**C776**
224966	**C777**
224967	**C749**
224971	**C748**
227243	**C788**
227442	**C786**
230206	**C741**
230206	**C757**
231223	**C789**
231224	**C806**
232481	**C750**
232488	**C775**
234845	**C783**
239652	**C784**
239686	**C765**
433641	**C759**
2246692	**C785**
2277281	**C766**
12113385	**C768**
21003817	**C770**
531014810	**C794**
531030910	**C795**
531057210	**C793**
38317C	**C603**
F-11080.62	**C792**
F-122649	**C796**
F-122662.6	**C794**
F-123154.3	**C816**
F-123623	**C805**
F-124059	**C752**
F-220083	**C804**
F-220085	**C813**
F-220086	**C809**
F-220093	**C731**
F-220095	**C730**
F-220096	**C729**
F-220125	**C797**
F-220135	**C810**
F-220292	**C800**
F-231231	**C802**
F-232486	**C803**
F-801206	**C807**

IRB	**CORAM**
9102	**C750**
9124	**C768**
9174	**C773**
9187	**C539/F**
9187	**C539**
9205	**C728**
9800	**C500**
9801	**C501**
9803	**C518**
9805	**C731**
9806	**C730**
9807	**C729**
9811	**C604**
9812	**C603**
9813	**C600**
9814	**C601**
9815	**C535**
9816	**C512**
9817	**C602**
9818	**C522**
9819	**C526**
9820	**C527**
9821	**C513**
9822	**C525**
9823	**C523**
9825	**C506**
9828	**C536**
9829	**C537**
9830	**C521**
9832	**C532**
9833	**C524**
9835	**C528**
9835	**C533**
9839	**C631**
9840	**C507**
9841	**C630**
9842	**C815**
9845	**C508**
9846	**C735**
9847	**C734**
9850	**C505**
9851	**C509**
9852	**C514**
9853	**C515**
9854	**C707**
9855	**C516**
9856	**C701**
9857	**C705**
9858	**C704**
9862	**C737**
9863	**C702**
9865	**C706**
9872	**C517**
9880	**C709**
9881	**C708**
9883	**C703**
9887	**C700**
9889	**C529**
9889	**C534**
9890	**C738**
9900	**C546**
9901	**C545**
9902	**C770**
9912	**C650**
9915	**C771**
9931	**C769**
9932	**C502**
9933	**C503**
9937	**C504**
9938	**C739**
9940	**C727**
9941	**C728**
9945	**C601**
9948	**C746**
9951	**C733**
9952	**C749**
9953	**C748**
9973	**C808**
9985	**C772**
IR 9100	**C775**
IR 9104	**C803**
IR 9115	**C767**
IR 9145	**C816**
IR 9808	**C804**
IR 9848	**C810**
IR 9859	**C812**
IR 9867	**C813**
IR 9875	**C809**
IR 9922	**C805**
IR 9971	**C766**
IR9113	**C782**
IR9114	**C778**
IR9128	**C787**
IR9131	**C786**
IR9160	**C798**
IR9166	**C788**
IR9167	**C789**
IR9211	**C783**
IR9219	**C794**
IR9231	**C785**
IR9837	**C791**
IR9906	**C776**
IR9907	**C777**
IR9923	**C797**
IR9941	**C799**
IR9943	**C781**
IR9944	**C779**
IR9945	**C780**
TKR 9125	**C796**
TKR 9206	**C802**
TKR 9287	**C811**

LORETT	**CORAM**
CR 1440	**C543**
CR 1444	**C539/F**
CR 1444	**C539**
CR 1445	**C538**
CR 1449	**C544**
CR 1451	**C763**
CR 1452 P	**C754**
CR 1455	**C753**
CR 1456	**C734**
CR 1457	**C735**
CR 1461	**C785**
CR 1462	**C768**
CR 1464	**C771**
CR 1467	**C813**
CR 1473	**C769**
CR 1477	**C736**
CR 1478	**C760**
CR 1479	**C761**
CR 1480	**C757**
CR 1480P	**C741**
CR 1481	**C756**
CR 1482	**C762**
CR 1485	**C773**
CR 1487	**C758**
CR 1490	**C759**
CR 1491	**C774**
CR 1493	**C794**

TENDICINGHIA DISTRIBUZIONE
BELT TIGHTENERS
TENDEURS DE COURROIE
LISTA DI COMPARAZIONE - CROSS REFERENCES - LISTE CORRISPONDANCE

CR 1642	**C798**
CR 1643	**C728**
CR 1644	**C526**
CR 1645	**C527**
CR 1646	**C522**
CR 1647	**C536**
CR 1648	**C537**
CR 1649	**C521**
CR 1652	**C500**
CR 1653	**C501**
CR 1654	**C525**
CR 1656	**C630**
CR 1657	**C507**
CR 1658	**C506**
CR 1659	**C505**
CR 1661	**C509**
CR 1662	**C514**
CR 1663	**C515**
CR 1664	**C516**
CR 1665	**C512**
CR 1666	**C513**
CR 1667	**C517**
CR 1668	**C518**
CR 1669	**C519**
CR 1672	**C523**
CR 1673	**C532**
CR 1674	**C524**
CR 1680	**C731**
CR 1681	**C729**
CR 1682	**C730**
CR 1685	**C603**
CR 1686	**C600**
CR 1687	**C601**
CR 1688	**C602**
CR 1689	**C535**
CR 1692	**C604**
CR 1694	**C631**
CR 1696	**C810**
CR 1800	**C775**
CR 1801	**C776**
CR 1803	**C777**
CR 1810	**C750**
CR 1812	**C797**
CR 1813	**C805**
CR 1814	**C727**
CR 1817	**C770**
CR 1819	**C767**
CR 1821	**C778**
CR 1827	**C737**
CR 1828	**C739**
CR 1830	**C815**
CR 1831	**C782**
CR 1833	**C772**
CR 1834	**C529**
CR 1837	**C809**
CR 1838	**C706**
CR 1839	**C707**
CR 1841	**C703**
CR 1842	**C704**
CR 1843	**C705**
CR 1844	**C700**
CR 1845	**C701**
CR 1846	**C702**
CR 1848	**C738**
CR 1854	**C528**
CR 1855	**C779**
CR 1856	**C780**

CR 1857	**C533**
CR 1858	**C534**
CR 1860	**C650**
CR 1863	**C804**
CR 1866	**C708**
CR 1867	**C709**
CR 1873	**C791**
CR 1874	**C504**
CR 1876	**C803**
CR 1877	**C502**
CR 1878	**C503**
CR 1885	**C746**
CR 1886	**C545**
CR 1887	**C546**
CR 1893	**C781**
CR 1894	**C733**
CR 1895	**C732**
CR 1896	**C740**
CR 1898	**C749**
CR 1899	**C748**
CR 3000	**C742**
CR 3001	**C743**
CR 3002	**C788**
CR 3003	**C786**
CR 3004	**C787**
CR 3005	**C766**
CR 3007	**C808**
CR 3009	**C747**
CR 3064	**C790**
CR 3124	**C800**
CR 3129	**C799**
CR 3130	**C806**
CR 3144	**C802**
CR 3147	**C789**
CR 3152	**C807**
CR 3154	**C795**
CR 3155	**C783**
CR 3175	**C801**
CR 3206	**C816**
CR 3226	**C751**
CR 3234	**C752**
CR 3265	**C739**
CR 3289	**C796**
CR 3495	**C784**
CR 3543	**C765**
CR 3560	**C793**
CR 5119	**C811**

Q.H QTT	**CORAM**
100	**C604**
100	**C738**
101	**C737**
103	**C603**
104	**C601**
105	**C600**
107	**C602**
108	**C535**
109	**C525**
110	**C701**
111	**C707**
112	**C706**
113	**C700**
115	**C704**
116	**C705**
117	**C702**

118	**C708**
119	**C709**
123	**C703**
124	**C500**
125	**C501**
127	**C731**
128	**C797**
132	**C813**
135	**C512**
136	**C513**
137	**C505**
138	**C507**
139	**C506**
140	**C509**
141	**C516**
142	**C517**
143	**C522**
144	**C527**
145	**C519**
148	**C515**
149	**C514**
151	**C791**
153	**C770**
155	**C631**
156	**C630**
157	**C815**
158	**C534**
159	**C529**
160	**C524**
165	**C810**
166	**C809**
169	**C812**
170	**C518**
172	**C730**
174	**C729**
179	**C532**
190	**C735**
191	**C734**
193	**C736**
198	**C746**
203	**C727**
221	**C526**
223	**C523**
224	**C528**
236	**C769**
253	**C545**
254	**C546**
255	**C779**
256	**C780**
257	**C772**
279	**C778**
280	**C782**
285	**C771**
291	**C775**
297	**C777**
298	**C776**
299	**C748**
300	**C749**
427	**C781**
493	**C787**
498	**C786**
501	**C800**
504	**C799**
505	**C728**
516	**C504**
525	**C808**
526	**C766**

TENDICINGHIA DISTRIBUZIONE
BELT TIGHTENERS
TENDEURS DE COURROIE
LISTA DI COMPARAZIONE - CROSS REFERENCES - LISTE CORRISPONDANCE

544	**C739**
551	**C750**
623	**C796**
624	**C794**
680	**C798**
698	**C768**
710	**C763**
777	**C759**
838	**C740**
841	**C767**
876	**C751**
917	**C758**
936	**C799**
939	**C788**
941	**C783**
942	**C789**
950	**C816**
1019	**C811**
QTA 1060	**C795**
QTA 1109	**C773**
QTA 494	**C774**
QTA 501	**C800**
QTA 750	**C785**
QTA1016	**C807**
QTA495	**C806**
QTT173	**C804**
QTT178	**C805**
QTT847	**C803**
QTT937	**C802**
QTT968	**C801**

SKF VKM	**CORAM**
11000	**C731**
11001	**C805**
11010	**C730**
11014	**C803**
11020	**C804**
11200	**C727**
11201	**C798**
11202	**C801**
12001	**C515**
12003	**C517**
12005	**C523**
12010	**C505**
12012	**C514**
12100	**C516**
12101	**C522**
12103	**C509**
12151	**C526**
12153	**C533**
12160	**C519**
12163	**C521**
12173	**C778**
12174	**C767**
12200	**C525**
12215	**C782**
12227	**C532**
12380	**C512**
12500	**C500**
12501	**C501**
12510	**C503**
12511	**C502**
12630	**C506**
12700	**C812**
13050	**C535**
13100	**C604**
13200	**C603**
13201	**C738**
13202	**C781**
13240	**C600**
13241	**C545**
13244	**C742**
13253	**C793**
13300	**C779**
14000	**C631**
14103	**C771**
14105	**C772**
14201	**C791**
14300	**C630**
14301	**C815**
15121	**C746**
15202	**C775**
15214	**C750**
16000	**C702**
16001	**C816**
16100	**C701**
16101	**C706**
16110	**C703**
16112	**C709**
16200	**C602**
16210	**C704**
18200	**C650**
21004	**C786**
21012	**C787**
21031	**C729**
21032	**C797**
21052	**C799**
21130	**C788**
21131	**C789**
21142	**C783**
21147	**C784**
21201	**C728**
21202	**C802**
22151	**C527**
22153	**C529**
22153	**C534**
22160	**C518**
22163	**C528**
22173	**C739**
22174	**C740**
22242	**C733**
22380	**C513**
22385	**C512**
22510	**C504**
22630	**C507**
23120	**C737**
23213	**C737**
23240	**C601**
23241	**C546**
23244	**C743**
23300	**C780**
24100	**C770**
25150	**C749**
25152	**C748**
25200	**C810**
25201	**C809**
25212	**C776**
25213	**C777**
26100	**C700**
26101	**C707**
26102	**C708**
26114	**C751**
26125	**C751**
26211	**C705**
28001	**C813**
31002	**C773**
31004	**C774**
31007	**C806**
31010	**C800**
31059	**C795**
32005	**C763**
32006	**C753**
32009	**C539/F**
32009	**C539**
32016	**C538**
32031	**C765**
33002	**C769**
33003	**C768**
33012	**C796**
33013	**C794**
35002	**C758**
35007	**C785**
36031	**C752**
38001	**C735**
38012	**C734**
75629	**C811**
76102	**C808**
80000	**C766**
337155	**C763**
22174-22179	**C740**

SNT	**CORAM**
374008	**C543**
374016	**C544**
374081	**C749**
374084	**C788**
374086	**C787**
374089	**C742**
374135	**C514**
374138	**C515**
374140	**C506**
374142	**C505**
374143	**C507**
374145	**C513**
374148	**C512**
374150	**C516**
374152	**C518**
374160	**C517**
374165	**C522**
374177	**C532**
374179	**C527**
374180	**C526**
374183	**C539/F**
374192	**C529**
374306	**C502**
374308	**C503**
374310	**C500**
374312	**C501**
374327	**C602**
374412	**C631**
374413	**C630**
374503	**C600**
374507	**C603**
374514	**C708**
374523	**C601**
374540	**C700**
374541	**C703**

374544	**C707**
374545	**C705**
374546	**C706**
374547	**C704**
374605	**C734**
374020/P	**C754**
374036/P	**C741**
374183/P	**C539**

CUSCINETTI RUOTA
WHEEL BEARING
ROLEMENTS ROUE

ALFA ROMEO

MODELLO	ANNO	ANT I	ANT E	NOTE	POST I	POST E	NOTE
ALFA 6							
	79-85	**CR014**	**CR013**		**CR004**		Singolo
ALFA 33							
	83->	**CR004**		Singolo	**CR005**	**CR006**	
1.2-1.3-1.5-1.7	90->	**CR016**		Singolo	**CR005**	**CR006**	
4x4	83-89	**CR004**		Singolo			
4x4	90->	**CR016**		Singolo			
ALFA 75							
	79->	**CR005**	**CR006**		**CR004**		Singolo
Quadrifoglio verde	85-87	**CR005**	**CR013**		**CR004**		Singolo
Turbo	89->	**CR014**	**CR013**				
ALFA 90							
	85->	**CR005**	**CR006**		**CR004**		Singolo
Quadrifoglio oro	85-87	**CR005**	**CR013**		**CR004**		Singolo
ALFA 145/146							
1.3-1.6-1.7-1.9 TD	94->	**CR016**		Singolo			
ALFA 155							
1.7-1.8-2.0-1.9 TD	92->	**CR016**		Singolo			
ALFA 164							
	88->	**CR016**		Singolo			
ALFASUD							
	71-87				**CR005**	**CR006**	
	87-89	**CR004**		Singolo			
ALFASPRINT							
	83-89	**CR004**		Singolo	**CR005**	**CR006**	

CUSCINETTI RUOTA
WHEEL BEARING
ROLEMENTS ROUE

follows ALFA ROMEO

MODELLO	ANNO	ANT I	ANT E	NOTE	POST I	POST E	NOTE
ALFETTA							
1.6-1.8	->6.76		**CR006**		**CR004**		Singolo
2.0 GT-GTV	74-76	**CR023**	**CR006**		**CR004**		Singolo
1.6 RTD - 1.6 RTI	72-76	**CR023**	**CR006**		**CR004**		Singolo
1.6-1.8-2.0 GT-GTV	76-79	**CR005**	**CR006**		**CR004**		Singolo
1.6-1.8-2.0 GT-GTV	80->	**CR005**	**CR013**		**CR004**		Singolo
ARNA							
	83-86	**CR004**		Singolo	**CR005**	**CR013**	
GTV							
2.0	85-87	**CR005**	**CR013**		**CR004**		Singolo
2.5 6	81-87	**CR005**	**CR013**		**CR004**		Singolo
2.0 T.S 16v	95->	**CR016**		Singolo			
GIULIETTA							
1.3-1.6	78-79	**CR005**	**CR006**		**CR004**		Singolo
1.3-1.6-1.8	80-85	**CR005**	**CR013**		**CR004**		Singolo
SPIDER							
2.0 T.S	95->	**CR016**		Singolo			

4

CUSCINETTI RUOTA
WHEEL BEARING
ROLEMENTS ROUE

AUDI

MODELLO	ANNO	ANT I	ANT E	NOTE	POST I	POST E	NOTE
50							
	73->				**CR005**	**CR006**	
60							
	->69					**CR006**	
	69-72				**CR005**	**CR006**	
75							
	->69					**CR006**	
	69-72				**CR005**	**CR006**	
80							
	73-88	**CR007**		Singolo	**CR005**	**CR006**	
	88-91				**CR005**	**CR006**	
	91->				**CR005**	**CR013**	
Quattro	83-88	**CR007**		Singolo	**CR004**	**CR004**	
1.6v	91->				**CR005**	**CR0013**	
90							
Super	->69					**CR006**	
Super	69-72				**CR005**	**CR006**	
	84->	**CR007**		Singolo	**CR005**	**CR006**	
5 Cil.	88->				**CR005**	**CR006**	
Quattro	84-87	**CR007**		Singolo	**CR004**	**CR004**	
Quattro	87->				**CR004**	**CR004**	
100							
	75-76	**CR004**		Singolo	**CR005**	**CR013**	
Avant	76-85	**CR004**		Singolo	**CR005**	**CR013**	
	85-87				**CR005**	**CR013**	
	88->				**CR005**	**CR013**	
Quattro-Quat.Avant	84-88	**CR004**		Singolo			
200							
	85->	**CR004**		Singolo	**CR005**	**CR013**	
	85-87				**CR005**	**CR013**	
	88->				**CR005**	**CR013**	
Quattro-Quat.Avant	84-88	**CR004**		Singolo			

4

CUSCINETTI RUOTA
WHEEL BEARING
ROLEMENTS ROUE

follows AUDI

MODELLO	ANNO	ANT I	ANT E	NOTE	POST I	POST E	NOTE
A4							
1.6-1.8-2.6-2.8	95->				**CR005**	**CR013**	
1.9 TDI	95->				**CR005**	**CR013**	
A6/A6 AVANT							
	95->				**CR005**	**CR013**	
CABRIOLET							
2.0-2.3-2.6-2.8	91->				**CR005**	**CR013**	
COUPE'							
	81->	**CR007**		Singolo	**CR005**	**CR006**	
Quattro	84->	**CR007**		Singolo	**CR004**		Singolo
QUATTRO							
	80-85	**CR004**		Singolo	**CR004**		Singolo

AUSTIN-ROVER

ALLEGRO							
1.1-1.3-1.5-1.7	73-83					**CR006**	
ROVER 2000-2200							
	->76	**CR014**	**CR013**				
ROVER 3500-3500S							
	68-75	**CR014**	**CR013**				
SD	76->	**CR014**	**CR013**				

CUSCINETTI RUOTA
WHEEL BEARING
ROLEMENTS ROUE

BMW

MODELLO	ANNO	ANT I	ANT E	NOTE	POST I	POST E	NOTE
1500							
	62-64	**CR023**	**CR006**				
1600							
	66-67	**CR023**	**CR006**				
TI	66-67	**CR023**	**CR006**				
TI-GT	67->	**CR005**	**CR006**				
1800							
	66->	**CR014**	**CR013**				
1802							
	67->	**CR005**	**CR006**				
2000							
	66->	**CR014**	**CR013**				
2002							
	67->	**CR005**	**CR006**				
TI	68->	**CR014**	**CR013**				
2200							
TI	68->	**CR014**	**CR013**				
SERIE 3							
315-315-318-320	->76	**CR005**	**CR006**				
320i	->76	**CR014**	**CR013**				
316-318-320	76->	**CR005**	**CR006**				
320i	76-82	**CR014**	**CR013**				
320/6-323i	->82	**CR014**	**CR013**				
316-316i-318i-320i	82->				**CR012**		Singolo
323i	82-85				**CR012**		Singolo
320i cabrio-320i tour.	86->				**CR012**		Singolo
325E	->85				**CR012**		Singolo
323i-325E	85->				**CR004**		Singolo
316-320i-cabrio ABS	82-85				**CR012**		Singolo
320i Tour.-323i ABS	82-85				**CR012**		Singolo
325E ABS	->85				**CR012**		Singolo

4

CUSCINETTI RUOTA
WHEEL BEARING
ROLEMENTS ROUE

follows BMW

MODELLO	ANNO	ANT I	ANT E	NOTE	POST I	POST E	NOTE
SERIE 3							
316-316i-320i ABS	85->				**CR004**		Singolo
320i cabrio-323iABS	85->				**CR004**		Singolo
320i Touring ABS	85->				**CR004**		Singolo
325i-325i cabrio	86				**CR004**		Singolo
325i-325i cabrioABS	85->				**CR004**		Singolo
325i Touring ABS	88->				**CR004**		Singolo
325E ABS	85->				**CR004**		Singolo
324 D-TD ABS	85->				**CR004**		Singolo
324 TD Touring ABS	87->				**CR004**		Singolo
324 D-TD-TD Tour.	85->				**CR004**		Singolo
325i-325i cabrio	->86				**CR004**		Singolo
316i-318i	91->				**CR012**		Singolo
320i-325i	91->				**CR004**		Singolo
M3-M3 cabrio	86->				**CR004**		Singolo
318i-318 Touring	94->				**CR004**		Singolo
318 TDS-318 Cabrio	94->				**CR004**		Singolo
316-318 Compact	93->				**CR012**		Singolo
318 TDS Touring	95->				**CR004**		Singolo
SERIE 5							
518-520-525-528	->80	**CR014**	**CR013**				
528i (2.5-2.8-3.0)	->80	**CR014**	**CR013**				
518-520-525-528	80->	**CR014**	**CR013**				
535i	73-81	**CR032**	**CR033**				
SERIE 6							
628 CSI-635 CSI	->86	**CR014**	**CR013**				
628-630-633-635 CSI (E24)	78-82	**CR032**	**CR033**				
SERIE 7							
728-730-732-733-735 (E23)	77-86	**CR032**	**CR033**				
740-745	77-86	**CR032**	**CR033**				

4

CUSCINETTI RUOTA
WHEEL BEARING
ROLEMENTS ROUE

CITROËN

MODELLO	ANNO	ANT I	ANT E	NOTE	POST I	POST E	NOTE
AX							
1.0-1.1-1.4	87-98				**CR042**		Singolo
1.4	91->		**CR018**				
1.4 D	89-95				**CR042**		Singolo
1.5 D	95->		**CR018**		**CR042**		Singolo
GT-GTI	89-91		**CR018**		**CR025**		Singolo
Sport	87-91				**CR042**		Singolo
BERLINGO							
1.1-1.4	96->		**CR040**				
1.8 D - 1.9 D	96->		**CR040**				
BX							
1.4-1.6-1.9	84->	**CR040**		Singolo			
1.7 D - 1.7 TD	87-	**CR040**		Singolo			
1.9 D - 1.9 GTI	84->	**CR040**		Singolo			
1.9 4x4	88->	**CR040**		Singolo		**CR040**	
C25							
1000	82-94	**CR051**	**CR051**		**CR049**	**CR050**	
1300	82->	**CR051**	**CR051**		**CR049**	**CR050**	
1400	87->	**CR051**	**CR051**		**CR049**	**CR050**	
1800	86-94	**CR051**	**CR051**				
4x4	86-92	**CR051**	**CR051**				
EVASION							
1.8 - 2.0	97-02	**CR063**		Singolo			
1.9 TD - 2.0 -2.0 Turbo C.T.	94-02	**CR063**		Singolo			
2.0 16V	98-02	**CR063**		Singolo			
2.0 HDI	99-02	**CR063**		Singolo			
2.1 TD	96-02	**CR063**		Singolo			
JUMPER							
1000/1400 4x2	94-99	**CR051**	**CR051**		**CR049**	**CR050**	
1000/1400 4x4	96-99	**CR051**	**CR051**		**CR051**	**CR051**	
1800 4x4	96-99				**CR051**	**CR051**	
JUMPY							
1,6 - 1,9 TD	95->	**CR063**		Singolo			
1,9 D	95-98	**CR063**		Singolo			
2,0 - 2,0 Hdi - 2,0 i 16V	00->	**CR063**		Singolo			

CUSCINETTI RUOTA
WHEEL BEARING
ROLEMENTS ROUE

follows CITROËN

MODELLO	ANNO	ANT I	ANT E	NOTE	POST I	POST E	NOTE
JUMPY Furgonato							
1,6 - 1,9 TD	95->	**CR063**		Singolo			
1,9 D	98->	**CR063**		Singolo			
2,0 Hdi	99->	**CR063**		Singolo			
2,0 i 16V	00->	**CR063**		Singolo			
JUMPY pianale piatto							
1,9 TD - 2,0 Hdi	99->	**CR063**		Singolo			
LN							
	76-79				**CR048**		
LNA							
	79-80				**CR048**		
	80-86				**CR048**	**CR028**	
SAXO							
1.0-1.1 (NO ABS)	96-99		**CR018**		**CR042**		Singolo
SAXO (S0,S1)							
1.0 X - 1.1 X, SX - 1.4 VTS	96->	**CR062**		Singolo			
1.5 D - 1.6 VTL - 1.6 VTS	96->	**CR062**		Singolo			
SAXO							
1.1-1.4-1.6	96->		**CR018**		**CR025**		Singolo
1.6 16V ABS	96->		**CR018**				
1.6 i	96-99		**CR018**		**CR025**		Singolo
1.5 D	96->		**CR018**		**CR025**		Singolo
VISA							
	78-80				**CR048**		
	80-84				**CR048**	**CR028**	
0.7-1.0-1.1-1.4	85-89				**CR048**	**CR028**	
1.6 GTI - 1.8 D	85-89		**CR018**		**CR025**		Singolo
XANTIA							
1.6-1.8-2.0	93->	**CR040**		Singolo			
1.9 D - 1.9 TD	94->		**CR040**				

CUSCINETTI RUOTA
WHEEL BEARING
ROLEMENTS ROUE

follows CITROËN

MODELLO	ANNO	ANT I	ANT E	NOTE	POST I	POST E	NOTE
XSARA							
1.4 - 1.6 - 1.8 - 2.0	97->				**CR025**		Singolo
1.5 D - 1.9 D - 1.9 TD	97->				**CR025**		Singolo
XSARA (N1)							
1.4 i	97	**CR062**		Singolo			
1.5 D - 1.6 i	97-00	**CR062**		Singolo			
XSARA BREAK (N2)							
1.4 i	97	**CR062**		Singolo			
1.5 D - 1.6 i	97-00	**CR062**		Singolo			
XSARA COUPE'							
1.4 i	98	**CR062**		Singolo			
1.6 i	98-00	**CR062**		Singolo			
ZX							
1.1-1.4-1.6 S/ABS	91->		**CR018**		**CR025**		Singolo
1.1-1.4-1.6 ABS	91->	**CR040**		Singolo	**CR025**		Singolo
1.8-2.0-2.0 16v	93->	**CR040**		Singolo	**CR025**		Singolo
1.8-1.9 Diesel	92->	**CR040**		Singolo	**CR025**		Singolo
1.9 Turbo Diesel	93->	**CR040**		Singolo	**CR025**		Singolo

CUSCINETTI RUOTA
WHEEL BEARING
ROLEMENTS ROUE

MODELLO	ANNO	ANT I	ANT E	NOTE	POST I	POST E	NOTE
DAEWOO							
CIELO							
1500 MPI (No ABS)	94-96		**CR008**		**CR005**	**CR006**	
1500 MPI (ABS)	94-96		**CR012**		**CR005**	**CR006**	
1800 MPI (No ABS)	94-96		**CR008**		**CR005**	**CR006**	
1800 MPI (ABS)	94-96		**CR012**		**CR005**	**CR006**	
ESPERO							
1.5-1.6-2.0 (No ABS)	92-96		**CR012**		**CR005**	**CR006**	
1.5-1.6-2.0 (ABS)	92-96		**CR012**				
1.8 (No ABS)	94-96		**CR012**		**CR005**	**CR006**	
LEMANS							
	92-93		**CR008**		**CR005**	**CR006**	
DAF							
44							
	67-74	**CR023**	**CR006**				
55							
	68-72	**CR023**	**CR006**				
66							
	72-75	**CR023**	**CR006**				
DAIHATSU							
CARMANT							
1.3-1.5-1.6	78->	**CR005**	**CR006**				
1.6	82->	**CR005**	**CR006**				
DELTA							
1.3	79->		**CR006**				

4

CUSCINETTI RUOTA
WHEEL BEARING
ROLEMENTS ROUE

DATSUN-NISSAN

MODELLO	ANNO	ANT I	ANT E	NOTE	POST I	POST E	NOTE
ATLAS CABSTAR							
F22	82-89	**CR022**	**CR024**				
BLUEBIRD							
160B-180B	->75		**CR006**				
160B-180B	75->	**CR014**	**CR013**				
CHERRY							
	79->				**CR005**	**CR013**	
LAUREL							
C30	72-81	**CR014**	**CR013**				
SKYLINE							
160K-180K	->75		**CR006**				
160K-180K-240KGT	75->	**CR014**	**CR013**				
SUNNY							
120Y	75->	**CR014**	**CR013**				
	79->		**CR006**				
URVAN							
E21-E23-E24	82-87	**CR022**	**CR024**				
VIOLET							
140J-160J-510	77->		**CR006**				
140S-160S	73-77	**CR014**	**CR013**				

4

CUSCINETTI RUOTA
WHEEL BEARING
ROLEMENTS ROUE

DE TOMMASO

MODELLO	ANNO	ANT I	ANT E	NOTE	POST I	POST E	NOTE
PANTERA							
GTS-GT5-GT5 S		**CR014**	**CR013**				
DEAUVILLE							
		CR014	**CR013**				
LONGCHAMP							
		CR014	**CR013**				

FERRARI

208							
GTB TURBO		**CR014**	**CR013**				
GTS TURBO		**CR014**	**CR013**				
328							
GTB-GTS		**CR014**	**CR013**				

CUSCINETTI RUOTA
WHEEL BEARING
ROLEMENTS ROUE

FIAT

MODELLO	ANNO	ANT I	ANT E	NOTE	POST I	POST E	NOTE
124							
	67-74	**CR020**	**CR013**		**CR003**		Singolo
Rally	81-83	**CR014**	**CR013**		**CR003**		Singolo
125							
	->77	**CR014**	**CR013**		**CR003**		Singolo
	81-83	**CR014**	**CR013**		**CR003**		Singolo
126							
	77-93	**CR046**	**CR045**		**CR047**	**CR047**	
600	72-77	**CR060**	**CR061**				
127							
	->77	**CR001**		Singolo			
Fiorino	->78	**CR001**		Singolo			
128							
	->76	**CR001**		Singolo			
	76-79	**CR001**		Singolo			
tutte le versioni	79-84	**CR002**		Singolo			
131							
	75-84	**CR010**	**CR013**		**CR003**		Singolo
132							
	72-81	**CR014**	**CR013**		**CR003**		Singolo
238							
		CR022	**CR022**		**CR022**	**CR024**	
500							
D	63-66				**CR047**	**CR047**	
F	67-76				**CR047**	**CR047**	
L	67-76				**CR047**	**CR047**	
0.5	65-75	**CR060**	**CR061**				
0.6	73-76	**CR060**	**CR061**				

4

CUSCINETTI RUOTA
WHEEL BEARING
ROLEMENTS ROUE

follows FIAT

MODELLO	ANNO	ANT I	ANT E	NOTE	POST I	POST E	NOTE
600							
D	64-70	**CR046**	**CR045**		**CR047**	**CR047**	
850							
	64-72	**CR046**	**CR045**				
ARGENTA							
	81-85	**CR014**	**CR013**		**CR003**		Singolo
BARCHETTA							
1.8 i.e 16v	94->	**CR016**		Singolo			
CINQUECENTO							
	92->	**CR017**		Singolo			
COUPE'							
2.0 i.e 16v	94->	**CR016**		Singolo			
CROMA							
1.6-2.0 CHT i.e	85->	**CR016**		Singolo			
2.0 i.e Turbo	85->	**CR016**		Singolo			
2.0 i.e Autom.	85->	**CR016**		Singolo			
Diesel-TD	85->	**CR016**		Singolo			
BRAVO/BRAVA							
1.4-1.6	95->	**CR018**		Singolo			
1.9 Diesel	95->	**CR018**		Singolo			
DUCATO							
I° 10	82-92	**CR051**	**CR051**		**CR049**	**CR050**	
I° 13	82-93	**CR051**	**CR051**		**CR049**	**CR050**	
I° 14	86-93	**CR051**	**CR051**		**CR049**	**CR050**	
I° 18	86-93	**CR051**	**CR051**				
II 10 (4x2) - 14 (4x2)	94-99	**CR051**	**CR051**		**CR049**	**CR050**	
II 10 (4x4) - 14 (4x4)	96-99	**CR051**	**CR051**		**CR051**	**CR051**	
II 18 (4x4)	96-99				**CR049**	**CR050**	

CUSCINETTI RUOTA
WHEEL BEARING
ROLEMENTS ROUE

follows FIAT

MODELLO	ANNO	ANT I	ANT E	NOTE	POST I	POST E	NOTE
DUNA							
60-70-Weekend	87->		**CR002**	Singolo			
Diesel Weekend	87->		**CR002**	Singolo			
FIORINO							
900-1.0	78-79		**CR001**	Singolo			
1.0-1.1-1.3-1.5	79-88		**CR002**	Singolo			
1.3-1.7 Diesel	87-88		**CR002**	Singolo			
1.1-1.3-1.5	88-93		**CR002**	Singolo			
1.3-1.7 Diesel	88-93		**CR002**	Singolo			
1.1-1.3-1.5	93->		**CR016**	Singolo			
1.3-1.7 Diesel	93->		**CR016**	Singolo			
furgonato	88->		**CR002**	Singolo			
MAREA							
1.6-1.8	96->		**CR016**	Singolo			
1.9 Turbo D.	96->		**CR016**	Singolo			
1.4 12v	96->		**CR018**	Singolo			
MULTIPLA							
(Non ABS)	98-99		**CR016**	Singolo			
PALIO							
1.0 - 1.2 - 1.4 - 1.4 Cat. -1.5- 1.6 16V	96->		**CR002**	Singolo			
EUROPA	97-00		**CR002**	Singolo			
PALIO WEEKEND							
1.2 - 1.6 16V - 1.7 TD	96-01		**CR002**	Singolo			
PUNTO							
1.7-1.4 GT-1.8 TD	93->		**CR016**	Singolo			
1.1	93->		**CR017**	Singolo			
1.2-1.6	93->		**CR018**	Singolo			
1.2-1.6 Cabrio	93->		**CR018**	Singolo			
REGATA							
75-85-100	83-85		**CR002**	Singolo			
Diesel	83-85		**CR002**	Singolo			
Weekend	83-85		**CR002**	Singolo			
1.3-1.5	86-87		**CR002**	Singolo			
Weekend	86-87		**CR002**	Singolo			

CUSCINETTI RUOTA
WHEEL BEARING
ROLEMENTS ROUE

follows FIAT

MODELLO	ANNO	ANT I	ANT E	NOTE	POST I	POST E	NOTE
RITMO							
60-65-75	78-82		**CR002**	Singolo			
Diesel	80-87		**CR002**	Singolo			
Turbo Diesel	86-87		**CR002**	Singolo			
Super 75-85	81-82		**CR002**	Singolo			
105 TC	81-82		**CR002**	Singolo			
ES-60-70-85-105 TC	83-84		**CR002**	Singolo			
60-70-85-100	85-87		**CR002**	Singolo			
125-130 TC	82-87		**CR016**	Singolo			
Cabriolet 100 1.6	85-87		**CR002**	Singolo			
Cabriolet 50 1.3	85-87		**CR002**	Singolo			
Cabriolet 85 1.5	80-89		**CR002**	Singolo			
RITMO I							
55 diesel 1.7	79-82		**CR002**	Singolo			
60 1.0	78-82		**CR002**	Singolo			
65-70-75 1.3	78-85		**CR002**	Singolo			
75 1.5 / 1.5 i.e	78-87		**CR002**	Singolo			
85 1.5	81-82		**CR002**	Singolo			
90 i.e 1.6	85-87		**CR002**	Singolo			
SCUDO combinato							
1,6 - 1,9 TD - 1,9 TD Eco	96->		**CR063**	Singolo			
1,9 D	96-98		**CR063**	Singolo			
2,0 16V	00->		**CR063**	Singolo			
2,0 JTD	99->		**CR063**	Singolo			
SCUDO furgonato							
1,6 - 1,9 D - 1,9 TD	96->		**CR063**	Singolo			
2,0 JTD	99->		**CR063**	Singolo			
SIENA							
EUROPA	97-00		**CR002**	Singolo			
TALENTO							
	91-94					**CR050**	
TEMPRA							
1.4-1.6	89->		**CR018**	Singolo			
Diesel	89->		**CR018**	Singolo			
SW 1.4-1.6	89->		**CR018**	Singolo			
SW TD	89->		**CR018**	Singolo			
1.8-2.0 i.e	89->		**CR016**	Singolo			
Turbo Diesel	89->		**CR016**	Singolo			
SW 1.8-2.0 i.e	89->		**CR016**	Singolo			
SW TD	89->		**CR016**	Singolo			

CUSCINETTI RUOTA
WHEEL BEARING
ROLEMENTS ROUE

follows FIAT

MODELLO	ANNO	ANT I	ANT E	NOTE	POST I	POST E	NOTE
TIPO							
1.6-Diesel	88->		**CR018**	Singolo			
Turbo Diesel	88->		**CR016**	Singolo			
1.6-2.0 16v i.e	89->		**CR016**	Singolo			
1.1-1.4	88->		**CR017**	Singolo			
ULYSSE (220)							
1,8	97-02		**CR063**	Singolo			
1,9 TD	95-02		**CR063**	Singolo			
2,0 - 2,0 Turbo	94-02		**CR063**	Singolo			
2,0 16V	98-02		**CR063**	Singolo			
2,0 JTD	99-02		**CR063**	Singolo			
2,1 TD	96-99		**CR063**	Singolo			
UNO							
45-55-60	83->		**CR001**	Singolo			
Diesel-70SX	84->		**CR001**	Singolo			
45 Fire	86->		**CR001**	Singolo			
1.1-1.3-1.5 SX	88->		**CR001**	Singolo			
900-1.0-1.1	89->		**CR001**	Singolo			
Turbo i.e	85->		**CR002**	Singolo			
Turbo Diesel-CS	86->		**CR002**	Singolo			
1.9 D	89-94		**CR002**	Singolo			
50 1.1 / 1.1 i.e	86-93		**CR002**	Singolo			
55 / 60 1.1	83-92		**CR002**	Singolo			
1370 i.e Turbo	88-92		**CR002**	Singolo			
X 1/9							
1.3	->79		**CR001**	Singolo		**CR001**	Singolo
1.5 Five speed	85->		**CR002**	Singolo			

4

CUSCINETTI RUOTA
WHEEL BEARING
ROLEMENTS ROUE

FORD

MODELLO	ANNO	ANT I	ANT E	NOTE	POST I	POST E	NOTE
12M							
	62-70				**CR023**	**CR006**	
15M							
	66-70				**CR023**	**CR006**	
17M							
	61-72	**CR023**	**CR006**				
20M							
	61-72	**CR023**	**CR006**				
26M							
	61-72	**CR023**	**CR006**				
CAPRI							
	68-74		**CR013**				
	74->		**CR013**				
3.0	77->	**CR005**	**CR006**				
CONSUL							
	72->	**CR005**	**CR006**				
CORCEL							
			CR057				LM78349/10
GT			**CR057**				LM78349/10
CORTINA							
1.3-1.6	70-82	**CR023**	**CR006**				
1.3-1.6 BREAKS	70-82	**CR023**	**CR006**				
2.0-2.3	70-82	**CR023**	**CR006**				

CUSCINETTI RUOTA
WHEEL BEARING
ROLEMENTS ROUE

follows FORD

MODELLO	ANNO	ANT I	ANT E	NOTE	POST I	POST E	NOTE
ESCORT							
	->68	**CR023**	**CR006**				
	68->	**CR023**	**CR006**				
1.1-1.3-1.6	75-80	**CR023**	**CR006**				
1.1-1.3-1.6	80->	**CR011**	**CR011**		**CR005/CR014**	**CR006/CR013**	
SW	80->	**CR011**	**CR011**		**CR005/CR014**	**CR006/CR013**	
RS 2000	76-80		**CR013**				
1.1-1.3-1.4-1.6	91->	**CR012**		Singolo	**CR043**	**CR043**	
1.8-2.0-1.8 Diesel	90->	**CR012**		Singolo	**CR043**	**CR043**	
FIESTA							
1.0-1.1	77-80				**CR023**	**CR006**	
900-1.0-1.1-1.3-1.6	80->	**CR011**	**CR011**		**CR023**	**CR006**	
XR2	80->	**CR011**	**CR011**		**CR023**	**CR006**	
	89-99	**CR012**		Singolo	**CR043**	**CR043**	
FOCUS							
					CR055		Singolo
GRANADA							
BEZ-DIESEL	72-85	**CR005**	**CR006**				
KA							
	96-99	**CR012**		Singolo	**CR043**	**CR043**	
KOMBI							
	70->		**CR006**				
ORION							
1.3-1.6	83->	**CR011**	**CR011**		**CR005**	**CR006**	
1.3-1.4-1.6	91-93	**CR012**		Singolo	**CR043**	**CR043**	
1.8-2.0 16v-1.8 D.	90-93	**CR012**		Singolo	**CR043**	**CR043**	
PUMA							
	97-99				**CR043**	**CR043**	

CUSCINETTI RUOTA
WHEEL BEARING
ROLEMENTS ROUE

MODELLO	ANNO	ANT I	ANT E	NOTE	POST I	POST E	NOTE
follows FORD							
P100							
	82-87	**CR005**	**CR006**				
P4							
	66->					**CR006**	
P6							
	66->					**CR006**	
P7							
15M-17M-20M	66->		**CR006**				
SIERRA							
1.3-1.6-1.8-2.0-2.3	83->	**CR011**	**CR011**		**CR011**	**CR011**	
TRANSIT							
	65->	**CR014**	**CR013**				
	92->		**CR013**				
TAUNUS							
1.3-1.6-2.0-2.3	70->	**CR023**	**CR006**				
1.3-1.6 BREAKS	70->	**CR023**	**CR006**				
HONDA							
PRELUDE							
	86->				**CR013**	**CR005**	
QUINTET							
	81-83				**CR013**	**CR005**	

CUSCINETTI RUOTA
WHEEL BEARING
ROLEMENTS ROUE

HYUNDAI							
MODELLO	ANNO	ANT I	ANT E	NOTE	POST I	POST E	NOTE
PONY1-2							
1.4-1.5	82-88	**CR006**	**CR023**				
STELLAR							
KSC-MIP	86-87	**CR006**	**CR023**				
1.8-2.0	90->	**CR006**	**CR023**				
KIA							
AVELLA							
1.3	94->				**CR023**	**CR006**	
CAPITAL							
1.5-1.8	90-94				**CR023**	**CR006**	
CONCORD							
1.8-2.0	92-94	**CR023**	**CR006**				
LADA							
LADA							
1.1-1.3-1.5-1.6	74->	**CR020**	**CR013**		**CR044**		Singolo
NIVA							
4x4	78-90	**CR049**	**CR049**				
SAMARA							
	85->	**CR008**		Singolo	**CR001**		Singolo
VAZ							
2101-2102-21011	69->	**CR020**	**CR013**				
2103-2106	69->	**CR020**	**CR013**				

CUSCINETTI RUOTA
WHEEL BEARING
ROLEMENTS ROUE

IVECO

MODELLO	ANNO	ANT I	ANT E	NOTE	POST I	POST E	NOTE
238							
		CR022	**CR022**				

LANCIA/AUTOBIANCHI

MODELLO	ANNO	ANT I	ANT E	NOTE	POST I	POST E	NOTE
A 112							
	82-86	**CR001**		Singolo			
BETA							
Montecarlo	72-81	**CR001**		Singolo	**CR016**		Singolo
DEDRA							
1.6	89->	**CR018**		Singolo			
1.8-2.0	89->	**CR016**		Singolo			
1.9 Turbo Diesel	89->	**CR016**		Singolo			
4WD	91-92	**CR016**		Singolo	**CR016**		Singolo
1.6	93->	**CR018**		Singolo			
1.8-2.0-2.0 Turbo	94->	**CR016**		Singolo			
DELTA							
1.3-1.5	80->	**CR002**		Singolo			
1.6	83->	**CR002**		Singolo			
1.6 i.e Turbo	88-93	**CR002**		Singolo			
4WD	86->	**CR002**		Singolo	**CR002**		Singolo
Diesel-Turbo Diesel	85->	**CR002**		Singolo			
HF	85->	**CR002**		Singolo			
1.6	93->	**CR018**		Singolo			
1.8-2.0 16v	93->	**CR016**		Singolo			
1.9 Turbo Diesel	93->	**CR016**		Singolo			
4 WD	88-94	**CR016**		Singolo	**CR016**		Singolo
DELTA I							
1.6 G.T	82-86	**CR002**		Singolo			
1.6 G.T i.e	86-88	**CR002**		Singolo			
HF Turbo	87-89	**CR002**		Singolo			
1.8 S4	85-88	**CR002**		Singolo			
1.9 Turbo DS	86-89	**CR002**		Singolo			
2.0 16V HF	89-91	**CR002**		Singolo			
2.0 HF Integrale	87-89	**CR002**		Singolo			

CUSCINETTI RUOTA
WHEEL BEARING
ROLEMENTS ROUE

follows LANCIA/AUTOBIANCHI

MODELLO	ANNO	ANT I	ANT E	NOTE	POST I	POST E	NOTE
PRISMA							
1.3-1.5	80->	**CR002**		Singolo			
1.6	83->	**CR002**		Singolo			
1.6 i.e	86-89	**CR002**		Singolo			
1.6 i.e super	87-89	**CR002**		Singolo			
4WD	86->	**CR002**		Singolo		**CR002**	Singolo
Diesel-Turbo Diesel	85->	**CR002**		Singolo			
THEMA							
2.0 i.e-2.0 16v-	84->	**CR016**		Singolo			
2.0 Turbo i.e- 2.8 6V	85->	**CR016**		Singolo			
Turbo Diesel	85->	**CR016**		Singolo			
8.32 Ferrari	85-92	**CR016**		Singolo			
Y							
1.2-1.4	95->	**CR018**		Singolo			
ZETA (220)							
2,0 16V	98-02	**CR063**		Singolo			
2,0 JTD	99-02	**CR063**		Singolo			
2,0 Turbo	95-02	**CR063**		Singolo			
2,1 td	96-99	**CR063**		Singolo			

MASERATI

BITURBO							
S-420-425		**CR014**	**CR013**				
Spyder		**CR014**	**CR013**				
Quattro PORTE 4900							
		CR014	**CR013**				

4

CUSCINETTI RUOTA
WHEEL BEARING
ROLEMENTS ROUE

MAZDA

MODELLO	ANNO	ANT I	ANT E	NOTE	POST I	POST E	NOTE
121							
1.1-1.3 RTI - RTD	86-	**CR023**	**CR006**				
(I) 1.1- 1.3	87-90	**CR056**	**CR056**				
(II) 1.3 16v	90-96	**CR056**	**CR056**				
323							
			CR006				
da ch 500001	81->					**CR006**	
1.1-1.3-1.5-1.6	85-88				**CR005**	**CR013**	
BREAKS 2WD	86-95				**CR013**		
(II) 1.3-1.5	81-86	**CR056**	**CR056**				
(II Hatchback) 1.3-1.5	80-85	**CR056**	**CR056**				
(III) 1.3-1.5-1.5i-1.5iT	85-89	**CR056**	**CR056**				
(III) 1.6GT-1.6GT Turbo-1.7D	85-91	**CR056**	**CR056**				
(III Hatchback) 1.1-1.3-1.4	85-89	**CR056**	**CR056**				
(III Hatchback) 1.5-1.5i-1.5iT	85-89	**CR056**	**CR056**				
(III Hatchback) 1.6-1.6GT	85-89	**CR056**	**CR056**				
(III Hatchback)1.6GTT 4WD	87-91	**CR056**	**CR056**		**CR056**	**CR056**	
(III Hatchback) 1.6GT T-1.7 D	85-91	**CR056**	**CR056**				
(III Station Wagon) 1.5-1.6-1.7D	86-95	**CR056**	**CR056**				
(III Station Wagon)1.6 4X4	87-91	**CR056**	**CR056**		**CR056**	**CR056**	
616							
1.6	71-78		**CR006**				
626							
	78-82		**CR013**				
	83-87				**CR023**	**CR013**	
808							
	72-78		**CR006**				
818							
			CR013				
929							
L	->82		**CR013**				
(II) 2.0-2.0i-Coupé	84-87	**CR056**	**CR056**				

CUSCINETTI RUOTA
WHEEL BEARING
ROLEMENTS ROUE

follows MAZDA

MODELLO	ANNO	ANT I	ANT E	NOTE	POST I	POST E	NOTE
1000							
	70-78		**CR006**				
1300							
	70-78		**CR006**				
DEMIO							
1.3 16v-1.5 16v	98-00	**CR056**	**CR056**				
RX 2							
	71-78		**CR006**				
RX 3							
	72-78		**CR006**				
RX 5							
	78-79	**CR013**	**CR014**				

4

CUSCINETTI RUOTA
WHEEL BEARING
ROLEMENTS ROUE

MERCEDES-BENZ

MODELLO	ANNO	ANT I	ANT E	NOTE	POST I	POST E	NOTE
190 SERIES							
190 -> ch.003512	83->	**CR005**	**CR006**				
190->ch. 002895 ABS	83->	**CR005**	**CR006**				
190D ->ch.000042	83->	**CR005**	**CR006**				
190E->ch.006892	83->	**CR005**	**CR006**				
190E->ch. 005539 ABS	83->	**CR005**	**CR006**				
190 ch003513->	83->	**CR014**	**CR006**				
190 ch 002896-> ABS	83->	**CR014**	**CR006**				
190D ch.000001 ->ABS	83->	**CR014**	**CR006**				
190E ch.006893->	83->	**CR014**	**CR006**				
190E ch.005540->ABS	83->	**CR014**	**CR006**				
190E (2.3-2.6)	86->	**CR014**	**CR006**				
190D (2.5)	86->	**CR014**	**CR006**				
190E(2.3-16/ 2.5-16)	86->	**CR0014**	**CR013**				
200 SERIES							
200-200D	67-76	**CR014**	**CR013**				
200-200D	76-85	**CR022**	**CR024**				
200-200E-200D	85->	**CR014**	**CR013**				
200T-200TE-200TD	86->	**CR014**	**CR013**				
200 T Touring		**CR014**	**CR013**				
200CECabrio Coup,	90-94	**CR014**	**CR013**				
208	95-98	**CR035**					
220 SERIES							
220-220 D	67-76	**CR014**	**CR013**				
220-220 D	76-85	**CR022**	**CR024**				
220E-220TE	93-94	**CR014**	**CR013**				
220CECabrio Coup,	93-94	**CR014**	**CR013**				
230 SERIES							
230/4-230/6-230/8	67-76	**CR014**	**CR013**				
230	76-85	**CR022**	**CR024**				
230E	85->	**CR014**	**CR013**				
230T	76-85	**CR022**	**CR024**				
230 E 230 TE (T124)	86-93		**CR033**				
230 TE Touring		**CR014**	**CR013**				
230 Coup,	87-94	**CR014**	**CR013**				
240 SERIES							
240 D	67-76	**CR014**	**CR013**				
240 D - 240 TD	76-85	**CR022**	**CR024**				

CUSCINETTI RUOTA
WHEEL BEARING
ROLEMENTS ROUE

follows MERCEDES-BENZ

MODELLO	ANNO	ANT I	ANT E	NOTE	POST I	POST E	NOTE
250 SERIES							
250S-250SE-250SL	65-67	**CR014**	**CR013**				
250-250C-250CE	67-76	**CR014**	**CR013**				
250	76-85	**CR022**	**CR024**				
250 D	85->	**CR014**	**CR013**				
250 D	85-93		**CR033**				
250 T	76-85	**CR022**	**CR024**				
250 TD	86->	**CR014**	**CR013**				
260 SERIES							
260 SE	86-92	**CR022**	**CR024**				
260 E	85-93	**CR014**	**CR013**				
260 E (T124, W124)	86-93		**CR033**				
280 SERIES							
280S-280SE-	65-67	**CR014**	**CR013**				
280SEL	67-79	**CR014**	**CR013**				
280 C-280 CE	71->	**CR014**	**CR013**				
280	76-85	**CR022**	**CR024**				
280 C -280 CE CUPE	77-85	**CR022**	**CR024**				
280 E	76-85	**CR022**	**CR024**				
280 S-280SE-280SEL	73-85	**CR022**	**CR024**				
280 TE	76/85	**CR022**	**CR024**				
280 SL-280 SLC	93-95	**CR014**	**CR013**				
280 E	93-95		**CR033**				
300 SERIES							
300 SEB	65-67	**CR014**	**CR013**				
300 SEL (3.5-6.3)	->72	**CR014**	**CR013**				
300D	76-85	**CR022**	**CR025**				
300E-300D-300 SL	85->	**CR014**	**CR013**				
300 SE - 300 SL	86-92	**CR022**	**CR024**				
300 TD	76-85	**CR022**	**CR024**				
300 TD-300 TE	86->	**CR014**	**CR013**				
300 E-24	90-93	**CR014**	**CR013**				
300 CE- 300 CE-24	86-94	**CR014**	**CR013**				
300 CE - CABRIOLET	90-94		**CR033**				
300 SL	89-93		**CR033**				
307 D	78-90	**CR035**					
308 D	90-94	**CR035**					
309 D	83-90	**CR035**					
310 D	89-94	**CR035**					

CUSCINETTI RUOTA
WHEEL BEARING
ROLEMENTS ROUE

follows MERCEDES-BENZ

MODELLO	ANNO	ANT I	ANT E	NOTE	POST I	POST E	NOTE
320 SERIES							
320 E -320 TE	93-94	**CR014**	**CR013**				
320 CE Coup,	93->	**CR014**	**CR013**				
320 E CABRIOLET	93->		**CR033**				
350 SERIES							
350 SL-350 SLC	71->	**CR014**	**CR013**				
350 SE - 350 SEL	75-80	**CR022**	**CR024**				
380 SERIES							
380 SL-380 SLC	80->	**CR014**	**CR013**				
380 SE - 380 SEL	75-80	**CR022**	**CR024**				
380 SEC	82-85	**CR022**	**CR024**				
400 SERIES							
400 E (W124)	93->		**CR033**				
420 SERIES							
420 SL	85->	**CR014**	**CR013**				
420 SEC - 420 SE	86-92	**CR022**	**CR024**				
420 SEL	86-92	**CR022**	**CR024**				
450 SERIES							
450 SL-450 SLC	73-85	**CR014**	**CR013**				
450 SE -450 SEL	73-80	**CR022**	**CR024**				
450 SE -450 SEL	86-92	**CR022**	**CR024**				
500 SERIES							
500 SL-500 SLC	80-85	**CR014**	**CR013**				
500 SL	85-88	**CR014**	**CR013**				
500 SE - 500 SEL	80-92	**CR022**	**CR024**				
500 SEC COUPE	82-92	**CR022**	**CR024**				
500 SEC-500 SE-SEL	86-92	**CR022**	**CR024**				
500 E - 500 SL	89-93		**CR033**				
560 SERIES							
560 SE - 560 SEC COUPE	86-92	**CR022**	**CR024**				
560 SEL	86-92	**CR022**	**CR024**				
600 SERIES							
600 E	89-93		**CR033**				
600 SL (R129)	89-93		**CR033**				

CUSCINETTI RUOTA
WHEEL BEARING
ROLEMENTS ROUE

follows MERCEDES-BENZ

MODELLO	ANNO	ANT I	ANT E	NOTE	POST I	POST E	NOTE
C CLASS							
180 - 200 - 220	93->		**CR033**				
250 - 280	93->		**CR033**				
200 D - 220 D - 250 D	93->		**CR033**				
E CLASS							
200 - 200 D	94->	**CR014**	**CR013**				
200 Cabrio-Coup,	93->	**CR014**	**CR013**				
220	94->	**CR014**	**CR013**				
220 Cabrio-Coup,	93->	**CR014**	**CR013**				
250D-250 TD	94->	**CR014**	**CR013**				
280	94->	**CR014**	**CR013**				
300-300D	93->	**CR014**	**CR013**				
320 Coup,	94->	**CR014**	**CR013**				
420 - 500	94->		**CR033**				
200 - 220	7.95->		**CR033**				
220 D - 250 D - 300 D	7.95->		**CR033**				
320	7.95->		**CR033**				
CLK CLASS							
200 - 320	97-98		**CR033**				
SLK							
200 - 230	96-98		**CR033**				
SPRINTER 414							
	95-98	**CR035**					
MERCEDES VANS							
207D	78-90	**CR022**	**CR024**				
208	78-82	**CR022**	**CR024**				
208 D	90-94	**CR022**	**CR024**				
209 D	83-90	**CR022**	**CR024**				
210	83-94	**CR022**	**CR024**				
210 D	89-94	**CR022**	**CR024**				
307 D	78-90	**CR022**	**CR024**				
307 D	78-90	**CR035**					
308	78-82	**CR022**	**CR024**				
308 D	90->	**CR022**	**CR024**				
308 D	90-94	**CR035**					
309 D	83-90	**CR022**	**CR024**				
309 D	83-94	**CR035**					
310	83->	**CR022**	**CR024**				
310 D	89->	**CR022**	**CR024**				
310 D	89-94	**CR035**					

CUSCINETTI RUOTA
WHEEL BEARING
ROLEMENTS ROUE

MITSUBISHI

MODELLO	ANNO	ANT I	ANT E	NOTE	POST I	POST E	NOTE
CELESTE							
1.6	->79	**CR023**	**CR006**				
2.0	81->	**CR023**	**CR006**				
COLT							
Tipo A 150-151-155-156						**CR006**	
GALANT							
1.6-Combi Autom.	75-83	**CR023**	**CR006**				
1850-2.0	75-77	**CR023**	**CR006**				
1.8 S/ABS	87-91				**CR023**	**CR006**	
2.0 - 2.3 TURBO	81->	**CR014**	**CR013**				
2.0-2.4	85-88				**CR023**	**CR006**	
GALANT SIGMA							
1.6-2.0	77-83	**CR023**	**CR006**				
2.0 BREAKS	78	**CR023**	**CR006**				
2.0 BREAKS	79-83	**CR014**	**CR013**				
GALANT SOPPORO							
1.6 -2.0	79-83	**CR023**	**CR006**				
2.0 TURBO	79-83	**CR014**	**CR013**				
L200							
(4x2)	81-90	**CR022**	**CR024**				
1.6-2.0 (4x2)	86-95	**CR022**	**CR024**				
2.4 (4x2)	86-95	**CR022**	**CR024**				
2.5 (4x2)	86-95	**CR022**	**CR024**				
2.6 (4x2)	86-95	**CR022**	**CR024**				
L300							
4x2	81-90	**CR022**	**CR024**				
1.6-2.0	86-96	**CR022**	**CR024**				
2.4-2.5	86-96	**CR022**	**CR024**				
LANCER							
1.2-1.4-1.6	75-82	**CR023**	**CR006**				
2.0 TURBO	80-82	**CR014**	**CR013**				
1.2-1.4-1.4 TURBO	82-84				**CR023**	**CR006**	
BREAKS	86-91				**CR023**	**CR006**	

CUSCINETTI RUOTA
WHEEL BEARING
ROLEMENTS ROUE

follows MITSUBISHI

MODELLO	ANNO	ANT I	ANT E	NOTE	POST I	POST E	NOTE
SAPPORO							
1.6	81->		**CR006**				
2.0		**CR014**	**CR013**				
SPACE WAGON							
D04-D05-D09	83-90	**CR023**	**CR006**				
4WD (D08)	85-90	**CR023**	**CR006**				
STARION							
2.0	82-90	**CR013**	**CR014**				

NISSAN

200							
SX	83-84	**CR014**	**CR013**				
300							
ZX	83-96	**CR014**	**CR013**				
ATLAS CABSTAR							
F22	82-89	**CR022**	**CR024**				
BLUEBIRD							
160B-180B	71-73	**CR023**	**CR006**				
160B-180B	73-76	**CR014**	**CR013**				
160B-180B-200B	76-83	**CR014**	**CR013**				
C20							
C120	79-82	**CR014**	**CR013**				

CUSCINETTI RUOTA
WHEEL BEARING
ROLEMENTS ROUE

follows NISSAN

MODELLO	ANNO	ANT I	ANT E	NOTE	POST I	POST E	NOTE
C21							
C120 D	79-82	**CR014**	**CR013**				
FAIRLADY							
280 ZX	79-84	**CR014**	**CR013**				
L35							
					CR051	**CR051**	
L45							
					CR051	**CR051**	
LAUREL							
	76-85	**CR014**	**CR013**				
LIBERTA							
T12	83-89				**CR005**	**CR013**	
MARCH							
	83-89				**CR023**	**CR013**	
MICRA							
	83-89				**CR023**	**CR013**	
PRAIRIE							
	83-86				**CR005**	**CR013**	
PULSAR							
1.0-1.3	82-85				**CR005**	**CR013**	
1.5-1.7D	82-85				**CR005**	**CR013**	
B12 - N13 (16V)	86-89		**CR052**				
4WD N13	86-89		**CR052**				

CUSCINETTI RUOTA
WHEEL BEARING
ROLEMENTS ROUE

follows NISSAN

MODELLO	ANNO	ANT I	ANT E	NOTE	POST I	POST E	NOTE
SENTRA							
4WD B12	86-90		**CR052**				
SILVIA							
180 SX	80-83	**CR014**	**CR013**				
	83-86	**CR014**	**CR013**				
SUNNY							
120Y-140Y-160Y	75-81	**CR023**	**CR006**				
B12 - N13 - B12 16v - N13 16v	86-89		**CR052**				
4WD B12 - 4WD N13	86-90		**CR052**				
VIOLET							
140 J -160 J	73-75	**CR023**	**CR006**				
140 J -160 J	75-78	**CR014**	**CR013**				
160 J	73-75	**CR023**	**CR006**				
140 J -160 J - 160 JSSS	75-81	**CR014**	**CR013**				
140 J - 160 J FRENI DISCO	79-81	**CR023**	**CR006**				
URVAN							
E21-E23	82-87	**CR022**	**CR024**				
E24	87->	**CR022**	**CR024**				
VANETTE							
MOT LD 20	80->	**CR014**	**CR013**				

NSU

110							
110S-110SC			**CR006**				
1200							
1200-1200C			**CR006**				

4

CUSCINETTI RUOTA
WHEEL BEARING
ROLEMENTS ROUE

OPEL

MODELLO	ANNO	ANT I	ANT E	NOTE	POST I	POST E	NOTE
ADMIRAL							
	69-77	**CR014**	**CR013**				
ASCONA							
1.2-1.6	->75	**CR023**	**CR006**				
1.6S-1.9-Voyage	->75	**CR023**	**CR006**				
B 1.2-1.6	75	**CR005**	**CR006**				
B 1.6S-1.9	75->	**CR005**	**CR006**				
B 2.0 S,E,GTE	75->	**CR005**	**CR006**				
C 1.3	81-88	**CR008**		Singolo	**CR005**	**CR006**	
C 1.6-1.8	82-88	**CR012**		Singolo	**CR005**	**CR006**	
ASTRA							
1.4i-1.6	91-93	**CR008**		Singolo			
1.4-1.6	92-98	**CR021**		Singolo			
1.4i-1.6i	93->	**CR012**		Singolo			
1.8i-2.0i 16v	92->	**CR012**		Singolo			
1.7 D-1.7 TD	91->	**CR012**		Singolo			
Cabrio 1.4-1.6	93->	**CR008**		Singolo			
Cabrio 1.4-1.6	94->	**CR012**		Singolo			
Cabrio 1.8-2.0	93->	**CR012**		Singolo			Classic
	99->	**CR021**		Singolo			
CALIBRA							
2.0	89->	**CR012**		Singolo			
4x4	90->	**CR012**		Singolo			
CHEVETTE							
	75-76	**CR023**					
COMMODORE							
A	67-72	**CR014**	**CR013**				
B	72-77	**CR014**	**CR013**				
C	78->	**CR014**	**CR013**				
CORSA							
1.0-1.2-1.3	83->	**CR008**		Singolo	**CR005**	**CR006**	
1.2i-1.4i-1.5D	90->	**CR008**		Singolo	**CR005**	**CR006**	
1.6i	90->	**CR012**		Singolo	**CR005**	**CR006**	
B	93->	**CR021**		Singolo	**CR005**	**CR006**	
B	94->	**CR021**		Singolo	**CR014**	**CR013**	
C	00->				**CR054**		Singolo

CUSCINETTI RUOTA
WHEEL BEARING
ROLEMENTS ROUE

follows OPEL

MODELLO	ANNO	ANT I	ANT E	NOTE	POST I	POST E	NOTE
DIPLOMAT							
V8	64-77	**CR014**	**CR013**				
KADET							
B-C	->75	**CR023**	**CR006**				
C (Freni a Disco)	75	**CR005**	**CR006**				
C (1.0-1.2-1.6-1.9-2.0)	76-79	**CR005**	**CR006**				
D-E (1.2-1.3)	80->	**CR008**		Singolo	**CR005**	**CR006**	
D-E (1.6-1.8)	82->	**CR012**		Singolo	**CR005**	**CR006**	
CABRIOLET 1.4-1.6	85-92	**CR008**		Singolo	**CR005**	**CR006**	
CABRIOLET 1.6S-2.0	85-92	**CR012**		Singolo	**CR005**	**CR006**	
COMBO	86-91	**CR012**		Singolo	**CR014**	**CR013**	
KAPITAN							
	64-70	**CR014**	**CR013**				
MANTA							
1.2-1.6	->75	**CR023**	**CR006**				
1.6S-1.9	->75	**CR023**	**CR006**				
B 1.2-1.6	75	**CR005**	**CR006**				
B 1.6S-1.9	75->	**CR005**	**CR006**				
B 2.0 S,E,GTE	75->	**CR005**	**CR006**				
MONZA							
	78-87	**CR014**	**CR013**				
OLYMPIA							
A	68-70	**CR023**	**CR006**				
OMEGA							
	86->				**CR012**		Singolo
REKORD							
B-C	66->	**CR023**	**CR006**				
D	72->	**CR005**	**CR006**				
E	78-86	**CR005**	**CR006**				
E (Berlina e Diesel)	78-86	**CR014**	**CR013**				

4

CUSCINETTI RUOTA
WHEEL BEARING
ROLEMENTS ROUE

follows OPEL

MODELLO	ANNO	ANT I	ANT E	NOTE	POST I	POST E	NOTE
SENATOR							
A	78-87	**CR014**	**CR013**				
TIGRA							
	94->	**CR021**		Singolo	**CR005**	**CR006**	
VECTRA							
1.4-1.6	89-93		**CR008**		**CR005**	**CR006**	
1.6i-1.8i-2.0i-1.7TD	90->	**CR012**		Singolo	**CR005**	**CR006**	
2.0i - 2.0 Turbo 4x4	90->	**CR012**		Singolo			
A 1.6	94->	**CR021**		Singolo	**CR005**	**CR006**	

PEUGEOT / TALBOT / SIMCA

104							
	72-80				**CR048**		
	80-88				**CR048**	**CR028**	
106							
1.0-1.1 (Con 3 Fori di Montaggio)	91-99	**CR018**		Singolo	**CR042**		Singolo
1.0-1.1-1.4	91->	**CR018**		Singolo	**CR025**		Singolo
1.3	94->	**CR018**		Singolo	**CR025**		Singolo
1.4 D	92-94				**CR025**		Singolo
1.5 D	94->				**CR025**		Singolo
1.6	94->	**CR018**		Singolo			
1.6	95->	**CR018**		Singolo	**CR025**		Singolo
1.5 D	96->	**CR062**		Singolo			
204							
All models	65-76	**CR037**		Singolo			
Diesel	68-76	**CR037**		Singolo			

CUSCINETTI RUOTA
WHEEL BEARING
ROLEMENTS ROUE

follows PEUGEOT / TALBOT / SIMCA

MODELLO	ANNO	ANT I	ANT E	NOTE	POST I	POST E	NOTE
205							
1.0-1.1-1.2	83->	**CR018**		Singolo	**CR025**		Singolo
1.1-1.3	88->	**CR018**		Singolo	**CR025**		Singolo
1.6 S/ABS	85->	**CR018**		Singolo	**CR025**		Singolo
1.6 C/ABS	85->	**CR040**		Singolo			
GENTRY 1.9 S/ABS	91->	**CR018**		Singolo	**CR025**		Singolo
GENTRY 1.9 C/ABS	91->	**CR040**		Singolo			
GTI S/ABS -C/ABS	87->	**CR040**		Singolo			
1.7 D - 1.9 D S/ABS	85->	**CR018**		Singolo	**CR025**		Singolo
1.7 D - 1.9 D C/ABS	85->	**CR040**		Singolo	**CR025**		Singolo
206							
1.1 - 1.4 - 1.6	98->				**CR025**		Singolo
1.9 D	98->				**CR025**		Singolo
1.9 TD	98->	**CR040**		Singolo			
2.0 16v	98->	**CR040**		Singolo			
206 (2A/C)							
1.6 i	98-00	**CR062**		Singolo			
1.9 D	98-01	**CR062**		Singolo			
206 SW (2E/K)							
1.1 - 1.4	02->	**CR062**		Singolo			
1.4 16V	03->	**CR062**		Singolo			
304							
All models	69-80	**CR037**		Singolo			
305							
	78-82	**CR037**		Singolo			
	84->	**CR040**		Singolo			
306							
1.4 S/ABS	93->	**CR018**		Singolo	**CR025**		Singolo
1.4-1.6-1.8-2.0	93->	**CR040**		Singolo	**CR025**		Singolo
Diesel-Turbo Diesel	93->	**CR040**		Singolo	**CR025**		Singolo
1.4 ENTREPRISE	95->	**CR018**		Singolo	**CR025**		Singolo
1.6-1.8 ENTREPRISE	93-95	**CR040**		Singolo			
1.6-1.8 ENTREPRISE	95->	**CR040**		Singolo	**CR025**		Singolo
1,1	94->	**CR062**		Singolo			
1,6	00->	**CR062**		Singolo			
2,0	97->	**CR062**		Singolo			

CUSCINETTI RUOTA
WHEEL BEARING
ROLEMENTS ROUE

follows PEUGEOT / TALBOT / SIMCA

MODELLO	ANNO	ANT I	ANT E	NOTE	POST I	POST E	NOTE
306 2 VOLUMI							
1,1 - 1,4	93->		**CR062**	Singolo			
1,6	93-00		**CR062**	Singolo			
1,8	93->		**CR062**	Singolo			
306 BREAK							
1,4	97->		**CR062**	Singolo			
1,6 - 1,8 - 2,0	97->		**CR062**	Singolo			
306 CABRIOLET							
1,6	96-00		**CR062**	Singolo			
1,8 - 2,0	94->		**CR062**	Singolo			
309							
1.1-1.3-1.4-1.5-1.8	86->		**CR040**	Singolo		**CR025**	Singolo
GT-GTI-Diesel-TD	87->		**CR040**	Singolo		**CR025**	Singolo
405							
XR-XS-GR-SX	87-92		**CR040**	Singolo			
4x4	89->		**CR040**	Singolo		**CR040**	Singolo
406							
	95->		**CR040**	Singolo			
504							
	76-85		**CR048**				
CAMIONETTE	80-90		**CR048**				
505							
Berlina-Familare-Break	79-92		**CR048**				
604							
	75-87		**CR048**				

4

CUSCINETTI RUOTA
WHEEL BEARING
ROLEMENTS ROUE

follows PEUGEOT / TALBOT / SIMCA

MODELLO	ANNO	ANT I	ANT E	NOTE	POST I	POST E	NOTE
806 (221)							
1,8 - 1,9 TD	95-02	**CR063**		Singolo			
2,0	94-02	**CR063**		Singolo			
2,0 16V	98-02	**CR063**		Singolo			
2,0 Hdi	99-02	**CR063**		Singolo			
2,0 Turbo	94-02	**CR063**		Singolo			
2,1 TD 12V	96-99	**CR063**		Singolo			
1.100 TALBOT							
All models	68-78	**CR037**		Singolo			
1307 TALBOT							
(1508)	76-78	**CR037**		Singolo			
1308 TALBOT							
(1508)	76-78	**CR037**		Singolo			
BOXER							
1000/1400 4x2	94-99	**CR051**	**CR051**		**CR049**	**CR050**	
1000/1400 4x4	96-99	**CR051**	**CR051**		**CR051**	**CR051**	
CHRYSLER							
160-180		**CR014**	**CR013**				
2.0		**CR014**	**CR013**				
EXPERT (224)							
1,6 - 1,9 D - 1,9 TD	96->	**CR063**		Singolo			
2,0 - 2,0 Hdi	00->	**CR063**		Singolo			
EXPERT furgonato (222)							
1,6 - 1,9 D - 1,9 TD	96->	**CR063**		Singolo			
2,0 Hdi	00->	**CR063**		Singolo			
EXPERT pianale piatto (223)							
1,6 - 1,9 D - 1,9 TD	96->	**CR063**		Singolo			
HORIZONT							
	78-86				**CR023**		

CUSCINETTI RUOTA
WHEEL BEARING
ROLEMENTS ROUE

follows PEUGEOT / TALBOT / SIMCA

MODELLO	ANNO	ANT I	ANT E	NOTE	POST I	POST E	NOTE
J5							
1000/1300/1400	82-92	**CR051**	**CR051**		**CR049**	**CR050**	
1800 Kg	89-92	**CR051**	**CR051**				
4x4	86-92	**CR051**	**CR051**				
MATRA							
RANCHO	77-84	**CR037**		Singolo	**CR023**		
PARTNER							
1.1-1.4-1.6 D TD-1.9 D TD	96->		**CR040**				
SAMBA							
	82-86				**CR048**	**CR028**	
SOLARA							
	81-86				**CR023**		
SIMCA							
150-180	71-81	**CR014**	**CR013**				
900	65-78	**CR023**			**CR023**	**CR023**	
900 S	73-75	**CR023**			**CR023**	**CR023**	
1.0	68-78	**CR023**	**CR006**		**CR023**	**CR023**	
1.0	68-70	**CR023**	**CR006**		**CR023**	**CR023**	
1.0	70-79	**CR023**	**CR006**		**CR023**	**CR023**	
1.0 GLS - LS - RALLY	73-77	**CR023**			**CR023**	**CR023**	
1.0 GLS 6 CV	77->	**CR023**			**CR023**	**CR023**	
1.1	68-78		**CR037**			**CR023**	
1.2 GL-GLE-GLS	73-79		**CR037**			**CR023**	
1.2 COUPE'	68-71	**CR023**	**CR006**		**CR023**	**CR023**	
1.3	63-76		**CR023**				
1.3	75-78		**CR037**			**CR023**	
1.5	63-76		**CR023**				
1.6	78-80	**CR013**	**CR014**				
ALPINE	80-84				**CR023**		
BAGHEERA MATRA	78-80				**CR023**		
HORIZON	78-86				**CR023**		
MATRA	77-84				**CR023**		
MATRA RANCHO	77-88		**CR037**			**CR023**	
MINX	85-86				**CR023**		
SAMBA	81-86					**CR028**	
SOLARA	81-86				**CR023**		
SUMBEAM							
			CR013				
TANGORA							
	81-83		**CR048**				

CUSCINETTI RUOTA
WHEEL BEARING
ROLEMENTS ROUE

PORSCHE

MODELLO	ANNO	ANT I	ANT E	NOTE	POST I	POST E	NOTE
356							
	63-65	**CR014**	**CR013**				
904							
SPORT CARRERA	64-65	**CR014**	**CR013**				
906							
SPORT CARRERA	65-67	**CR014**	**CR013**				
911							
911E-911S	72->	**CR014**	**CR013**				
911T-911SC	72->	**CR014**	**CR013**				
912							
	65-69	**CR014**	**CR013**				
914/4							
1.6-2.0	->73	**CR014**	**CR013**		**CR004**		Singolo
1.6-2.0	73->	**CR014**	**CR013**				
914/6							
1.6-2.0	->73	**CR014**	**CR013**		**CR004**		Singolo
1.6-2.0	73->	**CR014**	**CR013**				
924							
	76->	**CR005**	**CR006**				
Turbo	76->	**CR005**	**CR006**				
Turbo	80-85	**CR014**	**CR013**				
CARRERA GT	80-85	**CR014**	**CR013**				
944							
		CR005	**CR006**				
CARRERA 2							
		CR004	**CR004**				

4

CUSCINETTI RUOTA
WHEEL BEARING
ROLEMENTS ROUE

POLSKI

MODELLO	ANNO	ANT I	ANT E	NOTE	POST I	POST E	NOTE
125							
P	68-73	**CR014**	**CR013**				
P	74->	**CR014**	**CR013**		**CR044**		Singolo
126 BIS							
	88-90	**CR046**	**CR045**		**CR047**	**CR047**	
FSO POLONEZ							
	79->	**CR014**	**CR013**		**CR044**		Singolo

RENAULT

CLIO							
RL-RN-RT 1.2-1.4-1.8	90->	**CR030**		Singolo	**CR025**		Singolo
1.2-14-1.9D	94->		**CR016**		**CR025**		Singolo
1.7 Diesel	90->	**CR016**		Singolo			
16v	91->	**CR016**		Singolo			
WILLIAMS 2.0	94->		**CR016**				
ESPACE							
	84->	**CR031**		Singolo			
V6	84-96	**CR031**		Singolo			
4x4	87-91	**CR031**		Singolo		**CR016**	
EXPRESS							
Petrol	86->	**CR030**		Singolo			
Diesel	86-86	**CR030**		Singolo	**CR026**		Singolo
Diesel	91->	**CR030**		Singolo			
425 Kg.- 525 Kg.	86-90	**CR030**		Singolo	**CR026**		Singolo
575 Kg.	86-90	**CR030**		Singolo	**CR038**		Singolo
775 Kg.- 775 Kg. Diesel	91->	**CR016**		Singolo			

CUSCINETTI RUOTA
WHEEL BEARING
ROLEMENTS ROUE

follows RENAULT

MODELLO	ANNO	ANT I	ANT E	NOTE	POST I	POST E	NOTE
FUEGO							
	80-86	**CR031**		Singolo			
TL-GTL	80-85	**CR031**		Singolo	**CR048**	**CR028**	
KANGOO							
	97-99	**CR016**		Singolo	**CR038**		Singolo
LAGUNA							
1.6-1.8-2.0	93-99	**CR016**		Singolo	**CR038**		Singolo
1.9 Diesel	93-99				**CR038**		Singolo
MEGANE							
	95->	**CR016**		Singolo	**CR025**		Singolo
CLASSIC	95->	**CR016**		Singolo	**CR025**		Singolo
COUPE	95->	**CR016**		Singolo	**CR025**		Singolo
BREAK 1.4-1.6-1.9D	96->	**CR016**		Singolo			
R 4							
ESPANA	77->				**CR048**	**CR028**	
TL	76-86				**CR048**	**CR028**	
R 5							
ESPANA	77-84					**CR028**	
ALPINE TURBO	82-84	**CR027**	**CR027**			**CR028**	
R1220	77-84				**CR048**	**CR028**	
R1221-R1222	77-84					**CR028**	
R1223 ALPINE	78-81	**CR027**	**CR027**		**CR048**	**CR028**	
R1224-R1225-R1227	72-84				**CR048**	**CR028**	
L-LS-GTL-TL	80-84				**CR048**	**CR028**	
SOCIETE	80-84				**CR048**	**CR028**	
SUPER	84->		**CR030**		**CR025**		Singolo
SUPER D	84->				**CR025**		Singolo
SUPER GT TURBO-GTE	85->		**CR030**				
R 6							
	76-79				**CR048**	**CR028**	
R 7							
ESPANA	77-79					**CR028**	
TL-GTL	76-78					**CR028**	

4

CUSCINETTI RUOTA
WHEEL BEARING
ROLEMENTS ROUE

follows RENAULT

MODELLO	ANNO	ANT I	ANT E	NOTE	POST I	POST E	NOTE
R 9							
	81->	**CR030**		Singolo	**CR025**		Singolo
Diesel	81->	**CR030**		Singolo	**CR025**		Singolo
TURBO	85->	**CR030**		Singolo	**CR025**		Singolo
R 11							
	83->	**CR030**		Singolo	**CR025**		Singolo
Diesel	83->	**CR030**		Singolo	**CR025**		Singolo
TURBO	84->	**CR030**		Singolo	**CR025**		Singolo
R 12							
L-TL-TR-TS	77-80	**CR027**	**CR027**		**CR048**	**CR028**	
R 14							
	76-83				**CR048**	**CR028**	
R 15							
	77-79	**CR027**	**CR027**		**CR048**	**CR028**	
R 16							
	76-80				**CR048**	**CR028**	
R 17							
	77-80	**CR027**	**CR027**				
R 18							
R1341 TS GTS	78-83	**CR027**	**CR027**		**CR048**	**CR028**	
L-TL-GTL-TS-GTS	81->	**CR031**		Singolo			
R1340 L-TL-GTL	81-83	**CR027**	**CR027**		**CR048**	**CR028**	
R1340 L-TL-GTL	84-86		**CR031**		**CR048**	**CR028**	
R1341 TS GTS	84-86		**CR031**		**CR048**	**CR028**	
TX-GTX-Turbo E	81->	**CR031**		Singolo			
Diesel-Turbo D.	83->	**CR031**		Singolo			
TD-GTD	81-86		**CR031**		**CR048**	**CR028**	
TS -GTL	78-82	**CR027**	**CR027**				
TS-GTL 4x4	83-86		**CR031**				
SOCIETE	78-82	**CR027**	**CR027**				

CUSCINETTI RUOTA
WHEEL BEARING
ROLEMENTS ROUE

follows RENAULT

MODELLO	ANNO	ANT I	ANT E	NOTE	POST I	POST E	NOTE
R 19							
TR-TRE-GTR	89->	**CR030**	**CR030**				
TSE-GTS-GTE	89->	**CR016**		Singolo	**CR025**		Singolo
GTX-TXE-TXI	89->	**CR016**		Singolo	**CR025**		Singolo
TD-TDE-GTD	89->	**CR016**		Singolo	**CR025**		Singolo
	94->		**CR016**		**CR025**		Singolo
CHAMADE	89->		**CR016**		**CR025**		Singolo
R 20							
L-TL-GTL-LS-TS	80->	**CR031**		Singolo			
TD-GTD	81->	**CR031**		Singolo			
L-TL-GTL-GTD-AUT	77-83	**CR027**	**CR027**				
LS-TS-AUT	78-84	**CR029**		Singolo			
TX-AUT	81-84	**CR029**		Singolo			
R 21							
GTL-GTS-TL-TS	86->	**CR016**		Singolo	**CR026**		Singolo
TSE-RS-GTS-GTX	86->	**CR016**		Singolo	**CR026**		Singolo
NEVADA GTS-TL	86->	**CR016**		Singolo			
NEVADA GTX-TX	86->	**CR016**		Singolo			
GSD	86->				**CR026**		Singolo
TXE-TXI-GTD-TD	86->	**CR031**		Singolo	**CR026**		Singolo
TBD-TDX	86->	**CR031**		Singolo			
2.0 Turbo	86->	**CR031**		Singolo			
NEVADATBD-GTD	86->	**CR031**		Singolo			
NEVADA TD-TDX	86->	**CR031**		Singolo			
NEVADA TL-TS-TSE	86->		**CR016**				
R 25							
	84-92	**CR031**		Singolo			
R 30							
TS-TX	76-84	**CR029**		Singolo			
Turbo Diesel	82-84	**CR031**		Singolo			
SUPER 5							
	85->	**CR030**		Singolo	**CR025**		Singolo
GT Turbo	85-91	**CR030**		Singolo			
Diesel	85->	**CR030**		Singolo			
TWINGO							
1.1 - 1.2	93->	**CR030**		Singolo	**CR025**		Singolo
TRAFIC							
T1-T3-T4-T5-T6-T9-TA	84-86	**CR029**		Singolo		**CR048**	
All models	81-91	**CR029**		Singolo			

CUSCINETTI RUOTA
WHEEL BEARING
ROLEMENTS ROUE

ROVER

MODELLO	ANNO	ANT I	ANT E	NOTE	POST I	POST E	NOTE
ALLEGRO							
	73-83				**CR023**	**CR006**	
ITAL							
	81-84	**CR023**	**CR006**				
MARINA							
	71-80	**CR023**	**CR006**				
VAN	71-81	**CR023**	**CR006**				
M.G.							
		CR014	**CR013**				
ROVER							
2000	63-73	**CR014**	**CR013**				
2200	74-76	**CR014**	**CR013**				
2300	77-86	**CR014**	**CR013**				
2600	77-86	**CR014**	**CR013**				
3500	68-75	**CR014**	**CR013**				
3500 S	68-75	**CR014**	**CR013**				
3500	76-86	**CR014**	**CR013**				
VANDEN PLAS							
1.5	75-81				**CR023**	**CR006**	

CUSCINETTI RUOTA
WHEEL BEARING
ROLEMENTS ROUE

SAAB							
MODELLO	ANNO	ANT I	ANT E	NOTE	POST I	POST E	NOTE
90							
	85-87		**CR004**				
99							
	80-84	**CR004**		Singolo			
600							
	80-87		**CR002**				
900							
	80-87	**CR004**		Singolo			
	87->	**CR004**		Singolo			
16v Cabrio		**CR004**		Singolo			

SEAT							
124							
	68-80	**CR020**	**CR013**		**CR003**		Singolo
Diesel	68-80	**CR020**	**CR013**		**CR003**		Singolo
127/FURA							
	76-85	**CR001**		Singolo			
128							
	76-80	**CR001**		Singolo			
131							
	75-84	**CR010**	**CR013**		**CR003**		Singolo
132							
	72-82	**CR014**	**CR013**		**CR003**		Singolo

4

CUSCINETTI RUOTA
WHEEL BEARING
ROLEMENTS ROUE

follows SEAT

MODELLO	ANNO	ANT I	ANT E	NOTE	POST I	POST E	NOTE
133							
	74-81	**CR046**	**CR045**				
1430							
	70-74	**CR020**	**CR013**			**CR003**	
CORDOBA							
	93->	**CR009**		Singolo	**CR005**	**CR006**	
IBIZA							
	84->	**CR002**		Singolo			
Diesel	84->	**CR002**		Singolo			
900-1.2-Diesel	91->	**CR002**		Singolo			
	93->	**CR009**		Singolo	**CR005**	**CR006**	
IBIZA I							
1.2 / 1.2 i	84-93	**CR002**		Singolo			
1.5 / 1.5 i / 1.5 i Cat.	84-93	**CR002**		Singolo			
1.7 D	84-93	**CR002**		Singolo			
INCA							
	95->		**CR009**		**CR005**	**CR013**	
MALAGA							
1.2 / 1.2 i	84->	**CR002**		Singolo			
Diesel	84->	**CR002**		Singolo			
RONDA							
1.2/ 1.4 / 1.5 / 1.6	82->	**CR002**		Singolo			
Diesel	82->	**CR002**		Singolo			
SPORT							
1.2-1.4	75-79		**CR001**				
TOLEDO							
1.6-1.8-1.8 16v-2.0	91->	**CR009**		Singolo	**CR005**	**CR006**	
1.9 Diesel-Turbo Ds	94->	**CR009**		Singolo	**CR005**	**CR006**	
2.0 16v	94->	**CR009**		Singolo	**CR005**	**CR006**	

CUSCINETTI RUOTA
WHEEL BEARING
ROLEMENTS ROUE

MODELLO	ANNO	ANT I	ANT E	NOTE	POST I	POST E	NOTE
SKODA							
FAVORIT							
115-135-136	88-92	**CR002**		Singolo	**CR014**		
1.3	93->	**CR002**		Singolo	**CR005**	**CR006**	
FELICIA							
	94->				**CR005**	**CR006**	
FORMAN							
1.3	91-92	**CR002**		Singolo	**CR014**		
1.3	92->	**CR002**		Singolo	**CR005**	**CR006**	
PICK-UP							
	95-				**CR005**	**CR006**	
TOYOTA							
ARAYA							
			CR059				
BABY CAMRRY							
			CR059				
CARINA							
1.6	71-74	**CR023**	**CR006**				
1.6	74-81	**CR005**	**CR006**				
1.6	77-81	**CR014**	**CR013**				
1.8	77-81	**CR014**	**CR013**				
2.0	79-81	**CR005**	**CR006**				
1.5-1.6	81-85	**CR005**	**CR006**				
1.6-1.8-2.0	83-85	**CR014**	**CR013**				
1.6 E - 1.8 E - 2.0 E	92-97		**CR053**				
CELICA							
1.6	71-74	**CR013**	**CR006**				
1.6	74-81	**CR005**	**CR006**				
1.6	77-81	**CR014**	**CR013**				
1.6	81-85	**CR005**	**CR006**				
1-8 - 2.0 - 2.8	81-85	**CR014**	**CR013**				
AT150 - ST182 (C/ABS)	89-93		**CR053**				

CUSCINETTI RUOTA
WHEEL BEARING
ROLEMENTS ROUE

follows TOYOTA

MODELLO	ANNO	ANT I	ANT E	NOTE	POST I	POST E	NOTE
COROLLA							
1.1-1.2	67-74	**CR023**	**CR006**				
1.2	74-79	**CR005**	**CR006**				
1.4	70-74	**CR023**	**CR006**				
1.4-1.6	74-79	**CR005**	**CR006**				
1.3 - 1.6 - 1.8	80-83	**CR005**	**CR006** **CR059**				
CORONA							
1.6	68-70	**CR023**	**CR006**				
1.6	73-78	**CR014**	**CR013**				
1.7	70-73	**CR023**	**CR006**				
1.8	73-75	**CR014**	**CR013**				
1.9	70-73	**CR023**	**CR006**				
2.0	72-74	**CR005**	**CR006**				
2.0-2.3	72-74	**CR014**	**CR013**				
CRESSIDA							
2.0	77-84	**CR014**	**CR013**				
HIACE							
1.6-1.8-2.0	77-89	**CR024**	**CR022**				
2.4	89-90	**CR024**	**CR022**				
HILUX							
2WD	78-90	**CR024**	**CR022**				
LITEACE							
	79-85	**CR014**	**CR013**				
RAV4							
2.0 (C/ABS)	95->		**CR053**				
STARLET							
	78-84	**CR023**	**CR006**				

CUSCINETTI RUOTA
WHEEL BEARING
ROLEMENTS ROUE

VAUXHALL

MODELLO	ANNO	ANT I	ANT E	NOTE	POST I	POST E	NOTE
SEE OPEL							

VOLKSWAGEN

MODELLO	ANNO	ANT I	ANT E	NOTE	POST I	POST E	NOTE
181							
SAFARI		**CR005**	**CR006**		**CR005**	**CR006**	
411-412							
		CR005	**CR006**				
CADDY							
1.5-1.6	83-92	**CR008**		Singolo	**CR005**	**CR013**	
	95-97	**CR009**		Singolo	**CR005**	**CR013**	
	97-99	**CR009**		Singolo			
PICKUP	97-99				**CR013**	**CR005**	
CORRADO							
1-8-2.0-2.9 VR6	89->	**CR009**		Singolo	**CR005**	**CR006**	
Magnum	91->	**CR009**		Singolo	**CR005**	**CR006**	
DERBY							
	77-85	**CR019**		Singolo	**CR005**	**CR006**	
GOLF							
1.1-1.3-1.6-1.8	74-83	**CR008**		Singolo	**CR005**	**CR006**	
Cabrio	74-93	**CR008**		Singolo	**CR005**	**CR006**	
1.1-1.3-1.6-1.8	83-87	**CR015**		Singolo	**CR005**	**CR006**	
1.3-1.6-1.8	87->	**CR009**		Singolo			
A3	91->	**CR009**		Singolo	**CR005**	**CR006**	
A3 16v-VR6	91->				**CR005**	**CR006**	
Syncro	85->	**CR015**		Singolo	**CR007**	**CR007**	
GTI	91->	**CR009**		Singolo	**CR005**	**CR006**	
1.4-1.6-1.8-1.9	92->	**CR009**		Singolo	**CR005**	**CR006**	
Cabrio	93->	**CR009**		Singolo	**CR005**	**CR006**	
2.0-2.8	92->	**CR009**		Singolo	**CR005**	**CR006**	
VARIANT	92->		**CR009**		**CR005**	**CR006**	

CUSCINETTI RUOTA
WHEEL BEARING
ROLEMENTS ROUE

follows VOLKSWAGEN

MODELLO	ANNO	ANT I	ANT E	NOTE	POST I	POST E	NOTE
JETTA							
	80-83		**CR008**	Singolo	**CR005**	**CR006**	
	83-87		**CR015**	Singolo	**CR005**	**CR006**	
	87->		**CR009**	Singolo			
Syncro	85->		**CR015**	Singolo	**CR007**	**CR007**	
Syncro	88->		**CR009**			**CR007**	
K 70							
	->73		**CR001**	Singolo		**CR001**	Singolo
	73->		**CR001**	Singolo	**CR005**	**CR006**	
LT							
LT40-LT40D	79-82		**CR005**				
LT45-LT45D	79-82		**CR005**				
LT50-LT50D	79-82		**CR005**				
LT28-LT28D	83->		**CR005**				
LT31-LT31D	83->		**CR005**				
LT31-LT31D	91-96		**CR005**		**CR051**	**CR051**	
LT35-LT35D	83->		**CR005**				
LT40-LT40D	79-82		**CR005**		**CR051**	**CR051**	
LT40-LT40D	83->		**CR005**				
LT45-LT45D	79-82		**CR005**		**CR051**	**CR051**	
LT45-LT45D	83->		**CR005**				
LT50-LT50D	83->		**CR005**				
LT28-LT35-LT46	97-99	**CR035**					
MINIBUS							
(RWD)	84-92		**CR033**				
MAGGIOLINO							
->ch.118857239	66-88	**CR023**	**CR006**				
ch. 118857240->	68-74	**CR005**	**CR006**				
1.3	65-68	**CR023**	**CR006**				
1.3	68-74	**CR005**	**CR006**				
1.5 TIPO 3	62-65	**CR023**	**CR006**				
1.6	66-68	**CR023**	**CR006**				
1.5-1.6	68->	**CR005**	**CR006**				
1.2	78->	**CR005**	**CR006**				

CUSCINETTI RUOTA
WHEEL BEARING
ROLEMENTS ROUE

follows VOLKSWAGEN

MODELLO	ANNO	ANT I	ANT E	NOTE	POST I	POST E	NOTE
PASSAT							
	74-88	**CR007**		Singolo	**CR005**	**CR006**	
Syncro	84->	**CR007**		Singolo	**CR007**		Singolo
	88->	**CR009**		Singolo			
POLO							
	75->	**CR019**		Singolo	**CR005**	**CR006**	
	94->		**CR015**		**CR005**	**CR006**	
CLASSIC	96->		**CR009**		**CR005**	**CR006**	
SANTANA							
	74-88	**CR007**		Singolo	**CR005**	**CR006**	
SCIROCCO							
	74->	**CR008**		Singolo	**CR005**	**CR006**	
TARO							
4x2	89->	**CR022**	**CR024**				
TRANSPORTER							
	63-67	**CR014**	**CR013**				
	67-70	**CR014**	**CR013**				
1.2 t.	67-70		**CR013**				
	70-80	**CR014**	**CR013**				
1.2 t.	70-80		**CR013**				
	80->		**CR013**				
BUS	68-79	**CR014**	**CR013**				
BUS	80-84		**CR013**				
BUS	84-90		**CR033**				
MINIBUS	80-94		**CR013**				
VENTO							
1.4-1.6-1.8-1.9-2.0	92->	**CR009**		Singolo	**CR005**	**CR006**	
2.0 GT-2.8	92->	**CR009**		Singolo	**CR005**	**CR006**	

4

CUSCINETTI RUOTA
WHEEL BEARING
ROLEMENTS ROUE

VOLVO

MODELLO	ANNO	ANT I	ANT E	NOTE	POST I	POST E	NOTE
DAF							
66	72-80	**CR023**	**CR006**				
142							
	67-74	**CR014**	**CR013**				
144							
	66-74	**CR014**	**CR013**				
145							
	68-74	**CR014**	**CR013**				
240							
	75-80 81-93	**CR013**	**CR014** **CR034**				
242							
	75-80	**CR014**	**CR013**				
244							
	75-80	**CR014**	**CR013**				
245							
T AMBULANCE	75-80 77-80 77-80	**CR014**	**CR013** **CR034** **CR034**				
260							
	81-85		**CR034**				
264							
TE	75-80 77-80	**CR014**	**CR013** **CR034**				

4

CUSCINETTI RUOTA
WHEEL BEARING
ROLEMENTS ROUE

follows VOLVO

MODELLO	ANNO	ANT I	ANT E	NOTE	POST I	POST E	NOTE
265							
	75-80	**CR014**	**CR013**				
340							
	83->	**CR023**	**CR006**				
Automatic	79->	**CR023**	**CR006**				
	80-85		**CR006**				
	86-92	**CR001**		Singolo			
	75-80	**CR023**	**CR006**				
343L-343DL	79->	**CR023**	**CR006**				
1.4	79-82	**CR023**	**CR006**				
	80-85	**CR023**	**CR006**				
345							
	80-85	**CR023**	**CR006**				
1.4	80-82	**CR023**	**CR006**				
360							
	80-85	**CR023**	**CR006**				
	85->	**CR023**	**CR006**			**CR001**	
	86-92	**CR001**		Singolo			
480							
ES	86-88	**CR002**		Singolo			
ES	88->	**CR002**		Singolo			
740							
	84-87		**CR034**				
760							
	82-87		**CR034**				
780							
	85-87		**CR034**				

4

CUSCINETTI RUOTA
WHEEL BEARING
ROLEMENTS ROUE

ZASTAVA

MODELLO	ANNO	ANT I	ANT E	NOTE	POST I	POST E	NOTE
YUGO							
45-46	81-90	**CR001**		Singolo			
101	78-82	**CR001**		Singolo			
101	82-90	**CR002**		Singolo			
750							
	78-86	**CR046**	**CR045**			**CR047**	
850							
	78-86	**CR046**	**CR045**			**CR047**	

CUSCINETTI RUOTA
WHEEL BEARING
ROLEMENTS ROUE
LISTA DI COMPARAZIONE - CROSS REFERENCES - LISTE CORRISPONDANCE

CORAM	APPLICAZIONE	RIF. ORIGINALE	SKF	FAG	SNR	LORETT	IRB	SNT	DIMENSIONI	NOTE
CR001	FIAT	5937306	633313	529891	GB10790S05	C171	8040	199001	30x60x37	sfere/balls
CR001	FIAT	4178737	633313	529891	GB10790S05	C171	8040	199001	30x60x37	sfere/balls
CR001	LADA	21083104020	633313	529891	GB10790S05	C171	8040	199001	30x60x37	sfere/balls
CR001	LANCIA	5947834	633313	529891	GB10790S05	C171	8040	199001	30x60x37	sfere/balls
CR001	SEAT	XO44438800	633313	529891	GB10790S05	C171	8040	199001	30x60x37	sfere/balls
CR001/R VERSIONE DEL CR001 A RULLI CONICI - CR001 TAPER ROLLER BEARING VERSION										
CR002	FIAT/LANCIA	46439334	633295	541153	GB10840S02	C172	8026	199002	35x68x37	
CR002	FIAT/LANCIA	5941798	633295	541153	GB10840S02	C172	8026	199002	35x68x37	
CR002	FIAT/LANCIA	5987091	633295	541153	GB10840S02	C172	8026	199002	35x68x37	
CR002	FIAT/LANCIA	7634573	633295	541153	GB10840S02	C172	8026	199002	35x68x37	
CR002	SEAT/VW	XO44193140	BAHB633967	541153	GB10840S02	C172	8026	199002	35x68x37	
CR002	TOFAS	46439334	633295	541153	GB10840S02	C172	8026	199002	35x68x37	
CR002	TOFAS	5941798	633295	541153	GB10840S02	C172	8026	199002	35x68x37	
CR002	TOFAS	5987091	633295	541153	GB10840S02	C172	8026	199002	35x68x37	
CR002	TOFAS	7634573	633295	541153	GB10840S02	C172	8026	199002	35x68x37	
CR003	FIAT	4438573	614593	522372		C165	8014	199004	30x65x21	
CR003	SEAT	JA14430100	630374	543909		C165	8014	199004	30x65x21	
CR004	ALFA	60554002	603694A	521771	GB12010	C034	8061	199062	42x75x37	
CR004	AUDI	443407625C	633196	533953	GB1210	C034	8061	199062	42x75x37	
CR004	BMW	31211130617	633457	545495D	GB1210	C034	8061	199062	42x75x37	
CR005	ALFA	60747301	331274	518772A		C048	2042	199046	29x50,2x14,2	
CR005	AUDI	311405625D-E	331274	518772A		C048	2042	199046	29x50,2x14,2	
CR005	BMW	31211101115	KLM45449/45410	518772A		C048	2042	199046	29x50,2x14,2	
CR005	FORD	72GB1200AA	BT1B328688AC/Q	518772A		C048	2042	199046	29x50,2x14,2	
CR005	OPEL	328022	331274	518772A		C048	2042	199046	29x50,2x14,2	
CR005	VOLKSWAGEN	311405625D	KLM45449+KLM45410	518772A		C048	2042	199046	29x50,2x14,2	
CR006	ALFA	60535941	KLM11749+KLM11710	506649		C046	2031	199015	17,4x39,8x13,8	
CR006	AUDI	311405645	KLM11749+KLM11710	506649		C046	2031	199015	17,4x39,8x13,8	
CR006	BMW	31212634104	KLM11749+KLM11710	506649		C046	2031	199015	17,4x39,8x13,8	
CR006	FORD	72GB1215AA	KLM11749+KLM11710	506649		C046	2031	199015	17,4x39,8x13,8	
CR006	MERCEDES-BENZ	0069811605	KLM11749+KLM11710	506649		C046	2031	199015	17,4x39,8x13,8	
CR006	OPEL	330011	KLM11749+KLM11710	506649		C046	2031	199015	17,4x39,8x13,8	
CR006	SEAT	311405645	KLM11749+KLM11710	506649		C046	2031	199015	17,4x39,8x13,8	
CR006	VOLVO	528996	KLM11749+KLM11710	506649		C046	2031	199015	17,4x39,8x13,8	
CR007	AUDI	811407625B-D	BAHB311315BD	540733		C302	8052	199005	39x68x37	
CR007	VOLKSWAGEN	811407625B-D	BAHB311315BD	528810		C302	8052	199005	39x68x37	
CR008	LADA	21083103020	309726DA	540466B	GB10884	C490	8041	199006	34x64x37	
CR008	OPEL	328104	309726DA	540466B	GB10884	C490	8041	199006	34x64x37	
CR008	VOLKSWAGEN	171407625A-C	309726DA	540466B	GB10884	C490	8041	199006	34x64x37	
CR009	VOLKSWAGEN	357407625A	311443B	566719	GB12320S02	C632	8095	199007	40x72x37	
CR010	FIAT	4296782	639297	534662		C142	2036	199008	28x57,1x17,4	
CR010	SEAT	JA15830800	639297	534662		C142	2036	199008	28x57,1x17,4	
CR011	FORD	81AB1215AB	332541/VQ060	540484AH49A		C411	2043		35x60x15,8	
CR012	BMW	33411124358	311396B	542186	GB12776	C491	8085	199009	39x72x37	
CR012	FORD	91AB1215AA	311396B	542186	GB12776	C491	8085	199009	39x72x37	
CR012	OPEL	328103	311396B	542186	GB12776	C491	8085	199009	39x72x37	
CR013	ALFA	60747299	KLM11949+KLM11910	505508		C064	2030	199016	19,05x45,2x15,4	
CR013	AUDI	211405645D	KLM11949+KLM11910	505508		C064	2030	199016	19,05x45,2x15,4	
CR013	BMW	31212634103	KLM11949+KLM11910	505508		C064	2030	199016	19,05x45,2x15,4	
CR013	FIAT	4096104	KLM11949+KLM11910	505508		C064	2030	199016	19,05x45,2x15,4	
CR013	FORD	81AB1238AA	KLM11949+KLM11910	505508		C064	2030	199016	19,05x45,2x15,4	
CR013	LADA	21013103025	KLM11949+KLM11910	505508		C064	2030	199016	19,05x45,2x15,4	
CR013	MERCEDES-BENZ	0009815905	KLM11949+KLM11910	505508		C064	2030	199016	19,05x45,2x15,4	
CR013	OPEL	330012	KLM11949+KLM11910	505508		C064	2030	199016	19,05x45,2x15,4	
CR013	SEAT	FA15824400	KLM11949+KLM11910	505508		C064	2030	199016	19,05x45,2x15,4	
CR013	VOLKSWAGEN	211405645D	KLM11949+KLM11910	505508		C064	2030	199016	19,05x45,2x15,4	
CR013	VOLVO	181586	KLM11949+KLM11910	505508		C064	2030	199016	19,05x45,2x15,4	
CR014	ALFA	60523334	KLM67048+KLM67010			C065	2050	199017	31,7x59,1x15,8	
CR014	BMW	31212634106	KLM67048+KLM67010			C065	2050	199017	31,7x59,1x15,8	
CR014	FIAT	4096101	KLM67048+KLM67010			C065	2050	199017	31,7x59,1x15,8	
CR014	FORD	81AB1238BA	KLM67048+KLM67010			C065	2050	199017	31,7x59,1x15,8	
CR014	MERCEDES-BENZ	0009815805	KLM67048+KLM67010			C065	2050	199017	31,7x59,1x15,8	
CR014	OPEL	328018	KLM67048+KLM67010			C065	2050	199017	31,7x59,1x15,8	
CR014	SEAT	GE15823600	KLM67048+KLM67010			C065	2050	199017	31,7x59,1x15,8	
CR014	SKODA	969300590	KLM67048+KLM67010			C065	2050	199017	31,7x59,1x15,8	
CR014	VOLKSWAGEN	211405625	KLM67048+KLM67010			C065	2050	199017	31,7x59,1x15,8	
CR014	VOLVO	181589	KLM67048+KLM67010			C065	2050	199017	31,7x59,1x15,8	

CUSCINETTI RUOTA
WHEEL BEARING
ROLEMENTS ROUE
LISTA DI COMPARAZIONE - CROSS REFERENCES - LISTE CORRISPONDANCE

CORAM	APPLICAZIONE	RIF. ORIGINALE	SKF	FAG	SNR	LORETT	IRB	SNT	DIMENSIONI	NOTE
CR015	VOLKSWAGEN	191407625	311309	544307	GB12136	C630	8065	199010	35x66x37	
CR016	ALFA	60801380	633531B	562398	GB12131S03	C185	8066	199045	37x72x37	
CR016	FIAT	82390273	633531B	562398	GB12131S03	C185	8066	199045	37x72x37	
CR016	RENAULT	7703090353	633531B	562398	GB12131S03	C185	8066	199045	37x72x37	
CR017	FIAT	7558750	633676		GB12306S01	C199	8089	199055	35x66x33	
CR017	FIAT	46423870	633676		GB12306S01	C199	8089	199055	35x66x33	
CR018	FIAT	7555466	633669A		GB12862	C200	8055	199011	35x72x33	
CR018	FIAT	7555466	BAH0013		GB12862	C200	8094	199011	35x72x33	
CR018	PEUGEOT	3326.31	446762B		GB12862	C200	8055	199057	35x72x33	
CR018	PEUGEOT	3326.43	446762B		GB12862	C200	8055	199057	35x72x33	
CR019	AUDI	861407625	BAHB311316B	561447		C300	8051	199012	34x62x37	
CR019	VOLKWAGEN	867407625A	309724	531910		C300	8051	199012	34x62x37	
CR020	FIAT	4009067	639154	512786		C121	2029	199089	26x57,1x17,4	
CR020	LADA	21013103020	639154	512786		C121	2029	199089	26x57,1x17,4	
CR021	OPEL	090447280	636114A	580400		C489	8622	199071	34x66x37	
CR021	OPEL	328106	636114A	580400		C489	8622	199071	34x66x37	
CR022	IVECO	4096587	KLM48548/KLM48510			C460	2052		34,9x65x18	
CR022	MERCEDES-BENZ	0019802902	KLM48548/KLM48510			C460	2052		34,9x65x18	
CR022	MERCEDES-BENZ	0009816405	KLM48548/KLM48510			C460	2052		34,9x65x18	
CR022	MERCEDES-BENZ	0059817805	KLM48548/KLM48510			C460	2052		34,9x65x18	
CR022	MERCEDES-BENZ	0059818005	KLM48548/KLM48510			C460	2052		34,9x65x18	
CR022	MERCEDES-BENZ	6089810205	KLM48548/KLM48510			C460	2052		34,9x65x18	
CR022	NISSAN	40210-F1700	KLM48548/KLM48510			C460	2052		34,9x65x18	
CR022	TOYOTA	90368-34020	KLM48548/KLM48510			C460	2052		34,9x65x18	
CR023	ALFA	60724054	KLM44649/KLM44610	506650		C047	2026	199020	26,9x50,2x14,2	
CR023	ALFA	116002141300	KLM44649/KLM44610	506650		C047	2026	199020	26,9x50,2x14,2	
CR023	BMW	0009801504.4	KLM44649/KLM44610	506650		C047	2026	199020	26,9x50,2x14,2	
CR023	BMW	2634105	KLM44649/KLM44610	506650		C047	2026	199020	26,9x50,2x14,2	
CR023	DAF	70528997	KLM44649/KLM44610	506650		C047	2026	199020	26,9x50,2x14,2	
CR023	DAIHATSU	90368-26013	KLM44649/KLM44610	506650		C047	2026	199020	26,9x50,2x14,2	
CR023	FORD	3024E1200A1	KLM44649/KLM44610	506650		C047	2026	199020	26,9x50,2x14,2	
CR023	FORD	0527973	KLM44649/KLM44610	506650		C047	2026	199020	26,9x50,2x14,2	
CR023	MERCEDES-BENZ	6089810305	KLM44649/KLM44610	506650		C047	2026	199020	26,9x50,2x14,2	
CR023	MITSUBISHI	MA125842	KLM44649/KLM44610	506650		C047	2026	199020	26,9x50,2x14,2	
CR023	MITSUBISHI	MA001835	KLM44649/KLM44610	506650		C047	2026	199020	26,9x50,2x14,2	
CR023	NISSAN	40210-A0800	KLM44649/KLM44610	506650		C047	2026	199020	26,9x50,2x14,2	
CR023	OPEL	328017	KLM44649/KLM44610	506650		C047	2026	199020	26,9x50,2x14,2	
CR023	ROVER	GHB-101	KLM44649/KLM44610	506650		C047	2026	199020	26,9x50,2x14,2	
CR023	SAAB	8906240	KLM44649/KLM44610	506650		C047	2026	199020	26,9x50,2x14,2	
CR023	TALBOT	203339D	KLM44649/KLM44610	506650		C047	2026	199020	26,9x50,2x14,2	
CR023	TALBOT	0054381200	KLM44649/KLM44610	506650		C047	2026	199020	26,9x50,2x14,2	
CR023	TALBOT	4454381200	KLM44649/KLM44610	506650		C047	2026	199020	26,9x50,2x14,2	
CR023	TOYOTA	90368-26013	KLM44649/KLM44610	506650		C047	2026	199020	26,9x50,2x14,2	
CR023	TOYOTA	90368-26027	KLM44649/KLM44610	506650		C047	2026	199020	26,9x50,2x14,2	
CR023	VOLVO	528997	KLM44649/KLM44610	506650		C047	2026	199020	26,9x50,2x14,2	
CR023	VOLVO	183834	KLM44649/KLM44610	506650		C047	2026	199020	26,9x50,2x14,2	
CR024	DAF	37H6720	KLM12649+KM12610	507063		C461	2051		21,4x50x17,5	
CR024	FIAT	4096591	KLM12649+KM12610	507063		C461	2051		21,4x50x17,5	
CR024	MERCEDES-BENZ	0009816305	KLM12649+KM12610	507063		C461	2051		21,4x50x17,5	
CR024	MERCEDES-BENZ	0059817705	KLM12649+KM12610	507063		C461	2051		21,4x50x17,5	
CR024	MERCEDES-BENZ	0059817905	KLM12649+KM12610	507063		C461	2051		21,4x50x17,5	
CR024	NISSAN	40215-F1700	KLM12649+KM12610	507063		C461	2051		21,4x50x17,5	
CR024	ROVER	607199	KLM12649+KM12610	507063		C461	2051		21,4x50x17,5	
CR024	SAAB	8701906	KLM12649+KM12610	507063		C461	2051		21,4x50x17,5	
CR024	SEAT	AC15824401	KLM12649+KM12610	507063		C461	2051		21,4x50x17,5	
CR024	TOYOTA	90368-21065	KLM12649+KM12610	507063		C461	2051		21,4x50x17,5	
CR025	CITROËN	95496453	BT2B445539AA	546467	FL12025-S01	C517	2220	199053	25x52x37	
CR025	CITROËN	9549645380	BT2B445539AA	546467	FL12025-S01	C517	2220	199053	25x52x37	
CR025	CITROËN	9559222680	BT2B445539AA	546467	FL12025-S01	C517	2220	199053	25x52x37	
CR025	CITROËN	95608940	BT2B445539AA	546467	FL12025-S01	C517	2220	199053	25x52x37	
CR025	PEUGEOT	373027	BT2B445539AA	546467	FL12025-S01	C517	2220	199053	25x52x37	
CR025	PEUGEOT	373021	BT2B445539AA	546467	FL12025-S01	C517	2220	199053	25x52x37	
CR025	PEUGEOT	4247.25	BT2B445539AA	546467	FL12025-S01	C517	2220	199053	25x52x37	
CR025	RENAULT	7703090253	BT2B445539AA	546467	FL12025-S01	C517	2220	199053	25x52x37	
CR025	RENAULT	7703090416	BT2B445539AA	546467	FL12025-S01	C517	2220	199053	25x52x37	
CR025	RENAULT	7703090434	BT2B445539AA	546467	FL12025-S01	C517	2220	199053	25x52x37	
CR025/R VERSIONE DEL CR025 A RULLI CONICI - CR025 TAPER ROLLER BEARING VERSION										

CUSCINETTI RUOTA
WHEEL BEARING
ROLEMENTS ROUE
LISTA DI COMPARAZIONE - CROSS REFERENCES - LISTE CORRISPONDANCE

CORAM	APPLICAZIONE	RIF. ORIGINALE	SKF	FAG	SNR	LORETT	IRB	SNT	DIMENSIONI	NOTE
CR026	RENAULT	7703090325			FC12180-S02	C564	2221		25x52x43	
CR026	RENAULT	7703090434			FC12180-S02	C564	2221		25x52x43	
CR027	RENAULT	7703090211	1861388	543772	10N6207F075E	C556	8017		35x72x17	
CR028	CITROËN	7903090057	32004/VB014	535410	10R32004VC12UA	C395	2038	199034	20x42x15	
CR028	CITROËN	7910012338	32004/VB014	535410	10R32004VC12UA	C395	2038	199034	20x42x15	
CR028	PEUGEOT	235819	32004/VB014	535410	10R32004VC12UA	C395	2038	199034	20x42x15	
CR028	PEUGEOT	235817	32004/VB014	535410	10R32004VC12UA	C395	2038	199034	20x42x15	
CR028	PEUGEOT	9600067680	32004/VB014	535410	10R32004VC12UA	C395	2038	199034	20x42x15	
CR028	RENAULT	7703090266	32004/VB014	535410	10R32004VC12UA	C395	2038	199034	20x42x15	
CR028	RENAULT	7903090266	32004/VB014	535410	10R32004VC12UA	C395	2038	199034	20x42x15	
CR028	TALBOT	7903090003	32004/VB014	535410	10R32004VC12UA	C395	2038	199034	20x42x15	
CR029	RENAULT	7703090199	440090	543359B	GB10702S03	C558	8101		42x84x39	
CR030	RENAULT	7703090283	445620BA	546238A	FC12033S03	C559	8042	199013	35x65x35	SNR A RULLI
CR030	RENAULT	7703090283	445620BA	546238A	FC12438	C559	8042	199013	35x65x35	SNR A SFERE
CR030/R VERSIONE DEL CR030 A RULLI CONICI - CR030 TAPER ROLLER BEARING VERSION										
CR031	RENAULT	7703090222	4010832		TGB10872S02	C557	8048		40x108x32	
CR031	RENAULT	7703090222	BA2B445533A		TGB10872S02	C557	8048		40x108x32	
CR032	BMW	31211106033	KL68149+KL68110			C370			59,1x35x15,9	
CR033	BMW	31211106032	KLM12749+KLM12710			C371			45,2x22x15,5	
CR033	MERCEDES-BENZ	0009809302	KLM12749+KLM12710			C371			45,2x22x15,5	
CR033	VOLKWAGEN	251405645B	KLM12749+KLM12710			C371			45,2x22x15,5	
CR034	CITROËN	2-620435-9	KLM12749+KLM12711			C651			46x22x15,5	Differenziale
CR034	CITROËN	2-620704-9D	KLM12749+KLM12711			C651			46x22x15,5	Differenziale
CR034	VOLVO	18074	KLM12749+KLM12711			C651			46x22x15,5	
CR034	VOLVO	18071+18070	KLM12749+KLM12711			C651			46x22x15,5	
CR034	VOLVO	184071+184070	KLM12749+KLM12711			C651			46x22x15,5	
CR035	ALFA	105641721100	KLM501349+KLM501310			C030	2040		41,2x73,4x19,5	Differenziale
CR035	ALFA	60506908	KLM501349+KLM501310			C030	2040		41,2x73,4x19,5	Differenziale
CR035	BMW	33131205124	KLM501349+KLM501310			C030	2040		41,2x73,4x19,5	Differenziale
CR035	FIAT	82047034	KLM501349+KLM501310			C030	2040		41,2x73,4x19,5	Differenziale
CR035	MERCEDES-BENZ	0019806202	KLM501349+KLM501310			C030	2040		41,2x73,4x19,5	
CR035	MERCEDES-BENZ	0019806302	KLM501349+KLM501310			C030	2040		41,2x73,4x19,5	
CR035	MERCEDES-BENZ	6089810005	KLM501349+KLM501310			C030	2040		41,2x73,4x19,5	
CR035	VOLKSWAGEN	016409123	KLM501349+KLM501310			C030	2040		41,2x73,4x19,5	
CR037	PEUGEOT	3326.12	440320 H	523854	Y44-FB10394 S02	C510	8006		40x80x30,2	
CR037	PEUGEOT	3326.20	440320 H	523854	Y44-FB10394 S02	C510	8006		40x80x30,2	
CR037	PEUGEOT	0013881300	440320 H	523854	Y44-FB10394 S02	C510	8006		40x80x30,2	
CR037	PEUGEOT	3326.29	440320 H	523854	Y44-FB10394 S02	C510	8006		40x80x30,2	
CR037	PEUGEOT	3233.6Y	440320 H	523854	Y44-FB10394 S02	C510	8006		40x80x30,2	
CR037	TALBOT	3236.64	440320 H	523854	Y44-FB10394 S02	C510	8006		40x80x30,2	
CR037	TALBOT	323629	440320 H	523854	Y44-FB10394 S02	C510	8006		40x80x30,2	
CR037	TALBOT	32366Y	440320 H	523854	Y44-FB10394 S02	C510	8006		40x80x30,2	
CR037	TALBOT	0013881300	440320 H	523854	Y44-FB10394 S02	C510	8006		40x80x30,2	
CR037	TALBOT	4412860100	440320 H	523854	Y44-FB10394 S02	C510	8006		40x80x30,2	
CR038	RENAULT	7703090365			FC12271	C572	2222		25x55x43	
CR038/R VERSIONE DEL CR038 A RULLI CONICI - CR038 TAPER ROLLER BEARING VERSION										
CR040	CITROËN	95590022	446047CA	561481	GB12163S04	C401	8086		42x82x36	
CR040	PEUGEOT	332633	446047CA	561481	GB12163S04	C401	8086		42x82x36	
CR040	PEUGEOT	9559002280	446047CA	561481	GB12163S04	C401	8086		42x82X36	
CR041	HILLMAN - PEYKAN	411280								
CR042	CITROËN-PEUGEOT	95030243	BAH5000			C388	8520		25x56x32	
CR042	CITROËN-PEUGEOT	95030243	445879AC			C388	8520		25x56x32	
CR043	FORD	89FB1238AC	BT1B329013A/Q			C426	2562		29x50,3x17,52	
CR043	FORD	6199622	BT1B329013A/Q			C426	2562		29x50,3x17,52	
CR044	ALFA	60524746	616480B	532333		C450	8100		30x72x19	
CR044	LADA	21012403080	616480B	532333		C450	8100		30x72x19	
CR044	LADA	21202403080	616480B	6306.2RS LHT23		C450	8100		30x72x19	
CR045	FIAT	336658	639213	509764A		C102	2021		15x42x13	
CR045	FIAT	46576155	639213	509764A		C102	2021		15x42x13	
CR045	SEAT	BA15823700	639213	509764A		C102	2021		15x42x13	
CR045	ZASTAVA	336658	639213	509764A		C102	2021		15x42x13	
CR046	FIAT	60055388	639175	50970A		C183	2024		23x52x15	
CR046	SEAT	BA15823600	639175	50970A		C183	2024		23x52x15	
CR046	ZASTAVA	60055388	639175	50970A		C183	2024		23x52x15	
CR047	FIAT	46576148	44645+44613	509592A		C107	2022		26x52x15	
CR047	FIAT	804862	44645+44613	509592A		C107	2022		26x52x15	
CR047	SEAT	BA14902300	639174	509592A		C107	2022		26x52x15	

CUSCINETTI RUOTA
WHEEL BEARING
ROLEMENTS ROUE
LISTA DI COMPARAZIONE - CROSS REFERENCES - LISTE CORRISPONDANCE

CORAM	APPLICAZIONE	RIF. ORIGINALE	SKF	FAG	SNR	LORETT	IRB	SNT	DIMENSIONI	NOTE
CR047	ZASTAVA	804862	639174	509592A		C107	2022		26x52x15	
CR048	CITROËN	7903090058	32005/VB015	535411	10R32005VC12UA	C393	2037		25x47x15	
CR048	PEUGEOT	237217	32005/VB015	535411	10R32005VC12UA	C393	2037		25x47x15	
CR048	PEUGEOT	237219	32005/VB015	535411	10R32005VC12UA	C393	2037		25x47x15	
CR048	PEUGEOT	237220	32005/VB015	535411	10R32005VC12UA	C393	2037		25x47x15	
CR048	PEUGEOT	373015	32005/VB015	535411	10R32005VC12UA	C393	2037		25x47x15	
CR048	PEUGEOT	373016	32005/VB015	535411	10R32005VC12UA	C393	2037		25x47x15	
CR048	RENAULT	7903090267	32005/VB015	535411	10R32005VC12UA	C393	2037		25x47x15	
CR048	TALBOT	7703090267	32005/VB015	535411	10R32005VC12UA	C393	2037		25x47x15	
CR048	TALBOT	7903090002	32005/VB015	535411	10R32005VC12UA	C393	2037		25x47x15	
CR048	TALBOT	7910012339	32005/VB015	535411	10R32005VC12UA	C393	2037		25x47x15	
CR049	FIAT	24903810	32008X			C451	2524		40x68x19	
CR049	LADA	21213103020.10	32008X			C451	2524		40x68x19	
CR049	PEUGEOT	234714	32008X			C451	2524		40x68x19	
CR049	RENAULT	7703090034	32008X			C451	2524	\	40x68x19	
CR049	VOLKWAGEN	019409123	32008X			C451	2524		40x68x19	
CR050	ALFA	530304	32006X	32006F121	32006 C	C073	2522		30x55x17,1	
CR050	ALFA	530306	32006X	32006F121	32006 C	C073	2522		30x55x17,1	
CR050	ALFA	531444	32006X	32006F121	32006 C	C073	2522		30x55x17,1	
CR050	ALFA	60502732	32006X	32006F121	32006 C	C073	2522		30x55x17,1	
CR050	CITROËN	373515	32006X	32006F121	32006 C	C073	2522		30x55x17,1	
CR050	FIAT	4470124	32006X	32006F121	32006 C	C073	2522		30x55x17,1	
CR050	PEUGEOT	373515	32006X	32006F121	32006 C	C073	2522		30x55x17,1	
CR050	VOLKSWAGEN	291407645	32006X	32006F121	32006 C	C073	2522		30x55x17,1	
CR051	CITROËN	ZF04330647	32010X/QVB026	533060	10R32010A	C210	2526	199025	50x80x20	
CR051	FIAT	4330647	32010X/QVB026	533060	10R32010A	C210	2526	199025	50x80x20	
CR051	PEUGEOT	3326.27	32010X/QVB026	533060	10R32010A	C210	2526	199025	50x80x20	
CR051	VOLKSWAGEN	091517185	32010X/QVB026	533060	10R32010A	C210	2526	199025	50x80x20	
CR052	NISSAN			559192			8651		38x74x50	
CR053	NISSAN						8698		38x74x33/36	
CR053	TOYOTA						8698		38x74x33/36	
CR054	OPEL	DU2753							27x53x43	KOYO DU2753
CR055	FORD	301023 AA		301023 AA					29x53x37	
CR055/R	**VERSIONE DEL CR038 A RULLI CONICI - CR038 TAPER ROLLER BEARING VERSION**									
CR056	MAZDA	B00133047				CR7054	2503		17,1x38x63	HK 15/15
CR056	MAZDA	B00133042				CR7054	2503		17,1x38x63	HK 15/13
CR056	MAZDA	B21033065				CR7054	2503		17,1x38x63	HK 15/15
CR056	MAZDA	B00133049				CR7054	2503		17,1x38x63	HK 15/13
CR056	MAZDA	B21033067				CR7054	2503		17,1x38x63	HK 15/13
CR056	TOYOTA	9036838001				CR7054	2503		17,1x38x63	HK 15/15
CR057	FORD	LM78349/78310			LM78349/78310				16,7x62x35	
CR058	RENAULT								25x72x43	CUSCINETTO PER MP0077
CR059	TOYOTA	3872W-8CS81							38x72x33/36	KOYO DAC3872W-8C81
CR060	FIAT	985778		509845		C119			20x43x13,27	
CR061	FIAT	336501		529901		C101			15x35x11,05	
CR062	CITROËN/PEUGEOT	3350.32S	BAH0051B		GB40547	C304	IR8740		37x72x33	TKR8740
CR063	CITROËN/PEUGEOT	3326.04.00			GB40246	C220			44X82,5X37	TKR8618 -
CR063	FIAT/LANCIA	1311506080			GB40246	C220			44X82,5X37	TKR8618 -
CR063	FIAT	1330512080			GB40246	C220			44X82,5X37	TKR8618 -

CUSCINETTI RUOTA
WHEEL BEARING
ROLEMENTS ROUE
LISTA DI COMPARAZIONE - CROSS REFERENCES - LISTE CORRISPONDANCE

DIMENSIONI	CORAM
15x35x11,05	**CR061**
15x42x13	**CR045**
16,7x62x35	**CR057**
17,1x38x63	**CR056**
17,4x39,8x13,8	**CR006**
19,05x45,2x15,4	**CR013**
20x42x15	**CR028**
20x43x13,27	**CR060**
21,4x50x17,5	**CR024**
23x52x15	**CR046**
25x47x15	**CR048**
25x52x37	**CR025**
25x52x43	**CR026**
25x55x43	**CR038**
25x56x32	**CR042**
25x72x43	**CR058**
26,9x50,2x14,2	**CR023**
26x52x15	**CR047**
26x57,1x17,4	**CR020**
27x53x43	**CR054**
28x57,1x17,4	**CR010**
29x50,2x14,2	**CR005**
29x50,3x17,52	**CR043**
29x53x37	**CR055**
30x55x17,1	**CR050**
30x60x37	**CR001**
30x65x21	**CR003**
30x72x19	**CR044**
31,7x59,1x15,8	**CR014**
34,9x65x18	**CR022**
34x62x37	**CR019**
34x64x37	**CR008**
34x66x37	**CR021**
35x60x15,8	**CR011**
35x65x35	**CR030**
35x66x33	**CR017**
35x66x37	**CR015**
35x68x37	**CR002**
35x72x17	**CR027**
35x72x33	**CR018**
37x72x33	**CR062**
37x72x37	**CR016**
38x72x33/36	**CR059**
38x74x33/36	**CR053**
38x74x50	**CR052**
39x68x37	**CR007**
39x72x37	**CR012**
40x108x32	**CR031**
40x68x19	**CR049**
40x72x37	**CR009**
40x80x30,2	**CR037**
41,2x73,4x19,5	**CR035**
42x75x37	**CR004**
42x82x36	**CR040**
42x84x39	**CR029**
44X82,5X37	**CR063**
45,2x22x15,5	**CR033**
46x22x15,5	**CR034**
50x80x20	**CR051**
59,1x35x15,9	**CR032**

CUSCINETTI RUOTA
WHEEL BEARING
ROLEMENTS ROUE
LISTA DI COMPARAZIONE - CROSS REFERENCES - LISTE CORRISPONDANCE

ALFA ROMEO	CORAM
530304	CR050
530306	CR050
531444	CR050
60502732	CR050
60506908	CR035
60523334	CR014
60524746	CR044
60535941	CR006
60554002	CR004
60724054	CR023
60747299	CR013
60747301	CR005
60801380	CR016
105641721100	CR035
116002141300	CR023

AUDI	CORAM
311405645	CR006
861407625	CR019
211405645D	CR013
311405625D-E	CR005
443407625C	CR004
811407625B-D	CR007

BMW	CORAM
2634105	CR023
9801504.4	CR023
31211101115	CR005
31211106032	CR033
31211106033	CR032
31211130617	CR004
31212634103	CR013
31212634104	CR006
31212634106	CR014
33131205124	CR035
33411124358	CR012

CITROËN	CORAM
3326.04.00	CR063
373515	CR050
95030243	CR042
95030243	CR042
95496453	CR025
95590022	CR040
95608940	CR025
7903090057	CR028
7903090058	CR048
7910012338	CR028
9549645380	CR025
9559222680	CR025
2-620435-9	CR034
2-620704-9D	CR034
3350.32S	CR062
ZF04330647	CR051

DAF	CORAM
70528997	CR023
37H6720	CR024

DAIHATSU	CORAM
90368-26013	CR023

FIAT	CORAM
336501	CR061
336658	CR045
804862	CR047
985778	CR060
4009067	CR020
4096101	CR014
4096104	CR013
4096591	CR024
4178737	CR001
4296782	CR010
4330647	CR051
4438573	CR003
4470124	CR050
5937306	CR001
5941798	CR002
5987091	CR002
7555466	CR018
7555466	CR018
7558750	CR017
7634573	CR002
24903810	CR049
46423870	CR017
46439334	CR002
46576148	CR047
46576155	CR045
60055388	CR046
82047034	CR035
82390273	CR016
1311506080	CR063
1330512080	CR063

FORD	CORAM
527973	CR023
6199622	CR043
301023 AA	CR055
3024E1200A1	CR023
72GB1200AA	CR005
72GB1215AA	CR006
81AB1215AB	CR011
81AB1238AA	CR013
81AB1238BA	CR014
89FB1238AC	CR043
91AB1215AA	CR012
LM78349/78310	CR057

HILLMAN	CORAM
411280	CR041

IVECO	CORAM
4096587	CR022

LADA	CORAM
21012403080	CR044
21013103020	CR020
21013103025	CR013
21083103020	CR008
21083104020	CR001
21202403080	CR044
21213103020	CR049

LANCIA	CORAM
5941798	CR002
5947834	CR001
5987091	CR002
7634573	CR002
46439334	CR002
1311506080	CR063

MAZDA	CORAM
B00133042	CR056
B00133047	CR056
B00133049	CR056
B21033065	CR056
B21033067	CR056

MERCEDES-BENZ	CORAM
9809302	CR033
9815805	CR014
9815905	CR013
9816305	CR024
9816405	CR022
19802902	CR022
19806202	CR035
19806302	CR035
59817705	CR024
59817805	CR022
59817905	CR024
59818005	CR022
69811605	CR006
6089810005	CR035
6089810205	CR022
6089810305	CR023

MITSUBISHI	CORAM
MA001835	CR023
MA125842	CR023

NISSAN	CORAM
40210-A0800	CR023
40210-F1700	CR022
40215-F1700	CR024

CUSCINETTI RUOTA
WHEEL BEARING
ROLEMENTS ROUE
LISTA DI COMPARAZIONE - CROSS REFERENCES - LISTE CORRISPONDANCE

OPEL	CORAM
328017	CR023
328018	CR014
328022	CR005
328103	CR012
328104	CR008
328106	CR021
330011	CR006
330012	CR013
90447280	CR021
DU2753	CR054

PEUGEOT	CORAM
3326.04.00	CR063
3326.12	CR037
3326.2	CR037
3326.27	CR051
3326.29	CR037
3326.31	CR018
3326.43	CR018
4247.25	CR025
234714	CR049
235817	CR028
235819	CR028
237217	CR048
237219	CR048
237220	CR048
332633	CR040
373015	CR048
373016	CR048
373021	CR025
373027	CR025
373515	CR050
13881300	CR037
95030243	CR042
95030243	CR042
9559002280	CR040
9600067680	CR028
3233.6Y	CR037
3350.32S	CR062

PEYKAN	CORAM
411280	CR041

RENAULT	CORAM
7703090034	CR049
7703090199	CR029
7703090211	CR027
7703090222	CR031
7703090222	CR031
7703090253	CR025
7703090266	CR028
7703090283	CR030
7703090283	CR030
7703090325	CR026
7703090353	CR016
7703090365	CR038
7703090416	CR025
7703090434	CR025
7703090434	CR026
7903090266	CR028
7903090267	CR048

ROVER	CORAM
607199	CR024
GHB-101	CR023

SAAB	CORAM
8701906	CR024
8906240	CR023

SEAT	CORAM
311405645	CR006
AC15824401	CR024
BA14902300	CR047
BA15823600	CR046
BA15823700	CR045
FA15824400	CR013
GE15823600	CR014
JA14430100	CR003
JA15830800	CR010
XO44193140	CR002
XO44438800	CR001

SKODA	CORAM
969300590	CR014

TALBOT	CORAM
3236.64	CR037
323629	CR037
13881300	CR037
54381200	CR023
4412860100	CR037
4454381200	CR023
7703090267	CR048
7903090002	CR048
7903090003	CR028
7910012339	CR048
203339D	CR023
32366Y	CR037

TOFAS	CORAM
5941798	CR002
5987091	CR002
7634573	CR002
46439334	CR002

TOYOTA	CORAM
9036838001	CR056
3872W-8CS81	CR059
90368-21065	CR024
90368-26013	CR023
90368-26027	CR023
90368-34020	CR022

VOLKSWAGEN	CORAM
16409123	CR035
19409123	CR049
91517185	CR051
191407625	CR015
211405625	CR014
291407645	CR050
171407625A-C	CR008
211405645D	CR013
251405645B	CR033
311405625D	CR005
357407625A	CR009
811407625B-D	CR007
867407625A	CR019
XO44193140	CR002

VOLVO	CORAM
18074	CR034
181586	CR013
181589	CR014
183834	CR023
528996	CR006
528997	CR023
18071+18070	CR034
184071+184070	CR034

ZASTAVA	CORAM
336658	CR045
804862	CR047
60055388	CR046

CUSCINETTI RUOTA
WHEEL BEARING
ROLEMENTS ROUE
LISTA DI COMPARAZIONE - CROSS REFERENCES - LISTE CORRISPONDANCE

FAG	CORAM
505508	CR013
506649	CR006
506650	CR023
507063	CR024
509845	CR060
512786	CR020
521771	CR004
522372	CR003
523854	CR037
528810	CR007
529891	CR001
529901	CR061
531910	CR019
532333	CR044
533060	CR051
533953	CR004
534662	CR010
535410	CR028
535411	CR048
540733	CR007
541153	CR002
542186	CR012
543772	CR027
543909	CR003
544307	CR015
546467	CR025
559192	CR052
561447	CR019
561481	CR040
562398	CR016
566719	CR009
580400	CR021
301023 AA	CR055
32006F121	CR050
509592A	CR047
50970A	CR046
509764A	CR045
518772A	CR005
540466B	CR008
540484AH49A	CR011
543359B	CR029
545495D	CR004
546238A	CR030
546238A	CR030
6306.2RS LHT23	CR044

IRB	CORAM
2021	CR045
2022	CR047
2024	CR046
2026	CR023
2029	CR020
2030	CR013
2031	CR006
2036	CR010
2037	CR048
2038	CR028
2040	CR035
2042	CR005
2043	CR011
2050	CR014
2051	CR024
2052	CR022
2220	CR025
2221	CR026
2222	CR038
2503	CR056
2522	CR050
2524	CR049
2526	CR051
2562	CR043
8006	CR037
8014	CR003
8017	CR027
8026	CR002
8040	CR001
8041	CR008
8042	CR030
8048	CR031
8051	CR019
8052	CR007
8055	CR018
8061	CR004
8065	CR015
8066	CR016
8085	CR012
8086	CR040
8089	CR017
8094	CR018
8095	CR009
8100	CR044
8101	CR029
8520	CR042
8622	CR021
8651	CR052
8698	CR053
8740	CR062

LORETT	CORAM
C030	CR035
C034	CR004
C046	CR006
C047	CR023
C048	CR005
C064	CR013
C065	CR014
C073	CR050
C101	CR061
C102	CR045
C107	CR047
C119	CR060
C121	CR020
C142	CR010
C165	CR003
C171	CR001
C172	CR002
C183	CR046
C185	CR016
C199	CR017
C200	CR018
C210	CR051
C220	CR063
C300	CR019
C302	CR007
C304	CR062
C370	CR032
C371	CR033
C388	CR042
C393	CR048
C395	CR028
C401	CR040
C411	CR011
C426	CR043
C450	CR044
C451	CR049
C460	CR022
C461	CR024
C489	CR021
C490	CR008
C491	CR012
C510	CR037
C517	CR025
C556	CR027
C557	CR031
C558	CR029
C559	CR030
C564	CR026
C572	CR038
C630	CR015
C632	CR009
C651	CR034
CR7054	CR056

SKF	CORAM
309724	CR019
311309	CR015
331274	CR005
440090	CR029
614593	CR003
630374	CR003
633196	CR004
633295	CR002
633313	CR001
633457	CR004
633676	CR017
639154	CR020
639174	CR047
639175	CR046
639213	CR045
639297	CR010
1861388	CR027
4010832	CR031
309726DA	CR008
311396B	CR012
311443B	CR009
32004/VB014	CR028
32005/VB015	CR048
32006X	CR050
32008X	CR049
32010X/QVB026	CR051
332541/VQ060	CR011
440320 H	CR037
445620BA	CR030
445879AC	CR042
446047CA	CR040
44645+44613	CR047
446762B	CR018
603694A	CR004
616480B	CR044
633531B	CR016
633669A	CR018
636114A	CR021
BA2B445533A	CR031

CUSCINETTI RUOTA
WHEEL BEARING
ROLEMENTS ROUE
LISTA DI COMPARAZIONE - CROSS REFERENCES - LISTE CORRISPONDANCE

BAH0013	**CR018**
BAH0051B	**CR062**
BAH5000	**CR042**
BAHB311315BD	**CR007**
BAHB311316B	**CR019**
BAHB633967	**CR002**
BT1B328688AC/Q	**CR005**
BT1B329013A/Q	**CR043**
BT2B445539AA	**CR025**
KL68149+KL68110	**CR032**
KLM11749+KLM11710	**CR006**
KLM11949+KLM11910	**CR013**
KLM12649+KM12610	**CR024**
KLM12749+KLM12710	**CR033**
KLM12749+KLM12711	**CR034**
KLM44649/KLM44610	**CR023**
KLM45449/45410	**CR005**
KLM45449+KLM45410	**CR005**
KLM48548/KLM48510	**CR022**
KLM501349+KLM501310	**CR035**
KLM67048+KLM67010	**CR014**

SNR	**CORAM**
10N6207F075E	**CR027**
10R32004VC12UA	**CR028**
10R32005VC12UA	**CR048**
10R32010A	**CR051**
32006 C	**CR050**
FC12033S03	**CR030**
FC12180-S02	**CR026**
FC12271	**CR038**
FC12438	**CR030**
FL12025-S01	**CR025**
GB10702S03	**CR029**
GB10790S05	**CR001**
GB10840S02	**CR002**
GB10884	**CR008**
GB12010	**CR004**
GB1210	**CR004**
GB12131S03	**CR016**
GB12136	**CR015**
GB12163S04	**CR040**
GB12306S01	**CR017**
GB12320S02	**CR009**
GB12776	**CR012**
GB12862	**CR018**
GB40246	**CR063**
GB40547	**CR062**
LM78349/78310	**CR057**
TGB10872S02	**CR031**
Y44-FB10394 S02	**CR037**

SNT	**CORAM**
199001	**CR001**
199002	**CR002**
199004	**CR003**
199005	**CR007**
199006	**CR008**
199007	**CR009**
199008	**CR010**
199009	**CR012**
199010	**CR015**
199011	**CR018**
199012	**CR019**
199013	**CR030**
199015	**CR006**
199016	**CR013**
199017	**CR014**
199020	**CR023**
199025	**CR051**
199034	**CR028**
199045	**CR016**
199046	**CR005**
199053	**CR025**
199055	**CR017**
199057	**CR018**
199062	**CR004**
199071	**CR021**
199089	**CR020**

MOZZI RUOTA
AXEL SHAFTS BEARING
MOYEUX ROUE

ALFA ROMEO

Versione	Anno	Ant Coram	Ant Originale	Post Coram	Post Originale	Note
ALFA 33						
Tutti i tipi/ All types / Tous types	->90	**MP0039**	60501373			
Tutti i tipi/ All types / Tous types	90->	**MP0040**	60559321			
ALFA 145						
145 eccetto Brasile - Gamma 97	94-98			**MP0033**	60812195	
Gamma 97	97-98			**MP0080**	60812057	POST. ABS 44 denti
Gamma 97	97-98			**MP0165**	60815429	POST. ABS 48 poli
M.Y. '99	98-00			**MP0165**	60815429	POST. ABS 48 poli
M.Y. '99	98-00			**MP0033**	60812195	
1.3 8v	94-96	**MP0022**	60800548	**MP0029**	7732410	
1.4 T.S. 16 v	97-00	**MP0022**	60800548			
1.6 8v	94-96	**MP0022**	60800548	**MP0029**	7732410	
1.6 T.S. 16v	97-00	**MP0022**	60800548			
1.7 16v	94-96	**MP0022**	60800548	**MP0029**	7732410	POST. ABS 44 denti
1.8 T.S. - 1.8 T.S. 16 v	97-00	**MP0022**	60800548			
1930 TB/DS	94-96			**MP0029**	7732410	POST. ABS 44 denti
1930 T.DS. Gamma 97- 2.0 T.S. Gamma 97-2.0 T.S. 16 v	97-00	**MP0022**	60800548			
2.0 .T. Spark 16v	94-10/95	**MP0022**	60800548	**MP0029**	7732410	POST. ABS 44 denti
2.0 .T. Spark 16v	11/95-96	**MP0022**	60800548	**MP0080**	60812057	POST. ABS 44 denti
ALFA 146						
	94-96			**MP0029**	7732410	POST. ABS 44 denti
Gamma 97 - M.Y. '99	97-00			**MP0033**	60812195	
Gamma 97	97-98			**MP0080**	60812057	POST. ABS 44 denti
Gamma 97 - M.Y. '99	97-00			**MP0165**	60815429	POST. ABS 48 poli
1.3 8v -1.6 8v- 1.7 16v - 1930 T.DS.	94-96	**MP0022**	60800548	**MP0033**	60812195	
1.4 T.S. 16v -1.6 T.S. 16v -1.8 T.S. 16v	97-00	**MP0022**	60800548			
1910 JTD M.Y. '99	98-00	**MP0079**	60545087			
1930 T.DS. -2.0 T.S. 16v	97-00	**MP0022**	60800548			
2.0 T.Spark 16 v	94-96	**MP0022**	60800548	**MP0080**	60812057	POST. ABS 44 denti
ALFA 147						
	00->			**MP0166**	60652014	POST. ABS 48 poli
1.6 TS 16v-1910 JTD 8v-1910 JTD 16v - 2.0 TS/JTS 16v	00->	**MP0086**	60811032			
3.2 GTA	00->	**MP0082**	60510369			
ALFA 155						
	92-97			**MP0029**	7732410	POST. ABS 44 denti
	92-97			**MP0033**	60812195	
1.6 T.S. 16 v -1.7 T.S. -1.8 T.S.-1.8 T.S. 16v - 1930 TD	92-97	**MP0022**	60800548			
1930 TD - 2.5 TD/T.DS.	92-96			**MP0029**	7732410	POST. ABS 44 denti
1930 TD - 2.5 TD/T.DS.	92-96			**MP0033**	60812195	
2.0 TB/BZ 4X4	92-96	**MP0079**	60545087	**MP0022**	60800548	
2.0 T.S. 8v /16v	92-97	**MP0022**	60800548			
2.5 TD/T.DS. - 2.5 TD -2.5 V6	92-97	**MP0079**	60545087			

MOZZI RUOTA
AXEL SHAFTS BEARING
MOYEUX ROUE

follows ALFA ROMEO

Versione	Anno	Ant Coram	Ant Originale	Post Coram	Post Originale	Note
ALFA 156						
156- 156 M.Y 2002- TD.ID	97->			**MP0166**	60652014	POST. ABS 48 poli
1.6 T.S.-1.8 T.S- 1.9 GTD 16V- 1910 GTD TD.ID- 1910 JTD 8v/16v-1910 JTD TD.ID-2.0 T.S.2.4 JTD TD.ID-2.5 V6		97-01	**MP0081**	60563372		
1.6 T.S -1.8 TS 16v -1.9 GTD 16v -1910 JTD 8v/16v-2.0 JTS/TS 16v-2.4 JGTD 20v-2.4JTD 10v-2.5 V6 24v	02->	**MP0081**	60563372			
3.2 GTA	02->	**MP0082**	60510369			
ALFA 164						
4X4 Super	92-97			**MP0087**	60613615	
164 Turbo-164 USA	87-92			**MP0085**	82469109	ABS 90 denti
164 Turbo-164 USA	87-92			**MP0083**	60510129	
164 USA	93-95			**MP0084**	60568138	
2.0 Cil. Turbo	87-92	**MP0082**	60510369			
2.0 T-2.5-3.0 V6	90-97	**MP0082**	60510369			
2.0 T.S. FL/92	92-97	**MP0118**	60809668	**MP0031**	82462175	
2.0	->92	**MP0022**	60800548			
Super 2.0		**MP0022**	60800548			
Super 2.0 V6-2.5 Turbo Diesel-3.0 V6	87-97	**MP0082**	60510369			
2.0 TS	87-92			**MP0028**	608088829	
2.0 ABS 90 denti	87-92			**MP0030**	60807234	
2.0 TS ABS 44 denti	93-98			**MP0031**	82462175	
2.0 Turbo (4 cyl.) - 3.0 V6 -2.5 Turbo Diesel	87-92			**MP0083**	60510129	
2.0 V6 Turbo ABS 44 denti	91-98			**MP0084**	60568138	
2.5 Turbo Diesel ABS 90 denti-3.0 V6 ABS 90 denti	87-92			**MP0085**	82469109	
2.5 Turbo Diesel ABS 44 denti - 3.0 V6 ABS 44 denti	93-98			**MP0084**	60568138	
ALFA 166						
2.0 TB V6 12v- 2.0 T.S. 16v-2.4 JTD-2.4 JTD 20v-2.5 V6 24 v- 3.0 V6 24v-3.2 V6 24v	98->	**MP0167**	60815160			
ALFA SUD SPRINT						
		MP0039	60501373			
ARNA						
1.2 L/SL-1.3 TI		**MP0039**	60501373			
GT						
	03->			**MP0166**	60652014	ABS 48 poli
1910 JTD 16v-2.0 JTS	03->	**MP0081**	60563372			
3.2 6V	03->	**MP0082**	60510369			
GTV						
1.8 -2.0	95->	**MP0086**	60811032	**MP0087**	60613615	
2.0 V6-2.0 T.S. CUP-3.0 24v-3.0 V6 24v	95->	**MP0081**	60563372	**MP0087**	60613615	
3.2 V6 24 v	98->	**MP0082**	60510369			
SPIDER						
1.8-2.0- 2.0 T. Spark 16v	95->	**MP0086**	60811032	**MP0087**	60613615	POST. ABS 44 denti
2.0 V6-3.0 V6	95->	**MP0081**	60563372	**MP0087**	60613615	POST. ABS 44 denti
3.2 V6 24v	98->	**MP0082**	60510369			

MOZZI RUOTA
AXEL SHAFTS BEARING
MOYEUX ROUE

AUDI

Versione	Anno	Ant Coram	Ant Originale	Post Coram	Post Originale	Note
80						
	87-92	**MP0042**	893407615A			
1.3 cc-1.6 cc-1.6 cc Turbo Diesel	85-86	**MP0041**	823407615A	**MP0046**	357501117A	
1.3 CC-1.6-1.6 CC-1.6 CC Turbodiesel-1.6 CD Turbodiesel-1.6 Turbodiesel-1.8-1.8 CD-1.8E/S-1.8GTE-1.8 Serret	85-91			**MP0168**	4A0501117A	fr. a disco
1.6 CD Turbo Diesel -1.8 CD-1.8 GTE	85-86			**MP0046**	357501117A	
1.6-1.6 Turbodiesel-1.8-1.8 E/S-1.8 Se rret-1.8 S Serret	87-91	**MP0043**	893407615B	**MP0088**	357501117	POST. fr. tamburo
1.8 E Quattro	87-91	**MP0043**	893407615B	**MP0043**	893407615B	
1.9 TDI-2.0-2.0 E-2.0 16v	92->	**MP0045**	893407615D	**MP0168**	4A0501117A	POST. fr. tamburo
90						
	08/86-88	**MP0042**	893407615A			
1.6 Turbo Diesel-2.0E	87->	**MP0043**	893407615B			
1.6 Turbo Diesel-2.0 E	85->	**MP0041**	823407615A	**MP0168**	4A0501117A	fr. a disco
2.2 E Quattro	85-86	**MP0044**	443407615A			
1.6 Turbo Diesel-2.0-2.0 Quattro-2.0 E	87->			**MP0088**	357501117	fr. tamburo
2.0 20v Quattro	87->	**MP0043**	893407615B	**MP0043**	893407615B	
100						
1.8 cc-2.0 cc-2.0 CD-2.0 Turbo Diesel CD-2.0 i CD-2.0 i CD-2.2 i CD-2.3 i CD	83-90	**MP0044**	443407615A			
2.0 16v-2.0 16v Avant-2.5 TDI/TDI Avant	90->	**MP0089**	4A0407615D	**MP0168**	4A0501117A	POST. fr. tamburo
A2						
1.2 TDI	01-02			**MP0169**	6E0598611	ABS 48 poli
1.4 - 1.4 TDI	00-02	**MP0170**	6Q0407621AH	**MP0171**	6Q0598611	ABS 48 poli
A3						
	96-02			**MP0090**	1J0501477A	
Nuova A3		**MP0172**	1T0498621	**MP0173**	1K0501611E	ABS 48 poli
1.6 -1.8 T -1.9 TDI	->03	**MP0150**	1J0407613C			
1.8 T Quattro Amb.-1.9 TDI Quatto Amb.	->00	**MP0150**	1J0407613C	**MP0150**	1J0407613C	
A4						
1.6-1.8-1.8 T/T-1.9 TDI -2.5 V6 TDI	->00	**MP0091**	8D0407615B	**MP0168**	4A0501117A	
1.8 T Quattro	99->	**MP0089**	4A0407615D	**MP0089**	4A0407615D	
2.8 V6 Quattro	->99	**MP0045**	893407615D			
3.0 V6 Quattro	01->			**MP0089**	4A0407615D	
A6						
	96-97			**MP0168**	4A0501117A	
1.8 T	01->	**MP0091**	8D0407615B			
2.0E-2.5 TDI	->08/97	**MP0089**	4A0407615D			

5

MOZZI RUOTA
AXEL SHAFTS BEARING
MOYEUX ROUE

follows AUDI

Versione	Anno	Ant Coram	Ant Originale	Post Coram	Post Originale	Note
ALLROAD						
2.5 TDI Quattro-2.7 T Quattro		**MP0089**	4A0407615D			
CABRIOLET						
Cabrio	92-00			**MP0168**	4A0501117A	
2.0E-2.3E-2.8EV6	->98	**MP0045**	893407615D			
COUPE'						
	81-96			**MP0168**	4A0501117A	
2.0 E	91->	**MP0045**	893407615D			
2.8 E V6 Quattro	91-96			**MP0043**	893407615B	
TT						
Roadster-TT	98->			**MP0090**	1J0501477A	
1.8 T Quattro Roadster/Coupè				**MP0150**	1J0407613C	

AUTOBIANCHI

A112						
		MP0003	4399777			
A112 E - ABARTH	70-76	**MP0003**	4399777	**MP0001**	4214408	
A112 E - ABARTH	09/76-05/84	**MP0003**	4399777	**MP0002**	4344535	
	05/84-86	**MP0003**	4399777	**MP0002**	4344535	
Y10						
1.000-1.100-1.300	85-95	**MP0006**	4400918	**MP0032**	7603485	
4X4	87-95	**MP0006**	4400918	**MP0018**	7538260	

MOZZI RUOTA
AXEL SHAFTS BEARING
MOYEUX ROUE

BMW

Versione	Anno	Ant Coram	Ant Originale	Post Coram	Post Originale	Note
316						
E30	82-91	**MP0093**	31211131297	**MP0094**	33411131118	
E30 ABS	82-91	**MP0093**	31211131297	**MP0094**	33411131118	
E36 i -E46 i	90->	**MP0092**	31221139345	**MP0174**	33411093567	
318						
E30 - E30i-E30 i Touring-E30is	82-91	**MP0093**	31211131297			
E30 ABS	82-1	**MP0093**	31211131297			
E36 i-E46i-E36i Coupè-E36i Touring-E36is-E36tds Compact/Touring-E36 ti M42	89-99	**MP0092**	31221139345			
318i	82-90			**MP0094**	33411131118	
318i Touring-is- tds Touring-is Coupè-i Cabrio-d-Ci-d Attiva-d Futura	90->			**MP0174**	33411093567	
320						
E30i	82-90	**MP0093**	31211131297	**MP0094**	33411131118	
E30i ABS	82-93	**MP0093**	31211131297			
E36i	91-99	**MP0092**	31221139345			
320i-d-Ci	90->			**MP0174**	33411093567	
323						
E30 i	81-86	**MP0093**	31211131297			
E30 i ABS	81-86	**MP0093**	31211131297			
E36 i	94-08/98	**MP0092**	31221139345			
E36 ti Compact - E46 i	97-08/98	**MP0092**	31221139345			
324						
E30	81-91	**MP0093**	31211131297			
E30 ABS	81-91	**MP0093**	31211131297			
324 D	82-90			**MP0094**	33411131118	
325						
E (E30)-E30i-E30i/5 Touring-E30ic Cabriolet	85-93	**MP0093**	31211131297			
E (E30) ABS-E30i ABS-E30ic Cabriolet ABS	85-92	**MP0093**	31211131297			
325i E36	91-99	**MP0092**	31221139345			
tds Touring- Ci	90->			**MP0174**	33411093567	
328						
E36i-E46i TT	94-08/98	**MP0092**	31221139345			

MOZZI RUOTA
AXEL SHAFTS BEARING
MOYEUX ROUE

follows BMW

Versione	Anno	Ant Coram	Ant Originale	Post Coram	Post Originale	Note
518						
E34i MOT. M40	03/91-94	**MP0092**	31221139345			
E34i MOT. M40 ABS	11/91-94	**MP0092**	31221139345			
E34i MOT. M43 ABS	11/91-95	**MP0092**	31221139345			
E34 Touring TT	92-96	**MP0092**	31221139345			
520						
E34i MOT. M50	03/91-95	**MP0092**	31221139345			
E34i MOT. M50 ABS	11/91-95	**MP0092**	31221139345			
E34i Touring	90-96	**MP0092**	31221139345			
524						
E34 TD	91	**MP0092**	31221139345			
525						
E34i MOT. M50	03/91-95	**MP0092**	31221139345			
E34i MOT. M50 ABS	11/91-12/95	**MP0092**	31221139345			
E34i Touring-E34 TD-E34 TDS	90-97	**MP0092**	31221139345			
530						
E34i MOT. M60	92-95	**MP0092**	31221139345			
E34i Touring	92-96	**MP0092**	31221139345			
535						
E34i ABS	91-97	**MP0092**	31221139345			
540						
E34i ABS	92-95	**MP0092**	31221139345			
E34i Touring	93-96	**MP0092**	31221139345			
730						
E32i MOT.M30-M30 EDC-M60	91-94	**MP0092**	31221139345			
735						
E32i-E32iL	91-94	**MP0092**	31221139345			
E32i-E32iL EDC	91-94	**MP0092**	31221139345			

MOZZI RUOTA
AXEL SHAFTS BEARING
MOYEUX ROUE

follows BMW

Versione	Anno	Ant Coram	Ant Originale	Post Coram	Post Originale	Note
740						
E32 TT	11/91-94	**MP0092**	31221139345			
750						
E32i-E32iL	11/91-94	**MP0092**	31221139345			
E32i-E32iL EDC	02/92-94	**MP0092**	31221139345			
840						
E31 Coupè TT	92-08/98	**MP0092**	31221139345			
850						
E31 Coupè i	03/92-94	**MP0092**	31221139345			
E31 Ci Coupè MOT. M70-M73	92-98	**MP0092**	31221139345			
M3						
E36 - E36 Cabriolet	92-99	**MP0092**	31221139345			
Z3						
1.8 E36-1.9 M43 E36-1.9 M44 E36-2.8 E36-3.2 E36	94->	**MP0092**	31221139345			

CHRYSLER

TOWN & COUNTRY						
	90-95	**MP0175**	4641517			ruota 15”
VOYAGER						
2.0 16v SE-2.4 16V LE-2.4 LS/LX-2.5 TD LE/SE-2.5 CRD LE/LS-3.3 LX	92->	**MP0175**	4641517			ruota 15”
2.5 TD SE- 2.5 CRD Limited/LS-3.3 AWD/Limited-3.8 V6 AWD LX	95->	**MP0175**	4641517			ruota 15”

5

MOZZI RUOTA
AXEL SHAFTS BEARING
MOYEUX ROUE

CITROËN

Versione	Anno	Ant Coram	Ant Originale	Post Coram	Post Originale	Note
AX						
		MP0095	330762			
BERLINGO						
	96->			**MP0176**	374828	solo mozzo ruota
	96->			**MP0177**	374836	ABS 29 denti; solo mozzo ruota
1.4 Multispace/ Multispace PLS Clim-1.4 SX-1.8 Multispace PLS Clim-1.9 D Enterprise Furgone-1.9 D SX	->97	**MP0096**	330769			
BX						
1.4-1.6-1.7-1.9	09/84-86	**MP0096**	330769			
1.4-1.6-1.7-1.9 ABS	87->	**MP0096**	330769			
1.1	86-92			**MP0215**	9558882680	
1.4 - 1.6 E	89-93			**MP0215**	9558882680	
1.4 E - 1.6	82-93			**MP0215**	9558882680	
1.5	87-92			**MP0215**	9558882680	
1.8 D	85-93			**MP0215**	9558882680	
1.9 D	83-93			**MP0215**	9558882680	
1.9 E - TRD Turbo	88-93			**MP0215**	9558882680	
1.9 Gti	86-93			**MP0215**	9558882680	
1.9 Gti 16 V	87-93			**MP0215**	9558882680	
BX Break						
1.4	89-93			**MP0215**	9558882680	SW
1.5	87-92			**MP0215**	9558882680	SW
1.6	85-94			**MP0215**	9558882680	SW
1.8 D	85-93			**MP0215**	9558882680	SW
1.9 - 1.9 Cat	86-94			**MP0215**	9558882680	SW
1.9 D	83-94			**MP0215**	9558882680	SW
1.9 TRD Turbo	83-94			**MP0215**	9558882680	SW
C2						
	03->	**MP0098**	330776			
C3						
1.1 Elegance-1.4 Exclusive/HDI Exclusive-1.6 16v Exclusive		**MP0098**	330776			
C5						
2.0 Excl./Excl.Break -2.0 HDI SX/SX Break-2.0 HPI Excl./Excl.Break-2.2 HDI Excl/Excl. Break		**MP0099**	330775			
C8						
2.0 HDI 16v Classique/Elegance-2.2 16v Elegance-2.2 HDI 16v Elegance/Executive		**MP0097**	330764			

MOZZI RUOTA
AXEL SHAFTS BEARING
MOYEUX ROUE

follows CITROËN

Versione	Anno	Ant Coram	Ant Originale	Post Coram	Post Originale	Note
C15						
1.4 Break/Club Break-1.7 D Break/Club Break		**MP0069**	330749			
1.0	84-97			**MP0215**	9558882680	furgonato
1.1	84-96			**MP0215**	9558882680	furgonato
1.1 i	88-96			**MP0215**	9558882680	furgonato
1.4 - 1.4 E	87-96			**MP0215**	9558882680	furgonato
1.4 i	91-96			**MP0215**	9558882680	furgonato
1.8 D	86-00			**MP0215**	9558882680	furgonato
EVASION						
1.9-2.0		**MP0097**	330764			
	94-00			**MP0178**	335028	ABS 48 denti; solo mozzo ruota
JUMPER						
		MP0034	330765			10-14 ql
		MP0035	330766			18 ql
JUMPY						
	95-00			**MP0178**	335028	ABS 48 denti; solo mozzo ruota
SAXO						
1.1 SX-1.4 VSX 8093<	->99	**MP0069**	330749			
1.1 SX -1.4 VSX 8094 >	->99	**MP0098**	330776			
1.1 SX-1.5 D SX- 1.6 VTS	99->	**MP0098**	330776			
VISA						
D	82->	**MP0069**	330749			
XANTIA						
	95->			**MP0176**	374828	solo mozzo ruota
	95-99			**MP0179**	374829	ABS 48 denti; solo mozzo ruota
1.6 SX-1.8 SX/SX Break-1.8 16v SX-1.9 D X-1.9TD SX/SX Break-	96->	**MP0096**	330769			
2.0 HDI-2.1 TD SX Plus Break	98->	**MP0099**	330775			
1.6 i - 1.8 i - 2.0 i - 2.0 i 16V	93-98			**MP0215**	9558882680	
1.9 D - 1.9 D Turbo	94-98			**MP0215**	9558882680	
XM						
	89-00			**MP0100**	374830	

5

MOZZI RUOTA
AXEL SHAFTS BEARING
MOYEUX ROUE

follows CITROËN

Versione	Anno	Ant Coram	Ant Originale	Post Coram	Post Originale	Note
XSARA						
1.4 SP Break-1.6 Exclusive Break-1.6 SP Break 8098<		**MP0069**	330749			
1.4 SP Break-1.6 Exclusive Break-1.6 SP Break 8099>		**MP0098**	330776			
1.4 SP Coupè-1.4SX-1.4 XP-1.6 SP Coupè-1.6 SX-1.6 XP 8098<		**MP0069**	330749			
1.4 SP Coupè-1.4SX-1.4 XP-1.6 SP Coupè-1.6 SX-1.6 XP 8099>		**MP0098**	330776			
1.4 SP Coupè-1.4SX-1.4 XP-1.6 SP Coupè-1.6 SX-1.6 XP		**MP0096**	330769			ABS
1.8-1.9-2.0 ABS		**MP0096**	330769			ABS
XSARA PICASSO						
	00-01			**MP0176**	374828	solo mozzo ruota
	00-01			**MP0177**	374836	ABS 29 denti; solo mozzo ruota
1.6-1.8 16v-2.0 HDI		**MP0096**	330769			
ZX						
1.4		**MP0069**	330749			
1.6-1.9 ABS		**MP0096**	330769			

DODGE

CARAVAN						
	90-95	**MP0175**	4641517			ruota 15”

5

MOZZI RUOTA
AXEL SHAFTS BEARING
MOYEUX ROUE

FIAT

Versione	Anno	Ant Coram	Ant Originale	Post Coram	Post Originale	Note
127						
	71-05/73			**MP0001**	4341664	
	05/73-76			**MP0001**	4341664	Ch. 1573628 <
	76-86			**MP0002**	7599461	Ch. 1573629 >
	71-86	**MP0003**	4399777			
128						
		MP0003	4399777			
	69-73	**MP0003**	4399777	**MP0001**	4214408	Ch.1289825 <
	73-09/76	**MP0003**	4399777	**MP0001**	4214408	Ch. 1289826 >
	10/76-84	**MP0003**	4399777	**MP0002**	7599461	
Rally-Coupè	71-75	**MP0003**	4399777	**MP0001**	4214408	
3p	75-76	**MP0003**	4399777	**MP0001**	4214408	Ch. 265621 >
3p	76-79	**MP0003**	4399777	**MP0002**	7599461	Ch.265622 >
BARCHETTA						
1.8 16v	95->	**MP0022**	7595521			
1.8 16 v	95->			**MP0033**	7603679	
1.8 16 v	95-04/99			**MP0080**	7769902	ABS 44 denti
1.8 16 v	05/99->			**MP0165**	60815429	ABS 48 poli
BRAVA						
Cambio automatico	95-98	**MP0021**	7608131	**MP0033**	7603679	
	95-98			**MP0080**	7769902	ABS 44 denti
1.2 16 v -1370 SPI 12v- 1580 MPI 16v-1.6 16v - 1930 DS	95-00	**MP0021**	7608131			
1.2 16v - 1.6 16v -1.8 16 v - 1910 JTD	98-00			**MP0033**	7603679	
1.2 16 v - 1.6 16v -1.8 16v - 1910 JTD	98-00			**MP0165**	60815429	ABS 48 poli
1.6 16v	98-00	**MP0022**	7595521			Turchia
1.8 16v-1910 JTD- 1910 TB/DS-1910 TD	98-00	**MP0022**	7595521			
BRAVO						
	95-98			**MP0033**	7603679	
	95-98			**MP0080**	7769902	ABS 44 denti
1.2 16v - 1370 SPI 12v - 1580 MPI 16v - 1.6 16v - 1930 DS	95-00	**MP0021**	7608131			
1.2 16v - 1.6 16v -1.8 16 v - 1910 JTD - 1910 TD - 2.0 20v	98-00			**MP0033**	7603679	
1.2 16v - 1.6 16v -1.8 16 v - 1910 JTD - 1910 TD - 2.0 20v	98-00			**MP0165**	60815429	ABS 48 poli
2.0 20v	95-00	**MP0079**	60809805			
CINQUECENTO						
	92-98	**MP0021**	7608131	**MP0032**	7603485	

5

MOZZI RUOTA
AXEL SHAFTS BEARING
MOYEUX ROUE

follows FIAT

Versione	Anno	Ant Coram	Ant Originale	Post Coram	Post Originale	Note
COUPE'						
1750 16v -2.0	93->	**MP0022**	7595521			
2.0 Turbo - 2.0 20v 5 cil. TB		**MP0079**	60809805			
1750 16v	93->			**MP0033**	7603679	
1750 16v - 2.0 - 2.0 Turbo- 2.0 20v 5 cil.	93->			**MP0029**	7613514	
CROMA						
1.9 Td-2.0-2.0 T-2.5 Td	01/91-02/95	**MP0022**	82433787			
1.9 Td-2.0-2.0 T-2.5 Td	3/95->	**MP0101**	7595521			
CHT 1.6-CHT 2.0	86-92			**MP0028**	82400997	
CHT 2.0 ABS 90 denti	86-90			**MP0030**	82469083	Ch. 285588 <
CHT 2.0 ABS 44 denti	91-92			**MP0031**	82462175	Ch. 285589 >
2.0 i.e.	86-96			**MP0028**	82400997	
2.0 i.e. ABS 90 denti	86-11/92			**MP0030**	82469083	Ch. 2025078 <
2.0 i.e. ABS 44 denti	11/92-96			**MP0031**	82462175	Ch. 2025079 >
2.0 16V	93-96			**MP0028**	82400997	
2.0 16 V ABS 44 denti	93-96			**MP0031**	82462175	
2.0 i.e. Turbo	86-96			**MP0028**	82400997	
2.0 i.e. Turbo ABS 90 denti	86-11/92			**MP0030**	82469083	Ch. 2025078<
2.0 i.e. Turbo-2.0-2.5 Turbo Diesel ABS 44 denti	11/92-96			**MP0031**	82462175	Ch. 2025079>
2.5 Diesel	86-90			**MP0028**	82400997	
2.5 Diesel ABS 90 denti	86-90			**MP0030**	82469083	
2.0-2.5 Turbo-Diesel	88-96			**MP0028**	82400997	
2.0-2.5 Turbo-Diesel ABS 90 denti	88-11/92			**MP0030**	82469083	Ch. 2025078<
2.5 V6 ABS 44 denti	93-96			**MP0031**	82462175	
DOBLO'						
	00->			**MP0033**	7603679	
	00->			**MP0180**	46554135	ABS 48 poli
1.2 8v MY.2004- 1242 MPI 8v-1596 16v-1.6 16v -1.9 DS	00->	**MP0102**	7522385			
1.3 JTD 16v-1.9 JTD -1910 JTD	00->	**MP0181**	46745258			
DUCATO						
autocarro - furgone	-> 89	**MP0105**	7569715			
4X4 R90- Nuovo Ducato R90	90-94	**MP0106**	7657422			
94 - '94 Diesel	94-01	**MP0034**	1300472080			
94	94-01	**MP0035**	1307355080			18 ql. Ch. 6194399>
94 - '94 Diesel	01->	**MP0182**	1328045080			10-14 ql
Ducato Restyl.-2.0 JTD Restyl. - 2.0 MPI Restyl. -2.3 JTD Restyl. -2.8 JTD/TD Restyl.	02->	**MP0182**	1328045080			11-15 ql
94- '94 Diesel - Ducato Restyl.- 2.0 MPI Restyl. -2.3 JTD Restyl. - 2.8 JTD/TD Restyl.	01->	**MP0183**	1328053080			18 ql.
DUNA						
Berlina	86-90			**MP0032**	7603485	
Weekend	86-90			**MP0078**	7746191	
1100 - 1300 - 1700DS	86-90	**MP0007**	4390949			Ch. 3403306 <
1100 - 1300 - 1700DS	86-90	**MP0024**	7634578			Ch. 3403307 >

MOZZI RUOTA
AXEL SHAFTS BEARING
MOYEUX ROUE

follows FIAT

Versione	Anno	Ant Coram	Ant Originale	Post Coram	Post Originale	Note
FIORINO						
	88-93	**MP0007**	4390949			Ch. 8051674 <
	88-93	**MP0024**	7634578			Ch. 8051673 >
900-1050	78-79			**MP0002**	5948422	
900-1050-1.3	79-93			**MP0017**	4459689	
	88-01			**MP0078**	7746191	
1301-1372-1580-1697 TB/DS RL	93-96	**MP0102**	7522385			
IDEA						
	04->			**MP0165**	46512973	ABS 48 poli
1.2 16v - 1.4 16v	04->	**MP0021**	7608131			
1.3 SDI-1910 JTD	04->	**MP0022**	7667265			
MAREA						
1580 - 1580 16v - 1.6 - 1.6 16v - 1.8 - 1.8 16v - 1910 JTD - 1910 TD	96-02	**MP0022**	7667265			
1.2 16v - 1370 12v	96-02	**MP0021**	7608131			
2.0 - 2.0 20 v- 2.4 JTD - 2.4 TD	96-02	**MP0079**	60809805			
	96-02			**MP0033**	7603679	
	96-99			**MP0080**	7769902	ABS 44 denti
	96-02			**MP0165**	46512973	ABS 48 poli
MULTIPLA						
1580 16v - 1596 16v - 1.6 16v - 1910 JTD	98->	**MP0022**	7667265			
	98->			**MP0033**	7603679	
	98->			**MP0165**	46512973	ABS 48 poli
PALIO						
Palio 2v - Weekend	97->			**MP0033**	7603679	
Palio 2v - Weekend	97-01			**MP0080**	7769902	ABS 44 denti
Palio 2v Extra Europa Rest. '02 - Palio Weekend Europa Rest. '02	02->			**MP0165**	46512973	ABS 48 poli
994 MPI- 1108 CARB. -1.2 SW -1242 - 1372 -1461 - 1580 - 1596 - 1697 - 1.9 -1910	97->	**MP0103**	46447445			
1461 MPI Adventure Weekend Extra Europa	02->	**MP0102**	46798592			
PANDA						
DS - 4X2 MAQ91 - 4X2 RL/86	86-03	**MP0006**	4400918	**MP0032**	7603485	
Panda Soluzione "B" - 4x4 Soluzione "B"		**MP0019**	5927842			
30-45	81-86	**MP0006**	4400918	**MP0014**	4400919	
4X4	81-03	**MP0006**	4400918	**MP0018**	5963034	
1.3 16v SDI	03->	**MP0022**	7667265			
Nuova Panda	03->			**MP0033**	7750120	
Nuova Panda	03->			**MP0165**	46512973	ABS 48 poli

MOZZI RUOTA
AXEL SHAFTS BEARING
MOYEUX ROUE

follows FIAT

Versione	Anno	Ant Coram	Ant Originale	Post Coram	Post Originale	Note
PUNTO						
GT - 1.3 16v SDI-1697 T.D.S.-1.8 16 v - 1.9 JTD-1910 JTD	93->	**MP0022**	7667265			
S/SX/ELX/Sporting/Selecta - 55-60-75-90-1.2 8v/16v- 1242 -1.4 16v - 1580 - 1697 -			93->	**MP0021**	7608131	
GT-Nuova Punto- Gamma '97 - D-TD - Cabrio-FL. '03- TB.DS. - 55-60-75-90	93->				**MP0033**	7750120
GT - Gamma '97 - Cabrio-D-TD - TB.DS. - 55-60-75-90	93-99			**MP0080**	7769902	ABS 44 denti
Nuova Punto - FL. '03	99->			**MP0165**	46512973	ABS 48 poli
REGATA						
Berlina 70 D-TDS-Weekend 70-DS-TDS		**MP0020**	7591328			
Berlina 100 S-Weekend 100 S		**MP0008**	5955456			
1.6 R/86	86->	**MP0025**	7641450			
100S-70-70S-70ES-D-DS	->85			**MP0002**	7599461	
70-70S-100S-D-DS-TDS	86->			**MP0002**	7599461	
Weekend				**MP0017**	4459689	
RITMO						
60-65-75-85-D	->81	**MP0020**	7591328	**MP0002**	5948422	
60-70-85-D	82-84	**MP0020**	7591328	**MP0002**	5948422	
60-70	85->	**MP0020**	7591328	**MP0002**	5948422	
105	->84	**MP0008**	5955456	**MP0002**	5948422	
	78-89			**MP0002**	5948422	
SCUDO						
	95->	**MP0097**	1311508080	**MP0178**	1473543080	POST. ABS 48 denti
1580 - 1867 DS -1905 DS - 2.0 JTD 8-16 v	95->	**MP0097**	1311508080			
SEICENTO						
899 SPI - 1108 MPI/SPI	98->	**MP0021**	7608131	**MP0032**	7603485	
Elettra	98->			**MP0006**	4400918	
SIENA						
Extra Europa	97->			**MP0033**	7787124	
Extra Europa	97-01			**MP0080**	7769902	ABS 44 denti
Extra Europa	02->			**MP0165**	46512973	ABS 48 poli
1242 - 1372 - 1461 -1580 - 1596 - 1697 - 1910	97->	**MP0103**	46447445			
STILO						
	01->			**MP0165**	46512973	ABS 48 poli
1.2 16 v	01-03	**MP0021**	7608131			
1.4 16v - 1.6 16v - 1.8 16 v	01->	**MP0022**	7667265			
1.9 JTD	04->	**MP0022**	7667265			80-115 cv
1.9 JTD	04->	**MP0079**	60809805			140 cv
2.4 20v	04->	**MP0079**	60809805			

MOZZI RUOTA
AXEL SHAFTS BEARING
MOYEUX ROUE

follows FIAT

Versione	Anno	Ant Coram	Ant Originale	Post Coram	Post Originale	Note
STRADA						
	99->			**MP0078**	7746191	
1242 - 1697 - 1.9 DS	99->	**MP0102**				
1910 JTD	99->	**MP0181**	46745258			
TALENTO						
	90-94	**MP0106**	7657422			
TEMPRA						
1.4-1.6		**MP0021**	7608131			
1.8-2.0	->92	**MP0021**	7608131			
1.8 SW-2.0SW-1.9 Td SW-Marengo 1.9 Td	->92	**MP0022**	7667265			
1.4-1.6-1.9 D-1.9 D SW	93->	**MP0021**	7608131			
1.8-1.9 Td	93->	**MP0022**	82433787			
1.4-1.6-1.8-1.9 Diesel-1.9 Turbo Diesel-2.0	90-96			**MP0033**	7787124	
1.4-1.6 ABS	90-92			**MP0033**	7787124	
1.4-1.6 ABS	93-96			**MP0029**	7613514	ABS 44 denti
1.8-2.0-1.9 Diesel-1.9 Turbo Diesel ABS	90-96			**MP0029**	7613514	ABS 44 denti
TIPO						
1.1-1.1 DGT-1.4-1.4 DGT-1.6-1.6 DGT-1.7D-1.7 DGT-1.9D	92->	**MP0021**	7608131			
1.8-1.9 TDS-2.0	92->	**MP0022**	82433787			
1.1-1.4-1.6	88-95			**MP0033**	7787124	
1.1-1.4-1.6 ABS	88-02/93			**MP0033**	7787124	
1.1-1.4-1.6 ABS	03/93-95			**MP0029**	7613514	
1.6 AGT-DGT	89-90			**MP0033**	7787124	
1.6 Automatic-1.8 i.e.-2.0 i.e.-2.0 16V	91-95			**MP0033**	7787124	
1.6 Automatic-2.0 16V ABS	91-95			**MP0029**	7613514	
1.8 i.e.-2.0 i.e. ABS	03/93-95			**MP0029**	7613514	
1.8-16V	89-92			**MP0033**	7787124	
1.8-16V ABS	89-92			**MP0029**	7613514	
1.7 Diesel-1.9 Turbo-Diesel	88-95			**MP0033**	7787124	
1.7 Diesel ABS	88-03/93			**MP0033**	7787124	
1.7 Diesel-1.9 Diesel ABS	04/93-95			**MP0029**	7613514	
1.9 Diesel	92-95			**MP0033**	7787124	
1.9 Diesel	92-03/93			**MP0033**	7787124	
1.9 Turbo - Diesel ABS	88-95			**MP0029**	7613514	
ULYSSE						
1.8-1.9 Td-2.0-2.0 T-2.1 Td-2.2 JTD	94->	**MP0097**	1311508080			
	94-02			**MP0178**	1473543080	POST. ABS 48 denti
UNO						
Diesel R/89 - Uno CS - Mondo - 900 R/89 - 1.0 R/89 - 1.1 R/89 - 1370 R/89- 1.5 R/89	89-95			**MP0032**	7603485	
Turbo R/89 - 1.1 CS - 1367 TD R/89 - 1697 - 1.7 CS DS. - 1930 A spirato Diesel R/89	88-95	**MP0024**	7634578			
Turbo R/89	89-93			**MP0015**	7617175	
Turbo R/89	89-93			**MP0104**	7717348	ABS 44 denti
	83-95			**MP0002**	5948422	
1.1 CS	88-91	**MP0007**	7591328			ch. 3403007 >
900 R/89 - 1.0 - 1.1 - 1.3 - 1370 - 1.5	89->	**MP0003**	4399777			
	99->	**MP0103**	46447445			India

5

MOZZI RUOTA
AXEL SHAFTS BEARING
MOYEUX ROUE

FORD

Versione	Anno	Ant Coram	Ant Originale	Post Coram	Post Originale	Note
COUGAR						
	98-02			**MP0110**	5027621	
ABS	98-02			**MP0107**	5027622	
ESCORT						
1.1 - 1.3 - 1.4 - 1.6 - 1.8 - Station Wagon - Van	86-90	**MP0056**	1644842			
1.3 D Van - 1.3 16 v - 1.4 D Van - 1.4 16v	90-93	**MP0057**	6517014			
1.3 Navy - 1.4 D Van - 1.6 16 v - 1.8 D/TD - 1.8 16V - RS 2000	90-93	**MP0058**	6517013			
FIESTA						
II serie	->89	**MP0056**	1644842			
	01/89-01/94	**MP0057**	6517014			
	01/94-08/96	**MP0058**	6517013			
96	08/95->	**MP0058**	6517013			
I/II serie - III/IV serie	94-01			**MP0110**	5027621	
III/IV serie ABS	96-01			**MP0107**	5027622	
FOCUS						
1.4-1.6-1.8-2.0		**MP0058**	6517013			
FUSION						
1.4 16 v - 1.4 TDCi - 1.6 16 v		**MP0058**	6517013			
GALAXY						
1.9-2.0-2.3-2.8		**MP0108**	7201007			
KA						
1299 cc	09/96->	**MP0058**	6517013			
MONDEO						
1.8 - 1.8 SCi - 2.0 - 2.0 TDCi - 2.5 V6	00->	**MP0184**	4103347			
1.8 16v - TD - 2.0 16v - 2.5 V6 24v	->00	**MP0109**	7346525			
I/II Berlina	93-00			**MP0110**	5027621	
I/II Berlina	93-00			**MP0107**	5027622	ABS
ORION						
1.3 - 1.4 - 1.6 - 1.6 D - 1.8 D	86-90	**MP0056**	1644842			
1.3 16v - 1.4 16 v	90-93	**MP0057**	6517014			
1.6 16 v - 1.8 D - 1.8 TD - 1.8 16v	90-93	**MP0058**	6517013			
PUMA						
1.4 16 v -1.7 16 v		**MP0058**	6517013			

MOZZI RUOTA
AXEL SHAFTS BEARING
MOYEUX ROUE

HYUNDAI

Versione	Anno	Ant Coram	Ant Originale	Post Coram	Post Originale	Note
ACCENT						
1.3-1.5	04/97-08/99	**MP0111**	5175024500			
1.6 - 1.6 Air/Comfort/FX - 2.0	->99	**MP0112**	5175029000			
1.6 - 1.6 Air/FX - 2.0 FX	09/99 - 02/02	**MP0113**	5175029100			
LANTRA						
1.6 GL/GLS -1.8 GLS/HS - 1.9 D GL	95-98	**MP0112**	5175029000			
1.5 GL	95->	**MP0113**	5175029100			
1.6 GLS Confort - 1.9 D GL/GLS	98->	**MP0113**	5175029100			
TIBURON						
1.6 FX/FX Max - 2.0 FX/FX Max	->99	**MP0112**	5175029000			

HONDA

ACCORD						
Aerodeck 2.0	94->	**MP0114**	44600-S04-980			
Berlina 1.8-2.0	94-09/98	**MP0114**	44600-S04-980			
Coupé 2.0	94-98	**MP0114**	44600-S04-980			
CIVIC						
1.4	10/95->	**MP0115**	44600-S04-980			
1.5-1.6	10/95->	**MP0116**	44600-S04-A00			
1.3-1.5-1.6 Esi	10/92-09/95	**MP0115**	44600-S04-980			
1.6 Vti	10/92-09/95	**MP0116**	44600-S04-A00			
1.4-1.5-1.6 LS-1.6 SR	->03/97	**MP0117**	44600-ST3-E00			
1.4-1.4 S-1.5 LS-1.6 ES-2.0 Td	04/97->	**MP0117**	44600-ST3-E00			
Aerodeck 1.4-1.5-1.6-2.0		**MP0117**	44600-ST3-E00			
Coupè 1.6	94-96	**MP0116**	44600-S04-A00			t 100000<
LOGO						
1.3		**MP0115**	44600-S04-980			

5

MOZZI RUOTA
AXEL SHAFTS BEARING
MOYEUX ROUE

LADA

Versione	Anno	Ant Coram	Ant Originale	Post Coram	Post Originale	Note
110						
1499 cc.		**MP0061**	21083103012			
111						
1499 cc.		**MP0061**	21083103012			
NIVA						
		MP0060	21213103012			
SAMARA						
		MP0061	21083103012			

5

LANCIA

A112						
A112-A112E-A112 Abarth		**MP0003**	4260431			
A112-A112E-A112 Abarth	77-86	**MP0002**	7599461			
DEDRA						
1.6	-09/94	**MP0021**	7608131			
1.6	89-94			**MP0032**	7603485	
1.6-1.6 SW	10/94-12/97	**MP0021**	7608131			
1.6 i.e. 8V	89-97			**MP0027**	46453887	
1.6 i.e. 8V ABS	89-01/93			**MP0029**	60811481	
1.6 16V	97-98			**MP0027**	46453887	
1.6 16V ABS	97-98			**MP0029**	60811481	
1.8 i.e. 8V	89-96			**MP0027**	46453887	
1.8 i.e. 8V ABS	89-01/93			**MP0027**	46453887	
1.8 i.e. 8V ABS	02/93-95			**MP0029**	60811481	
1.8 16V	96-98			**MP0027**	46453887	
1.8 16V ABS	96-98			**MP0029**	60811481	
1.8-1.9 TDS-2.0	-09/94	**MP0022**	82433787			
1.8-1.8 SW-1.9 Td-1.9 Td SW-2.0-2.0 SW	94-01	**MP0022**	82433787			
1.9 Td	89-98			**MP0027**	46453887	
1.9 Td	89-98			**MP0029**	60811481	
2.0 i.e.	89-97			**MP0027**	46453887	
2.0 i.e. ABS	89-97			**MP0029**	60811481	
2.0 Turbo	91-92			**MP0027**	46453887	
2.0 Turbo ABS	91-92			**MP0029**	60811481	
2.0 16 V	94-01			**MP0029**	60811481	
2.0 16 V S.W. '98	94-01			**MP0027**	46453887	
2.0 16 V S.W. LS 4X4	94-01			**MP0022**	82433787	
2.0 16 V S.W. LS/LX 4X2	94-01			**MP0029**	60811481	

MOZZI RUOTA
AXEL SHAFTS BEARING
MOYEUX ROUE

follows LANCIA

Versione	Anno	Ant Coram	Ant Originale	Post Coram	Post Originale	Note
DELTA						
Evoluzione	91-94	**MP0086**	60811032	**MP0086**	60811032	
1.3-1.5	->85	**MP0007**	4390949			Ch. 235562<
1.3-1.5	->85	**MP0007**	4390949			Ch. 235563>
1.3-1.5	86-94	**MP0007**	4390949	**MP0002**	7599461	
1.3-1.5	86-94	**MP0007**	4390949			
1.3-1.5	->85			**MP0002**	7599461	Ch. 235562< - Ch. 235563>
1.6	05/93-10/97	**MP0021**	7608131			
1.6	05/93-10/97			**MP0002**	7599461	
1.6	11/97->	**MP0021**	7608131			
1.6 GT	->85	**MP0008**	5955456			Ch. 235563>
1.6 GT	->85			**MP0015**	7617175	Ch. 235563>
HF 1.6 T	->85	**MP0008**	5955456			
HF 1.6 T	->85			**MP0015**	7617175	
1.6 GT -1.6 HF Turbo-1.9 DS	86-94			**MP0015**	7617175	
1.6 GT-1.9 TDS-DS	86-94	**MP0008**	5955456			
1.6-1.8-1.9 TD	11/97->			**MP0027**	46453887	
1.6-1.8-1.9 TD-2.0 HF ABS	11/97->			**MP0029**	60811481	
1.6-1.8-1.9 Td-2.0-2.0 T ABS	05/93-10/97			**MP0029**	60811481	
1.8-1.9 Td-2.0	05/93-10/97	**MP0022**	7667265			
1.8-1.9 Td	11/97->	**MP0022**	7667265			
1.8-1.9 Td-2.0	05/93-10/97			**MP0027**	46453887	
1.9 TDS	86-94			**MP0026**	82438592	
Nuova Delta TD/DS	94-99	**MP0022**	7667265	**MP0027**	46453887	
Nuova Delta TD/DS ABS	94-99			**MP0029**	60811481	44 denti
Nuova Delta 2.0 16v TB		**MP0079**	60545087			
R/86		**MP0024**	7643294			
1.1 CARB R/86 - 1.3 CARB R/86 - 1.5 CARB R/86	86-92	**MP0007**	4390949	**MP0032**	7603485	
1.6 R/86 - 1930 TB/DS R/86	86-92	**MP0008**	5955456			Ch. 444357<
1.6 R/86 - 1930 TB/DS R/86	86-92	**MP0025**	7641450			Ch. 444357>
1.6 R/86 - 1930 TB/DS R/86	86-92			**MP0015**	7617175	
1930 TB/DS R/86	86-92			**MP0026**	82438592	
KAPPA						
Coupè - Diesel - 2.0 - 2.4 - 3.0 Belrina - 3.0 Station Wagon	94-01	**MP0167**	60815160			
LYBRA						
Berlina- Station Wagon	99->			**MP0165**	46519901	POST. ABS 48 poli
1.6-1.6 SW-1.8-1.8 SW		**MP0022**	7667265			
1.9 JTD-1.9 JTD SW-2.0-2.0 SW-2.4 JTD-2.4 JTD SW		**MP0079**	60809805			
2.4 20 v - 2.4 JTD	99->			**MP0081**	60563372	
PHEDRA						
2.0 16 v - 2.0 JTD 16 v	02->	**MP0097**	1311508080			

5

MOZZI RUOTA
AXEL SHAFTS BEARING
MOYEUX ROUE

follows LANCIA

Versione	Anno	Ant Coram	Ant Originale	Post Coram	Post Originale	Note
PRISMA						
1.3-1.5	86-94	**MP0007**	4390949			
1.3-1.5-1.6	->85	**MP0007**	4390949			
1.3-1.5-D	86->			**MP0002**	7599461	
1.3-1.5-1.6-D	->85			**MP0002**	7599461	
1.6 Cam. Aut.	->85	**MP0008**	5955456			
1.6	86->			**MP0015**	7617175	
Td	86->			**MP0026**	82438592	
Diesel				**MP0032**	7603485	
Diesel- Td	->86	**MP0008**	5955456			
Diesel- Td	86->	**MP0025**	7641450			
THEMA						
2.0-2.0 T-2.8 V6	->91	**MP0022**	82433787			
2.0-2.0 T-2.5Td-2.5 SW	92->	**MP0118**	82463292			
2.0 8V Turbo	85-88			**MP0028**	82403117	
2.0 8V-2.5 Td-2.85-V6	85-92			**MP0028**	82403117	
2.0 8V ABS 90 denti	85-92			**MP0030**	82469083	
2.0 8V ABS 44 denti	92->			**MP0031**	82462175	Ch. 303504>
2.0 16V-2.0 16V T	89-92			**MP0028**	82403117	
2.0 16V-2.0 16V T ABS 90 denti	89-92			**MP0030**	82469083	Ch. 300636<
2.0 16V ABS 44 denti	92-94			**MP0031**	82462175	Ch. 300637>
2.0 16V Turbo ABS 90 denti	89-92			**MP0030**	82469083	Ch. 303313<
2.0 16V Turbo ABS 44 denti	92-94			**MP0031**	82462175	Ch. 303314>
2.5 Td ABS 90 denti	85-08/92			**MP0030**	82469083	
2.5 Td ABS 44 denti	09/92-93			**MP0031**	82462175	
2.5 TDS-2.5 TDS SW	88-91	**MP0022**	82433787			
2.85-V6 ABS 90 denti	85-92			**MP0030**	82469083	
3.0-V6 ABS 44 denti	93-95			**MP0031**	82462175	
I.E. 8v-16v FL.92 - Turbo DS FL.92 - 3.0 V6 FL.92	92-94	**MP0101**	82463292			
8.32 R/88	88-92			**MP0085**	60801644	
THESIS						
2.0 TB - 2.4 - 2.4 JTD - 3.0 - 3.2	01->	**MP0167**	60815160			
Y10						
FL. 89 - R92	89-95	**MP0006**	4400918			
FL. 89 - R92	89-95			**MP0032**	7603485	
FL. 89 4X4 - R92 4X4	89-95			**MP0018**	5963034	
Y						
	95-00	**MP0021**	7608131			
1.3 JTD 16 v		**MP0022**	82433787			
	95-00			**MP0027**	46453887	
ABS	95-00			**MP0080**	7769902	
	95->			**MP0165**	46512973	POST. ABS 48 poli
Z						
	94-02	**MP0097**	1311508080	**MP0178**	1473543080	POST. ABS 48 denti

5

MOZZI RUOTA
AXEL SHAFTS BEARING
MOYEUX ROUE

MERCEDES-BENZ

Versione	Anno	Ant Coram	Ant Originale	Post Coram	Post Originale	Note
CLASSE A						
140 - 160 - 160 CDI- 170 CDI -190 - 210 (Avantgarde /Classic/Elegance/Evolution)				**MP0185**	1683370345	
140 - 160 - 160 CDI - 170 CDI - 190 (Avantgarde /Classic/Elegance)					**MP0186**	1683500035
140 - 160 - 160 CDI - 170 CDI (Avantgarde /Classic/Elegance)				**MP0187**	1683500435	ABS 48 denti
210 Evolution				**MP0187**	1683500435	ABS 48 denti
CLASSE A LUNGA						
140- 160 - 170 CDI - 190 - 210 (Avantgarde /Classic/Elegance/Evolution)			**MP0185**	1683370345	**MP0187**	1683500435 ABS 48 denti
CLASSE C						
180-200-220-250	->04/00	**MP0188**	2103300325			ABS 48 denti
180-200-220-250	->04/00			**MP0119**	2013571708	
200 CDI - 200 Kompressor -220 CDI Elegance	05/00->			**MP0189**	2033570008	
CLASSE C Sportcoupè						
180 Evo - 200 Kompressor Evo - 220 CDI - 230 Kompressor Evo				**MP0189**	2033570008	
CLASSE E						
200 -220-230-250D -280-300D-320 -420 S.W.	04/95->	**MP0188**	2103300325			ABS 48 denti
200 - 220 - 220 CDI - 230 - 280 - 300D - 320	95-02			**MP0120**	1243574608	
220 - 240 - 270 CDI - 320 - 500	02->			**MP0190**	2113570308	
CLK						
200 El. Coupè - 200 Kompressor - 230 Kompressor - 320 El. Cabr. - 430 Avant. Cabr. 2013571708 ANT. ABS 48 denti	99-02	**MP0188**	2103300325			**MP0119**
SLK						
200 Kompressor Evo - 230 Kompressor Evo - 320	00->	**MP0188**	2103300325	**MP0119**	2013571708	ANT. ABS 48 denti
VANEO						
1.6 - 1.7 CDI - 1. 9 (Ambiente/Family/Trend)		**MP0185**	1683370345			

5

MOZZI RUOTA
AXEL SHAFTS BEARING
MOYEUX ROUE

MINI

Versione	Anno	Ant Coram	Ant Originale	Post Coram	Post Originale	Note
MINI						
Cooper - Cooper S - One - One Clima - One De Luxe - One De Luxe C.L.	10/01->	**MP0192**	31226756889	**MP0191**	33416756830	ABS 48 poli

NISSAN

ALMERA						
1.4-1.6-2.0 D	->01/00	**MP0121**	402020M010			
1.5 Luxury - 1.8 Luxury	02/00-12/02	**MP0193**	402024M400			
MICRA						
1.0-1.3	92-12/95	**MP0122**	402024F100			
1.0-1.3	01/96->	**MP0123**	402024F105			
1.0-1.3-1.5D	02/98-02	**MP0123**	402024F105			
Nuova Micra	11/02->	**MP0194**	40204AX600			
PRIMERA						
1.6-2.0	->05/96	**MP0124**	4020290J00			
1.6-2.0	06/96-06/99	**MP0125**	402022F000			
1.6 SW-2.0 SW	01/98-06/99	**MP0125**	402022F000			

MOZZI RUOTA
AXEL SHAFTS BEARING
MOYEUX ROUE

OPEL

Versione	Anno	Ant Coram	Ant Originale	Post Coram	Post Originale	Note
AGILA						
1.0 - 1.2	04->	**MP0195**	4707270			
1.3 DT	04->	**MP0196**	4707271			
ASCONA C						
1.3 -1.6 SV/NZ/LZ	82-88	**MP0065**	326197			
1.6 D/DA/N/S/SH - 1.8 -2.0	82-88	**MP0066**	326184			
ASTRA						
Astra - Astra Classic	09/91-04/02			**MP0129**	1604004	
ASTRA F						
1.4 NV/C - 1.4 NZ/X - 1.4 NZ/1.4 SE/C - 1.4 SE	92-98	**MP0065**	326197			Cambio manuale
1.4 SE/C 1.4 SE Ch. -> P5077914 Ch. NE299999	92-98	**MP0065**	326197			Cambio automatico
1.4 SE/C 1.4 SE Ch. ->R2000000 ->R3000000 ->R4000000 ->R5000000 ->R6000000 ->R8000000	92-98	**MP0126**	326185			Cambio automatico
1.4 SE/C 1.4 SE Ch. R2000001-> R3000001-> R4000001-> R5000001-> R6000001-> R8000001->	92-98	**MP0065**	326197			Cambio automatico
1.4 SE/C 1.4 SE Ch. -> S2999999 ->S5999999 ->S6999999 ->S8999999 ->S999999	92-98	**MP0126**	326185			Kenya
1.4 SE/C 1.4 SE Cabrio Ch. -> RB000000	92-98	**MP0126**	326185			
1.4 SE/C 1.4 SE Cabrio Ch. RB000001 ->	92-98	**MP0065**	326197			Cambio a rapporto ravvicinato
1.4 SE/C 1.4 SE Cabrio Ch. RB000001 ->	92-98	**MP0126**	326185			Cambio a rapporto largo
1.4 SE/C 1.4 SE/X 1.4XE Ch.T2500001 -> T5000001-> T6000001-> T8000001-> TP000001->	92-98	**MP0128**	326196			
X 1.4 XE	92-98	**MP0065**	326197			
1.6 LZ2/1.6 NZ2 Ch. -> S2999999 ->S5999999 ->S6999999 ->S8999999 ->S999999	92-98	**MP0066**	326184			
1.6 LZ2/1.6 NZ2 Ch.T2500001 -> T5000001-> T6000001-> T8000001-> TP000001->	92-98	**MP0127**	326194			
C 1.6 NZ/X - 1.6 SZ/C - 1.6 SE Ch. -> P5077914 Ch. NE299999	92-98	**MP0065**	326197			Cambio automatico
C 1.6 NZ/X -1.6 SZ/C-1.6 SE Ch.>R2000000 ->R3000000 ->R4000000 ->R5000000 ->R6000000 ->R8000000	92-98	**MP0126**	326185			Cambio automatico
C 1.6 NZ/X -1.6 SZ/C-1.6 SE Cabrio Ch. -> RB000000	92-98	**MP0126**	326185			
C 1.6 NZ/X -1.6 SZ/C-1.6 SE Cabrio Ch. RB000001 ->	92-98	**MP0065**	326197			Cambio a rapporto ravvici-
nato						
C 1.6 NZ/X -1.6 SZ/C-1.6 SE Cabrio Ch. RB000001 ->	92-98	**MP0126**	326185			Cambio a rapporto largo
C 1.6 NZ/X-1.6 SZ/X - 1.6 SZR	92-98	**MP0065**	326197			Cambio manuale
C 1.6 NZ/X-1.6 SZ/X - 1.6 SZR Ch->R2000001 - R3000001 -> R4000001-> R5000001-> R6000001-> R8000001->	92-98	**MP0065**	326197			Cambio automatico
C 1.6 SE	92-98	**MP0126**	326185			Taiwan
C 1.6 SE/X-1.6 XEL	92-98	**MP0065**	326197			Cambio manuale
C 1.6 SE/X-1.6 XEL Ch->R2000001 - R3000001 -> R4000001-> R5000001-> R6000001-> R8000001->	92-98	**MP0065**	326197			Cambio automatico
X 1.6 XEL Ch. -> S2999999 ->S5999999 ->S6999999 ->S8999999 ->S999999	92-98	**MP0065**	326197			
X 1.6 XEL Ch. -> S2999999 ->S5999999 ->S6999999 ->S8999999 ->S999999	92-98	**MP0126**	326185			Thailandia
X 1.6 XEL Ch.T2500001 -> T5000001-> T6000001-> T8000001-> TP000001->	92-98	**MP0128**	326196			
1.7 D/1.7 DR Ch. -> P2733477 ->P5272311 ->P8202125	92-98	**MP0066**	326184			
1.7 D/1.7 DR/X - 1.7 DTL Ch. P2733478-> ->S2999999 P5273312-> ->S5999999 P8202126-> ->S8999999	92-98	**MP0126**	326185			
1.7 TD Ch. -> S2999999 ->S5999999 ->S6999999 ->S8999999 ->S999999	92-98	**MP0066**	326184			
1.7 TD Ch. -> T2500001 -> T5000001-> T6000001-> T8000001-> TP000001->	92-98	**MP0127**	326194			
X 1.7 DTL Ch. -> T2500001 -> T5000001-> T6000001-> T8000001-> TP000001->	92-98	**MP0128**	326196			
1.8 SE/C 1.8 NZ/C 1.8 XE/C1.8 XEL Ch. -> S2999999 ->S5999999 ->S6999999 ->S8999999 ->S999999	92-98	**MP0066**	326184			
1.8 SE/C 1.8 NZ/C 1.8 XE/C1.8 XEL Ch. -> T2500001 -> T5000001-> T6000001-> T8000001-> TP000001->	92-98	**MP0127**	326194			
C 1.8 SEL Ch-> T2999999 ->T5999999 ->T6999999 ->T8999999	92-98	**MP0066**	326184			Taiwan
C 2.0 NE/C 2.0 XE/X 2.0XEV Ch. -> S2999999 ->S5999999 ->S6999999 ->S8999999 ->S999999	92-98	**MP0066**	326184			
C 2.0 NE/C 2.0 XE/X 2.0XEV Ch.T2500001 -> T5000001-> T6000001-> T8000001-> TP000001->	92-98	**MP0127**	326194			
ASTRA G						
Astra	98-02	**MP0197**	1603208			4 fori
Astra	98-02	**MP0198**	1603210			5 fori
1.2 16v - 1.4 16v - 1.6 - 1.6 16v - 1.7 DTI 16 v - 1.7 TD - 1.8 16 v - 2.0 DI	98-02			**MP0129**	1604004	
1.8 16 v - 2.0 16 v - 2.0 DTI 16 v - 2.2 DTI - 2.2 16 v	98-02			**MP0199**	1604005	

MOZZI RUOTA
AXEL SHAFTS BEARING
MOYEUX ROUE

follows OPEL

Versione	Anno	Ant Coram	Ant Originale	Post Coram	Post Originale	Note
CALIBRA						
2.0 t. S1<		**MP0066**	326184			
2.0 t. T1>		**MP0127**	326194			
2.0-2.5 t. TP1>		**MP0130**	326195			
COMBO						
	01-02			**MP0129**	1604004	
CORSA						
A Tutte le versioni	83-92	**MP0065**	326197			
B Tutte le versioni	93-00	**MP0065**	326197			
C Tutte le versioni	01->	**MP0200**	326001			eccetto Z17DTH
KADETT						
D Benzina	80-84	**MP0065**	326197			
D Diesel	80-84	**MP0065**	326197			
E 1.2-1.3-1.4-1.6 NZ-C 1.6 LZ-C 1.6 NZ	85-93	**MP0065**	326197			
1.6 S-1.6 D-1.6 DA-1.6 SV - 1.8-2.0	85-93	**MP0066**	326184			
MERIVA						
1.6 16 v - 1.7 CDTI - 1.8 16 v		**MP0200**	326001			
OMEGA						
1.8	-09/93	**MP0127**	326194			
TIGRA						
Tutte le versioni	95-00	**MP0065**	326197			
VECTRA						
A 1.4 NV	89-95	**MP0065**	326197			
A 1.6 SV-1.6 NZ - 1.6 SZ	89-95	**MP0065**	326197			
A 1.6 SV	89-95	**MP0126**	326185			Cambio automatico
A C 1.6 - 1.7 D/1.7 DR / 1.7 TD	89-95	**MP0066**	326184			
A C 1.8 - 2.0	89-95	**MP0066**	326184			
A 1.6- 1.6 i - 1.6 SV - 1.7 D/TD - 2.0 i GT - 2.0 i 16v	93-95			**MP0129**	1604004	
B 1.6 LZ2/X - 1.6 XEL/Y - 1.6XE/Z - 1.6 XE- 1.7 TD Ch. X1000001-> X7000001->	96-01	**MP0130**	326195			
B 1.6 SZR- X 1.6 XEL Ch. ->W1285446 ->W5276825 ->7154258	96-01	**MP0128**	326196			
B X 1.6 SZR/X - 1.6 XEL X 1.7 TD Ch. X1000001 -> X7000001->	96-01	**MP0130**	326195			
B X 1.8 XE/Z 1.8 XE/ X 1.8 XE1/Z 1.8 XEL	96-01	**MP0127**	326194			
B 1.8 - 2.0 Ch. X1000001 -> X7000001->	96-01	**MP0130**	326195			
B X 2.0 DTL/ X 2.0 DTH	96-01	**MP0127**	326194			
B Y 2.0 - Y 2.2 - X 2.5 Ch. X1000001 -> X7000001->	96-01	**MP0130**	326195			
ZAFIRA						
	99-02	**MP0197**	1603208			4 fori
	99-02	**MP0198**	1603210			5 fori
	99-02			**MP0199**	1604005	

5

MOZZI RUOTA
AXEL SHAFTS BEARING
MOYEUX ROUE

PEUGEOT

Versione	Anno	Ant Coram	Ant Originale	Post Coram	Post Originale	Note
106						
XND-XRD-XTD-XT-Xsi		**MP0069**	330749			t. 51450000<
XN-XR		**MP0095**	330762			t. 51450000<
GTI - XN - XR/XRD/XT		**MP0098**	330776			t. 51450001>
XN-XR		**MP0095**	330762			t. 51450001>
205						
GE-GL-GR-SR-GT-GLD-GRD-SRD		**MP0069**	330749			t. 23950000<
Junior-Green-Open-Roland Garros-Look		**MP0069**	330749			t. 23950000<
XAD-XLD-XRD-XTD-XA-XE-XL-XR-XS		**MP0069**	330749			t. 23950000<
1.9 GTI		**MP0096**	330769			t. 23950001>
Junior		**MP0069**	330749			t. 23950001>
206						
1.1-1.4-1.6-1.9		**MP0098**	330776			
2.0		**MP0096**	330769			
305 II						
1.3	82-85			**MP0215**	9558882680	
1.5	82-90			**MP0215**	9558882680	
1.6 - 1.9 - 1.9 Diesel	82-88			**MP0215**	9558882680	
305 II Break						
1.3 - 1.5	82-86			**MP0215**	9558882680	SW
1.6	83-88			**MP0215**	9558882680	SW
1.9	84-88			**MP0215**	9558882680	SW
1.9 Diesel	82-88			**MP0215**	9558882680	SW
306						
1.1 - 1.4 SL - 1.6 Ch. ->O 08091	05/93->	**MP0069**	330749			t. 32000001>
1.4 - 1.4 SL Ch. O 08092 ->	97->	**MP0098**	330776			t. 32000001>
1.1 - 1.4 - 1.4 SL - 1.6 - 1.6 SR - 1.8 - 1.9 - 2.0	93->	**MP0096**	330769			t. 32000001>
1.6 SR Ch. ->O 08091	97-00	**MP0069**	330749			
307						
1.6 16v - 2.0 HDI		**MP0096**	330769			
309						
1.1-1.3		**MP0069**	330749			
1.6-1.7-1.9		**MP0096**	330769			
405						
		MP0096	330769			
1.9 4X4		**MP0096**	330769	**MP0096**	330769	

5

MOZZI RUOTA
AXEL SHAFTS BEARING
MOYEUX ROUE

follows PEUGEOT

Versione	Anno	Ant Coram	Ant Originale	Post Coram	Post Originale	Note
405 I						
1.4 - 1.6 - 1.8 TD - 1.9 - 1.9 Diesel - 1.9 Injection - 1.9 Sport MI-16	87-92			**MP0215**	9558882680	
405 I Break						
1.6 - 1.8 TD - 1.9 - 1.9 Diesel	88-92			**MP0215**	9558882680	SW
405 II						
1.4 - 1.6 - 1.8 - 1.9 D - 1.9 TD - 2.0 - 2.0 MI-16	92-95			**MP0215**	9558882680	
2.0 16V	94-95			**MP0215**	9558882680	
405 II Break						
1.4 - 1.6 - 1.8 - 1.9 D - 1.9 TD - 2.0	92-96			**MP0215**	9558882680	SW
406						
ABS 29 denti	95-99			**MP0201**	374835	solo mozzo ruota
	95-02			**MP0176**	374828	solo mozzo ruota
1.8 -1.9 - 2.0 - 2.1		**MP0096**	330769			
806						
1.9 - 2.0		**MP0097**	330764			
ABS 48 denti	94-02			**MP0178**	335028	solo mozzo ruota
807						
	02->	**MP0097**	330764			
BOXER						
1.9 D -1.9 TD - 2.0 i - 2.4 D/TD - 2.4 TDI - 2.4 4X4	94->	**MP0034**	330765			eccetto 18 ql
1.9 D -1.9 TD - 2.0 i - 2.4 D/TD - 2.4 TDI - 2.4 4X4	94->	**MP0035**	330766			18 ql
EXPERT						
ABS 48 denti	96-02			**MP0178**	335028	solo mozzo ruota
PARTNER (RANCH)						
	96-01			**MP0176**	374828	solo mozzo ruota
ABS 29 denti	96-01			**MP0177**	374836	solo mozzo ruota
1.4 - 1.9 D	96-01	**MP0096**	330769			

MOZZI RUOTA
AXEL SHAFTS BEARING
MOYEUX ROUE

PLYMOUTH

Versione	Anno	Ant Coram	Ant Originale	Post Coram	Post Originale	Note
VOYAGER						
	90-95	**MP0175**	4641517			ruota 15”

RENAULT

CLIO						
1.1-1.2-1.4	->03/94	**MP0074**	7700719140			
1.2	04/98->	**MP0074**	7700719140			
1.2 Ice-1.2 RL-1.2 RN	04/96-03/98	**MP0074**	7700719140			
1.2-1.4	04/94-03/96	**MP0074**	7700719140			
1.4 ABS	04/94-03/96	**MP0075**	7700768319			
1.4-1.6	04/98->	**MP0075**	7700768319			
1.4-1.8	04/96-03/98	**MP0075**	7700768319			
1.8-1.9	->03/94	**MP0075**	7700768319			
1.8-1.9 D	04/94-03/96	**MP0075**	7700768319			
Elettrica	91->			**MP0131**	7701204667	
ESPACE						
2.0-2.1 Td	->02/91	**MP0076**	7700715149			
2.0-2.1-2.2	03/91-02/97	**MP0076**	7700715149			
2.0 (J/S112)-2.1 D (J115)	85-90			**MP0131**	7701204667	
2.0 (J636)-2.1 D(J63D/E,S63D,J633/634/635,S635),2.2 (J/S637,J63G)	91-97			**MP0131**	7701204667	
2.2 (J116/117)	87-90			**MP0131**	7701204667	
(J112,S112,J115,S115,J116,J117 S/ABS)	85-90	**MP0077**	7700308572			
2.0 RTE/RXE/RXT - 2.2 Dt RTE/RXE/RXT	03/97-06/00	**MP0202**	7700840156			
EXPRESS						
Break	->91	**MP0074**	7700719140			
Furgone		**MP0074**	7700719140			
	86-98			**MP0131**	7701204667	

5

MOZZI RUOTA
AXEL SHAFTS BEARING
MOYEUX ROUE

follows RENAULT

Versione	Anno	Ant Coram	Ant Originale	Post Coram	Post Originale	Note
FUEGO						
	80-86	**MP0076**	7700715149			
TS-GTS-TX-GTX-Auto-TD	85->	**MP0077**	7700308572			Ch.61221>
TS-GTS-TX-GTX-Auto-TD	85			**MP0131**	7701204667	Ch.61221>
KANGOO						
1.2 - 1.4 - 1.9	->06/91	**MP0075**	7700768319			
LAGUNA						
		MP0132	7700830220			
1.9 dCi Dynamique/Privilege Grandtour	11/00->	**MP0203**	8200003026			120 CV
MEGANE						
1.4-1.6	04/99->	**MP0075**	7700768319			
1.4-1.6-1.9D-1.9 Td-2.0 Classic RT-2.0 Coach RT-2.0 RT	-03/99	**MP0075**	7700768319			
1.6 RXT Scenic-1.6 RXE Scenic-1.9-2.0	04/99->	**MP0133**	7700415121			
2.0 Coach RT 16V-1.9 dt Scenic RT-2.0 Scenic RT	-03/99	**MP0132**	7700830220			
1.4 16 v -1.6 16v - 1.9 Dci	10/02->	**MP0194**	8200046549			80CV
Break - Scenic	95-02			**MP0131**	7701204667	
Break - Scenic	95-02			**MP0204**	7701205170	ABS 44 denti
R4						
F6 furgone-GTL-TL		**MP0073**	7700628767			
R5						
GTL-TL-TS-TX	->08/84	**MP0073**	7700628767			
R6						
		MP0073	7700628767			
R9						
Td-TDE-TL-TLE-T	86->	**MP0074**	7700719140			
R11						
	86->	**MP0074**	7700719140			

MOZZI RUOTA
AXEL SHAFTS BEARING
MOYEUX ROUE

follows RENAULT

Versione	Anno	Ant Coram	Ant Originale	Post Coram	Post Originale	Note
R18						
	81-86	**MP0076**	7700715149			
1.4 (R1350)	84-86			**MP0131**	7701204667	Ch. 122601>
1.4 (R1351) 4X2	84-86			**MP0131**	7701204667	Ch. 118201>
1.4 (R1353) 4X2	84-86			**MP0131**	7701204667	Ch. 9001>
1.4 (R2350)	84-86			**MP0131**	7701204667	Ch. 4601>
1.6 (R134A)	84-85			**MP0131**	7701204667	
1.6 (R1345)	83-85			**MP0131**	7701204667	Ch. 49570>
1.6 (R1355)	83-85			**MP0131**	7701204667	Ch. 1011>
2.0 (R1343)	85-86			**MP0131**	7701204667	Ch. 11002>
2.1 D (R1346/1356)	84-86			**MP0131**	7701204667	
2.1 D (R1354) 4X2	84-86			**MP0131**	7701204667	Ch. 50001>
2.1 D (R2354)	84-86			**MP0131**	7701204667	Ch. 5001>
TS-GTL (R1351)	85-87	**MP0077**	7700308572			Ch. 118201>
TX-GTX (R1353)	84-86	**MP0077**	7700308572			Ch. 9001>
TD-GTD (R1354)	84-86	**MP0077**	7700308572			Ch. 50001>
TD (R1356)	84-85	**MP0077**	7700308572			
SOCIETE (R2350)	84->	**MP0077**	7700308572			Ch. 4601>
SOCIETE D (R2354)	84-86	**MP0077**	7700308572			Ch. 5001>
R19						
1.2-Chamade 1.2	->05/92	**MP0074**	7700719140			
1.4-1.7-1.8-1.9 TD - Chamade 1.4-1.7-1.8-1.9 TD	>-05/92	**MP0075**	7700768319			
1.4-1.8-1.9 D	06/92->	**MP0075**	7700768319			
R20						
	81-84	**MP0076**	7700715149			
(R1270)- (R1276) LS, T- (R1277) GTD-TD	84			**MP0131**	7701204667	
(R1270) TD- (R1276) TD-GTD -(R1277) LS-TS-AUTO	84	**MP0077**	7700308572			
R21						
1.4-1.7-1.9		**MP0075**	7700768319			
1.6 (K48..)-1.7 (K/S48..)	88-92			**MP0131**	7701204667	
1.9 D (K/S48..)	88-92			**MP0131**	7701204667	
2.0(B/K/L48C,B/K/L48Y,B/K/L48R,B/K/L483)-2.0(L48Q,L489)-2.0(K48J)	88-92			**MP0131**	7701204667	
2.0-2.1		**MP0076**	7700715149			
2.1 D-Td	88-92			**MP0131**	7701204667	
2.2	88-92			**MP0131**	7701204667	
BACCARA S/ABS-GTX S/ABS-RX S/ABS-TI S/ABS-TURBO D/DX S/ABS-TXE-TXI S/ABS	86-93	**MP0077**	7700308572			
R21 NEVADA						
GTS S/ABS	86-93	**MP0077**	7700308572			
GTL-GTS- GTX S/ABS	86-93	**MP0077**	7700308572			
SD-TD-TL-TS-TSE-TURBO D/DX S/ABS	86-93	**MP0077**	7700308572			
R25						
2.0-2.1		**MP0076**	7700715149			
2.0-2.0 (B 29 H, B 297)	89-90			**MP0131**	7701204667	
2.1 D-2.2	84-90			**MP0131**	7701204667	
2.0 S/ABS (B29H,B297)	89-90	**MP0077**	7700308572			
2.2 S/ABS-2.1 D S/ABS	84-90	**MP0077**	7700308572			

MOZZI RUOTA
AXEL SHAFTS BEARING
MOYEUX ROUE

follows RENAULT

Versione	Anno	Ant Coram	Ant Originale	Post Coram	Post Originale	Note
R30						
(R1270) TD	84	**MP0077**	7700308572			Ch.. 27601->
(R1270) Turbo	84			**MP0131**	7701204667	
SAFRANE						
2.0-2.5-3.0	11/96->	**MP0164**	7700830221			
2.0 (B54E,B542)	92-02/95			**MP0131**	7701204667	
2.0 (B540)-2.1 D (B546)-2.2 (B541)	92-09/96			**MP0131**	7701204667	
2.1 TD S/ABS (B546)	92->	**MP0077**	7700308572			
2.2 (B54H,B543)-2.4 Td (B548)	92-02/95			**MP0131**	7701204667	
SUPER 5						
GTR - GT Turbo - TC/Campus/SC - TD/GTD - TL/GTL/GL - TSE/GTX/Automatic	85->	**MP0074**	7700719140			
TWINGO						
1,.1 - 1.2	93->	**MP0074**	7700719140			

ROVER

25						
1.4 - 1.6 - 1.8 - 2.0		**MP0205**	RFB000170			
45						
1.4 - 2.0 TD - 2.0 V6		**MP0135**	RUB101250			
Serie 200						
214 Si	94-95	**MP0134**	EJP7459			
216 Sli - 200 - 211 - 214 16 v - 214 i - 216 16 v - 220 SDi	94->	**MP0205**	RFB000170			
400						
414-416-418	->04/95	**MP0134**	EJP7459			
414-416-420	05/95->	**MP0135**	RUB101250			
416 ABS - 418 ABS	11/93->04/95	**MP0205**	RFB000170			

MOZZI RUOTA
AXEL SHAFTS BEARING
MOYEUX ROUE

SAAB

Versione	Anno	Ant Coram	Ant Originale	Post Coram	Post Originale	Note
90						
	85			**MP0136**	8947384	Ch. F6009038<
	85-87			**MP0136**	8947384	Ch. F6009039>
99						
	82-84			**MP0136**	8947384	Ch. F6009296>
600						
1500 cc	80-05/84			**MP0002**	595948422	
1500 cc	05/84-87			**MP0002**	595948422	
900						
	82-85			**MP0136**	8947384	
Ch.C1021263/C2007508/C3006827/C6001805<						
	86-87			**MP0136**	8947384	
Ch.F1029810/F2015344/F3012345/F7010669>						
	88-93			**MP0138**	8971095	
9000						
	85-89	**MP0137**	4107462			
	85-92			**MP0138**	8971095	
	90-97	**MP0206**	4107462			

5

MOZZI RUOTA
AXEL SHAFTS BEARING
MOYEUX ROUE

SEAT

Versione	Anno	Ant Coram	Ant Originale	Post Coram	Post Originale	Note
127						
903	76-85			**MP0002**	595948422	
Fura	81-85			**MP0002**	595948422	
128						
1200	76-80			**MP0002**	595948422	
ALHAMBRA						
1.8 T - 1.8 TDI - 1.9 TDI - 2.0 - 2.8 V6		**MP0153**	7M0501655	**MP0153**	7M0501655	
ALPEA						
	04->	**MP0172**	1T0498621	**MP0173**	1K0501611E	ABS 48 poli
AROSA						
	99-07/02			**MP0151**	6X0501477	Ch. 6H-X-027501->
1.0 - 1.4 - 1.4 TDI -1.7 SDI		**MP0152**	6N0407613			
1.0 -1.4 - 1.7 D	97-03			**MP0088**	357501117	freni a tamburo
1.0 - 1.4 - 1.7 D	97-03			**MP0139**	333501117A	sx, ABS, freni a tamburo
1.0 - 1.4 - 1.7 D	97-03			**MP0140**	191501118C	dx, ABS, freni a tamburo
CORDOBA						
	97-99			**MP0140**	191501118C	dx-freni a tamburo-ABS
	97-99			**MP0088**	357501117	freni a tamburo
	97-99			**MP0139**	333501117A	sx, ABS, freni a tamburo
Cordoba - Cordoba Station Wagon	03/99-07/02			**MP0151**	6X0501477	
	02->			**MP0171**	6Q0598611	ABS 48 poli
Vario	->08/99	**MP0144**	357407613B			
Vario	93-99			**MP0088**	357501117	freni a tamburo
Vario	93-99			**MP0139**	333501117A	sx, ABS, freni a tamburo
Vario	93-99			**MP0140**	191501118C	dx-freni a tamburo-ABS
Vario	93-99			**MP0141**	333501118	dx-freni a disco -ABS
Vario	93-99			**MP0142**	191501117A	sx-freni a disco -ABS
1.0 - 1.3 - 1.4 - 1.6 - 1.8 - 1.9 D	93-96			**MP0088**	357501117	freni a tamburo
1.0 - 1.4 - 1.6 - 1.8 - 1.9 D	93-93			**MP0139**	333501117A	sx, ABS, freni a tamburo
1.0 - 1.4 - 1.6 - 1.8 - 1.9 D	93-96			**MP0140**	191501118C	dx-freni a tamburo-ABS
1.8 - 1.9 TDI - 2.0	93-99			**MP0141**	333501118	dx-freni a disco -ABS
1.8 - 1.9 TDI - 2.0	93-99			**MP0142**	191501117A	sx-freni a disco -ABS
1.0 i -1.4 i - 1.4 i 16v - 1.6 i - 1.8 i - 1.8 i 16v - 1.9 D - 1.9 SDI/TDI - 1.9 TD - 2.0 i - 2.0 i 16 v	93-99	**MP0050**	357407615			
1.0 i -1.4 i - 1.4 i 16v - 1.6 i - 1.8 i - 1.8 i 16v - 1.9 D - 1.9 SDI/TDI - 1.9 TD - 2.0 i - 2.0 i 16 v	93-99	**MP0051**	357407615A			ABS (S.C.F.)
1.0 i -1.4 i - 1.4 i 16v - 1.6 i - 1.8 i - 1.8 i 16v - 1.9 D - 1.9 SDI/TDI - 1.9 TD - 2.0 i - 2.0 i 16 v	93-99	**MP0144**	357407613B			ABS
FURA						
	82-86			**MP0002**	3981594	

5

MOZZI RUOTA
AXEL SHAFTS BEARING
MOYEUX ROUE

follows SEAT

Versione	Anno	Ant Coram	Ant Originale	Post Coram	Post Originale	Note
IBIZA						
I	11/84-05/93			**MP0002**	595948422	
1.0-1.3-1.6-1.8-1.9-2.0	->06/99	**MP0050**	357407615			
1.0-1.3-1.6-1.8-1.9	93-06/99			**MP0088**	357501117	freni a tamburo
1.2-1.5-1.7-1.9		**MP0143**	SE138140304A			
1.0 - 1.3 - 1.6 - 1.8 - 1.9 - 2.0	93-06/99	**MP0144**	357407613B			ABS
sx-freni a tamburo-ABS	93->			**MP0139**	333501117A	
dx-freni a tamburo-ABS				**MP0140**	191501118C	
dx-freni a disco-ABS	93->			**MP0141**	333501118	
sx-freni a disco-ABS				**MP0142**	191501117A	
	02->			**MP0171**	6Q0598611	ABS 48 poli
III-IV	99-02/02			**MP0151**	6X0501477	
IV	02/02->	**MP0170**	6Q0407621AH			
INCA						
	05/99-07/02			**MP0207**	6K9501477	Ch. 9K-X-023409->
1.4 i - 1.6 i - 1.7 D - 1.9 D/SDI	11/95->	**MP0050**	357407615			
1.4 i - 1.6 i - 1.7 D - 1.9 D/SDI	11/95->	**MP0051**	357407615A			ABS (S.C.F.)
1.4 i - 1.6 i - 1.7 D - 1.9 D/SDI	11/95->	**MP0144**	357407613B			ABS
LEON						
	11/99-07/02			**MP0090**	1J0501477A	
	00->	**MP0150**	1J0407613C			
MALAGA						
903-1.2-1.5-1.7 D	11/84-12/93			**MP0002**	3981594	
1.2 L/GL/GLX - 1.5 GLX - 1.7 D L/GL		**MP0143**	SE138140304A			
MARBELLA						
	82-98	**MP0006**	3981586	**MP0014**	3981593	
PANDA						
	80-85	**MP0006**	3981586	**MP0014**	3981593	
Terra-Trans	83-93	**MP0006**	3981586			
RITMO						
	78-82			**MP0002**	595948422	
RONDA						
	06/82-11/88			**MP0002**	595948422	

5

MOZZI RUOTA
AXEL SHAFTS BEARING
MOYEUX ROUE

follows SEAT

Versione	Anno	Ant Coram	Ant Originale	Post Coram	Post Originale	Note
TERRA						
903 Furgoneta	87-90	**MP0006**	3981586			
TOLEDO						
freni a tamburo	97-99			**MP0088**	357501117	
dx-freni a tamburo-ABS	97-99			**MP0140**	191501118C	
dx-freni a disco-ABS	97-99			**MP0141**	333501118	
sx-freni a disco-ABS	97-99			**MP0142**	191501117A	
	99->	**MP0150**	1J0407613C			
	04/99-07/02			**MP0090**	1J0501477A	
1.6 - 1.8 - 1.9 D/TDI	92-96			**MP0088**	357501117	freni a tamburo
1.6i - 1.8 i - 1.8 16 v - 1.9 TD - 1.9 TDI - 2.0i - 2.0 i 16v	91-99	**MP0050**	357407615			
1.6i - 1.8 i - 1.8 16 v - 1.9 TD - 1.9 TDI - 2.0i - 2.0 i 16v	91-99	**MP0051**	357407615A			ABS (S.C.F.)
1.6i - 1.8 i - 1.8 16 v - 1.9 TD - 1.9 TDI - 2.0i - 2.0 i 16v	91-99	**MP0144**	357407613B			ABS
1.8 - 1.9 D/TDI	92-96			**MP0139**	333501117A	sx, ABS, freni a tamburo
1.8 - 1.9 D/TDI	92-96			**MP0140**	191501118C	dx, ABS, freni a tamburo
1.8 - 2.0	92-96			**MP0141**	191501118D	dx, ABS, freni a disco
1.8 - 2.0	92-96			**MP0142**	191501117A	sx, ABS, freni a disco

SKODA

FABIA						
	12/99-10/01	**MP0170**	6Q0407621AH	**MP0171**	6Q0598611	Servosterzo, ABS 48 poli
FAVORITe FORMAN						
	->93	**MP0145**	115430010			
FELICIA						
1.3 - 1.6 - 1.9		**MP0146**	115430011			
OCTAVIA						
	09/96-07/02			**MP0090**	1J0501477A	
SUPERB						
1.8 T - 2.0		**MP0091**	8D0407615B			
1.9 TDI - 2.5 V6 TDI - 2.8 V6		**MP0089**	4A0407615D			

MOZZI RUOTA
AXEL SHAFTS BEARING
MOYEUX ROUE

SMART

Versione	Anno	Ant Coram	Ant Originale	Post Coram	Post Originale	Note
CITY COUPE'						
Limited/1 - Passion - Pure	-> 02/02	**MP0208**	1870V021000000	**MP0209**	2072V009000000	

TOYOTA

AVENSIS						
1.6 - 1.8 - 2.0D	10/00-04/03	**MP0210**	4350205020			
1.6 - 2.0 - 2.0 TD	->00	**MP0210**	4350205020			
CARINA						
E 1.6-2.0	92->	**MP0147**	4350220131			
CELICA						
1.08	12/99-11/02	**MP0210**	43502-05020			
COROLLA						
1.3-1.6	06/97-12/99	**MP0148**	4350212090			
1.4 - 1.8 TS - 2.0D-4D	02/02->	**MP0211**	4350202021			
YARIS						
1.0 - 1.3 - 1.4 - 1.5	01/99-12/02	**MP0213**	435020D010	**MP0212**	4241052020	

5

MOZZI RUOTA
AXEL SHAFTS BEARING
MOYEUX ROUE

VOLKSWAGEN

Versione	Anno	Ant Coram	Ant Originale	Post Coram	Post Originale	Note
BORA						
	10/98-07/02			**MP0090**	1J0501477A	
1.6 - 1.8 - 1.9 - 2.3 - 2.8		**MP0150**	1J0407613C			
CADDY						
Caddy	83-92			**MP0168**	4A0501117A	freni a tamburo
Caddy II	01/99-07/02			**MP0207**	6K9501477	
Caddy III	04->	**MP0172**	1T0498621			
CORRADO						
	->92			**MP0088**	357501117	freni a tamburo
	84-95			**MP0141**	191501118D	dx, ABS, freni a disco
	84-95			**MP0142**	191501117A	sx, ABS, freni a disco
DERBY						
	75-94	**MP0047**	861407615 A			
GOLF						
R32 - 1.4 - 1.6 - 1.6 TD - 1.8 - 1.8 GTI - 1.9 TDI- 2.0 -2.3 V5 - 2.8 V6	08/97-11/03	**MP0150**	1J0407613C			
1.1C-1.6 D-1.1 GL-1.3GL-1.6 GTD-1.5 D-1.6 TD-1.6 GTI-1.8 GTI-GL Formel E	->83	**MP0048**	175407615			
1.0 - 1.3 - 1.6 - 1.6 D/TD - 1.8 - 1.8 GTI - 1.8 GTI 16v - 1.8i - 1.8 Syncro	01/84-12/87	**MP0049**	191407615			
1.0 - 1.3 - 1.4 - 1.6 - 1.6 D/TD - 1.8 - 1.8 GTI - 1.8 GTI 16v - 1.8i - 1.8 Syncro	11/83-10/91	**MP0050**	357407615			
1.0 - 1.3 - 1.4 - 1.6 - 1.6 D/TD - 1.8 - 1.8 GTI - 1.8 GTI 16v - 1.8i - 1.8 Syncro	11/83-10/91	**MP0051**	357407615A			ABS (S.C.F.)
1.0 - 1.3 - 1.4 - 1.6 - 1.6 D/TD - 1.8 - 1.8 GTI - 1.8 GTI 16v - 1.8i - 1.8 Syncro	11/83-10/91	**MP0144**	357407613B			ABS
1.9 D/TD - 1.9 GTD - 1.9 SDI - 1.9 TDI - 2.0 - 2.0 GT	11/91-4/99	**MP0050**	357407615			
1.9 D/TD - 1.9 GTD - 1.9 SDI - 1.9 TDI - 2.0 - 2.0 GT	11/91-4/99	**MP0051**	357407615A			ABS (S.C.F.)
1.9 D/TD - 1.9 GTD - 1.9 SDI - 1.9 TDI - 2.0 - 2.0 GT	11/91-4/99	**MP0144**	357407613B			ABS
1.9 TDI GT-2.0 GTI-2.8 VR6 - 2.9 VR6	->07/97	**MP0149**	1H0407613B			
2.0 4 motion Highline - 2.3 V5 4 motion Highline - 2.8 V6 4 motion Highline	08/97-11/03	**MP0150**	1J0407613C	**MP0150**	1J0407613C	
2.3 V5 4 motion	05/99->	**MP0089**	4A0407615D			Cambio automatico
	->83			**MP0046**	357501117A	
freni a tamburo	08/88-07/92			**MP0088**	357501117	
sx-freni a tamburo-ABS	89-98			**MP0139**	333501117A	
dx-freni a tamburo-ABS	89-98			**MP0140**	333501118A	
sx-freni a disco-ABS	84-98			**MP0142**	191501117A	
dx-freni a disco-ABS	84-98			**MP0141**	333501118	
VARIANT dx e sx	->04/99			**MP0088**	357501117	
IV ABS	08/97-07/02			**MP0090**	1J0501477A	
Golf V	04->	**MP0172**	1T0498621	**MP0173**	1K0501611E	ABS 48 poli

MOZZI RUOTA
AXEL SHAFTS BEARING
MOYEUX ROUE

follows VOLKSWAGEN

Versione	Anno	Ant Coram	Ant Originale	Post Coram	Post Originale	Note
JETTA						
1.1 - 1.3 - 1.6 - 1.6 D/TD	->11/83	**MP0048**	175407615			
1.3-1.6-1.6 D-1.6 TDC-1.6 TD CL-1.6 TDGL-1.8 GT-1.8 Carat	->07/87	**MP0049**	191407615			
1.3-1.6-1.6 D-1.6 TDC-1.6 TD CL-1.6 TDGL-1.8 GT-1.8 Carat	08/87->	**MP0050**	357407615			
	84-98			**MP0141**	191501118D	dx, ABS, freni a disco
	84-98			**MP0142**	191501117A	sx, ABS, freni a disco
	89-98			**MP0139**	333501117A	dx, ABS, freni a tamburo
	89-98			**MP0140**	191501118C	sx, ABS, freni a tamburo
	->11/83			**MP0046**	357501117A	
	79-98			**MP0088**	357501117	Freni a tamburo
LUPO						
1.0-1.4 - 1.4 16v - 1.6 GTI - 1.7 SDI - 1.7	04/98-07/02			**MP0151**	6X0501477	
1.2 TDI 3L	07/99-07/02			**MP0169**	6E0598611	ABS 48 poli
1.0-1.4 16v -1.7 SDI ABS		**MP0152**	6N0407613			
NEW BEETLE						
1.9 TDI-2.0		**MP0150**	1J0407613C	**MP0090**	1J0501477A	
PASSAT						
1.6 D GL-1.6 GL-1.6 GT-1.6 TD GL - 2.0 GT	08/84-03/88	**MP0041**	823407615A			
1.6 CL - 1.6- 1.9 TD CL-1.9 TD GL-1.8 CL-1.8 GL-1.8 Gli-1.8 GT-1.8 G60-2.0 Gli-2.0 GT	04/88-07/93	**MP0050**	357407615			
1.6 CL-1.6-1.9 TD CL-1.9 TD GL-1.8 CL-1.8 GL-1.8 Gli-1.8 GT-1.8 G60-2.0 Gli-2.0 GT ABS+cor.fon.		**MP0144**	357407613B			ABS+cor.fon.
ABS	09/87-12/91	**MP0051**	357407615A			ABS (S.C.F.)
2.0 GLI-2.0 GT	08/93-07/96	**MP0149**	1H0407613B			ABS
1.6-1.8-1.8 T - 2.0 Highline - 2.5 TDI V6 Highline	08/96->	**MP0091**	8D0407615B			
1.9 TDI - 2.0 Comfortline Variant - 2.0 Highline 4 motion - 2.5 TDI V6 Highline 4 motion	08/96->	**MP0089**	4A0407615D			
2.8 V6 Highline 4 motion - 4.0 W8 4 motion	08/96->	**MP0089**	4A0407615D			
sx-freni a tamburo-ABS	88-97			**MP0139**	333501117A	
dx-freni a tamburo-ABS	88-97			**MP0140**	333501118A	
per fr. Tamburo >mod.1986 - mod.1987>	08/84-03/88	**MP0046**	357501117A			
	85-97			**MP0142**	191501117A	sx, ABS, freni a disco
	85-97			**MP0141**	191501118D	dx, ABS, freni a disco
	74-97			**MP0088**	357501117	freni a tamburo
POLO						
900 - 1100 - 1300 - 1.0 - 1.1 - 1.3 - 1.4 D	->94	**MP0047**	861407615A			
1.0 - 1.3 - 1.4 16v - 1.4 TDI - 1.6 - 1.6 GTI - 1.9D - 1.9 SDI	95-09/01	**MP0152**	6N0407613			ABS
1.0 - 1.2 - 1.3 - 1.4 - 1.4 16v - 1.4 D/TDI - 1.7 SDI - 1.9 D/TDI - 1.9 SDI	10/01 - 07/02	**MP0170**	6Q0407621AH			ABS 48 poli
1.4 16 v - 1.6 Variant - 1.9 SDI/TDI Variant	09/94-09/01	**MP0144**	357407613B			ABS
	->81			**MP0046**	357501117A	
	07/99-09/01			**MP0151**	6X0501477	
	75-00			**MP0088**	357501117	freni a tamburo
sx-freni a tamburo-ABS	95-00			**MP0139**	333501117A	
dx-freni a tamburo-ABS	95-00			**MP0140**	333501118A	
sx-freni a disco-ABS	95-00			**MP0142**	191501117A	
dx-freni a disco-ABS	95-00			**MP0141**	333501118	
t. -> 9N-2-000001->	10/01-07/02			**MP0171**	6Q0598611	ABS 48 poli

MOZZI RUOTA
AXEL SHAFTS BEARING
MOYEUX ROUE

follows VOLKSWAGEN

Versione	Anno	Ant Coram	Ant Originale	Post Coram	Post Originale	Note
SANTANA						
	74-88	**MP0041**	823407615A			
SCIROCCO						
	74-92	**MP0048**	175407615			eccetto KR-PG-9A-2E-ADY
	89-95	**MP0050**	357407615			KR-PG-9A-2E-ADY
SHARAN						
1.8 T - 2.0 Comfortline - 2.8 V6 Highline	08/00->	**MP0153**	7M0501655			
1.9 TDI-1.9 TDI GL-1.9 TDI CL-2.0-2.0 CL-2.0 GL-2.8 VR6-2.8 VR6 GL	->07/00	**MP0153**	7M0501655	**MP0153**	7M0501655	
TOURAN						
	04->	**MP0172**	1T0498621			ABS, 48 poli
VENTO						
1.4 CL-1.4 GL-1.6 CL-1.6 GL-1.8 GL-1.8 GT 1.9 D CL-1.9 DGL-1.9 TD CL-1.9 TD GL-1.9 TD GT- 1.9 TDI GL-1.9 TDI GT-2.0 CL-2.0 GL		->06/95	**MP0050**	357407615		
1.4 CL-1.4 GL-1.6 CL-1.6 GL-1.8 GL-1.8 GT-1.9 D CL-1.9 DGL-1.9 TD CL-1.9 TD GL-1.9 TD GT-1.9 TDI GL-1.9 TDI GT-2.0 CL-2.0 GL ABS+cor-fon		->06/95	**MP0144**	357407613B		ABS
2.0 GT-2.8 VR6	->06/95	**MP0149**	1H0407613B			
	79-98			**MP0088**	357501117	freni a tamburo
	84-98			**MP0141**	191501118D	dx, ABS , freni a disco
	84-98			**MP0142**	191501117A	sx, ABS, freni a disco
	89-98			**MP0139**	333501117A	sx, ABS, freni a tamburo
	89-98			**MP0140**	191501118C	dx, ABS, freni a tamburo

5

MOZZI RUOTA
AXEL SHAFTS BEARING
MOYEUX ROUE

VOLVO

Versione	Anno	Ant Coram	Ant Originale	Post Coram	Post Originale	Note
440						
1.7-T		**MP0154**	3455827			
440	90-96			**MP0155**	3472719	
ABS	89-96			**MP0156**	VKBA1437	ABS, 44 denti
460						
1.7-T		**MP0154**	3455827			
	90-96			**MP0155**	3472719	
ABS	90-96			**MP0156**	VKBA1437	ABS, 44 denti
480						
1.7-T		**MP0154**	3455827			t. 567103>
	90-96			**MP0155**	3472719	
ABS	89-96			**MP0156**	VKBA1437	ABS, 44 denti
740						
	88	**MP0157**	271394			
ABS	88	**MP0158**	271645			ABS 96 denti
	88-92	**MP0157**	271394			
ABS	89-92	**MP0159**	1359818			ABS 48 denti
2.0 DACT 16V Turbo	90-91	**MP0159**	1359818			
760						
ABS	88	**MP0158**	271449			ABS 96 denti
	88-90	**MP0157**	271394			
ABS	89-90	**MP0159**	1359818			ABS 48 denti
780						
	88	**MP0158**	271449			
	89-90	**MP0159**	1359818			
850						
	91-93	**MP0160**	271585			
	94-97	**MP0161**	271786			
AWD	96-97	**MP0161**	271786			
940						
	91-94	**MP0157**	271394			
ABS	91-94	**MP0159**	1359818			
2.0 Turbo	91-94	**MP0159**	1359818			ABS 48 denti
2.3 Turbo	93-95	**MP0159**	1359818			

MOZZI RUOTA
AXEL SHAFTS BEARING
MOYEUX ROUE

follows VOLVO

Versione	Anno	Ant Coram	Ant Originale	Post Coram	Post Originale	Note
960						
ABS	91-94 91-94 95-97	**MP0157** **MP0159** **MP0162**	271394 1359818 271905			ABS 48 denti
C70						
AWD	97-98 97-98	**MP0161** **MP0161**	271786 271786			
S40-V 40						
1.6-1.9 Td-2.0	->03/00	**MP0163**	30855922			
S70-V 70						
AWD	97-98 97-98	**MP0161** **MP0161**	271786 271786			
S 90-V 90						
	97-98	**MP0162**	271905			

ZASTAVA

ZASTAVA 600						
600 D				**MP0016**	1612961	
ZASTAVA 750						
				MP0016	1612961	
YUGO						
45-55	81-90			**MP0002**	43445350	
101 (311,313,511,513,SKALA 55,SKALA 65)	78-90			**MP0002**	4344535	

5

MOZZI RUOTA
AXEL SHAFTS BEARING
MOYEUX ROUE
LISTA DI COMPARAZIONE - CROSS REFERENCES - LISTE CORRISPONDANCE

CORAM	APPLICAZIONE	RIF. ORIGINALE	SKF	SNR	IRB	OMCAR	LORETT	NOTE
MP0001	AUTOBIANCHI	4214408	VKBA627	R158.089	K-30/32	301	C148	
MP0001	AUTOBIANCHI	4267990	VKBA627	R158.089	K-30/32	301	C148	
MP0001	AUTOBIANCHI	4341664	VKBA627	R158.089	K-30/32	301	C148	
MP0001	FIAT	4214408	VKBA627	R158.089	K-30/32	301	C148	
MP0001	FIAT	4341664	VKBA626	R158.089	K-30/32	301	C148	
MP0001	FIAT	4267990	VKBA626	R158.089	K-30/32	301	C148	
MP0001	FIAT/LANCIA	5888279	VKBA626	R158.089	K-30/32	301	C148	
MP0001	FIAT/LANCIA	5888279	BA2B633200C	R158.089	K-30/32	301	C148	
MP0001	FIAT/LANCIA	4340061	BA2B633200C	R158.089	K-30/32	301	C148	
MP0002	AUTOBIANCHI/ZASTAVA	5948422	VKBA625	R158.10	K-36/38	300	C190	
MP0002	AUTOBIANCHI/ZASTAVA	4379767	VKBA940	R158.10	K-36/38	300	C190	
MP0002	AUTOBIANCHI/ZASTAVA	4399856	VKBA940	R158.10	K-36/38	300	C190	
MP0002	FIAT/LANCIA/ZASTAVA	7599461	BA2B633265	R158.10	K-36/38	300	C190	
MP0002	FIAT/LANCIA/ZASTAVA	4344535	BAFB633622	R158.17	K-36/38	300	C190	
MP0002	FIAT/LANCIA/ZASTAVA	4381043	BA2B633265	R158.17	K-36/38	300	C190	
MP0002	FIAT/LANCIA	7599661	BA2B633265	R158.17	K-36/38	300	C190	
MP0002	SAAB	595948422	BA2B633265	R158.17	K-36/38	300	C190	
MP0002	SAAB/SEAT	3981594	BA2B633265	R158.17	K-36/38	300	C190	
MP0002	SAAB/SEAT	SE021149002A	BA2B633265	R158.17	K-36/38	300	C190	
MP0003	AUTOBIANCHI	4399777				350	CR1751	
MP0003	AUTOBIANCHI	4260431				350	CR1751	
MP0003	AUTOBIANCHI	7578589				350	CR1751	
MP0003	FIAT	7578589				350	CR1751	
MP0003	FIAT	4399039				350	CR1751	
MP0003	FIAT/LANCIA	4260431				350	CR1751	
MP0003	FIAT/LANCIA	4399777				350	CR1751	
MP0006	AUTOBIANCHI	4400918	VKBA734	R158.13	IR-8059	500	C157	
MP0006	FIAT/LANCIA	4400918	VKBA734	R158.13	IR-8059	190	C157	
MP0006	SEAT	3981586	VKBA734	R158.13	IR-8059	190	C157	
MP0006	SEAT	SE028140301A	VKBA734	R158.13	IR-8059	190	C157	
MP0007	FIAT/LANCIA	7634577				351	CR1754	
MP0007	FIAT/LANCIA	7591328				351	CR1754	
MP0007	FIAT/LANCIA	4390949				351	CR1754	
MP0008	FIAT/LANCIA	5955456				354	CR1743	
MP0014	FIAT	4400919	VKBA310	R158.14	IR-8060	501	C158	
MP0014	FIAT	4400919	VKBA310	R158.14	IR-8060	191	C158	
MP0014	SEAT	3981593	VKBA310	R158.14	IR-8060	191	C158	
MP0014	SEAT	SE028160302A	VKBA310	R158.14	IR-8060	191	C158	
MP0015	FIAT/LANCIA	82377953				314	CR1746	
MP0015	FIAT/LANCIA	7617175				314	CR1746	
MP0016	ZASTAVA	1612961				316		
MP0017	FIAT	4459689		R157.27		302	CR1750	
MP0018	AUTOBIANCHI	5963034	VKBA1443	R158.29		189		
MP0018	FIAT	7538260	VKBA1443	R158.29		189		
MP0019	FIAT	5927842				192		
MP0020	FIAT/LANCIA	7634577				351	CR1754	
MP0020	FIAT/LANCIA	7591328				351	CR1754	
MP0020	FIAT/LANCIA	4390949				351	CR1754	
MP0021	FIAT/LANCIA	7608131				352	CR1779	
MP0022	ALFA	7645817				232	CR1781	
MP0022	ALFA	60800548				232	CR1781	
MP0022	ALFA	60801750				232	CR1781	
MP0022	FIAT	82433787				232	CR1781	
MP0022	FIAT	82390272				232	CR1781	
MP0022	FIAT	60751504				232	CR1781	
MP0022	FIAT	7595521				232	CR1781	

MOZZI RUOTA
AXEL SHAFTS BEARING
MOYEUX ROUE
LISTA DI COMPARAZIONE - CROSS REFERENCES - LISTE CORRISPONDANCE

CORAM	APPLICAZIONE	RIF. ORIGINALE	SKF	SNR	IRB	OMCAR	LORETT	NOTE
MP0022	FIAT/LANCIA	7667265				232	CR1781	
MP0023	AUTOBIANCHI	7578589				350		
MP0023	FIAT	7578589				350	CR1751	
MP0023	FIAT	4399039				350	CR1751	
MP0023	FIAT/LANCIA	4260431				350	CR1751	
MP0023	FIAT/LANCIA	4399777				350	CR1751	
MP0024	FIAT/LANCIA	7634578				353	CR1822	
MP0024	FIAT/LANCIA	7643294				353	CR1822	
MP0024	FIAT/LANCIA	7641577				353	CR1822	
MP0025	FIAT	7641450				355		
MP0026	FIAT/LANCIA	82438592		R158.26		311	CR1769	
MP0027	ALFA/FIAT	60809985	VKBA1440	R158.22	IR-8505	312	C198	
MP0027	ALFA/FIAT	7750120	VKBA1440	R158.22	IR-8505	312	C198	
MP0027	ALFA/FIAT	60812195	VKBA1440	R158.22	IR-8505	312	C198	
MP0027	ALFA/FIAT	46453887	VKBA1440	R158.22	IR-8505	312	C198	
MP0027	ALFA/FIAT	7603679	VKBA1440	R158.22	IR-8505	312	C198	
MP0027	FIAT	7645817	VKBA1440	R158.22	IR-8505	312	C198	
MP0027	FIAT	46554135	VKBA1440	R158.22	IR-8505	312	C198	
MP0028	FIAT/LANCIA	82403117	VKBA1303	R158.20	IR-8098	305	C187	
MP0028	FIAT/LANCIA	60808829	633555	R158.20	IR-8098	305	C187	
MP0028	LANCIA	60751141	633555	R158.20	IR-8098	305	C187	
MP0028	LANCIA	60751816	633555	R158.20	IR-8098	305	C187	
MP0028	LANCIA	82400997	633555	R158.20	IR-8098	305	C187	
MP0029	ALFA	7732410	VKBA1441	R158.21	K-34/24	313	C201	
MP0029	ALFA	46425959	VKBA1441	R158.21	K-34/24	313	C201	
MP0029	ALFA	60806445	VKBA1441	R158.21	K-34/24	313	C201	
MP0029	FIAT	60809721	VKBA1441	R158.21	K-34/24	313	C201	
MP0029	FIAT	7613514	VKBA1441	R158.21	K-34/24	313	C201	
MP0029	FIAT	60811481	VKBA1441	R158.21	K-34/24	313	C201	
MP0030	FIAT/LANCIA	82400997	VKBA1304	R158.19		306	C186	
MP0030	FIAT/LANCIA	60807234	VKBA1304	R158.19		306	C186	
MP0030	FIAT/LANCIA	82469083	VKBA1304	R158.19		306	C186	
MP0031	ALFA	82441470	VKBA1476	R158.33		307	C191	
MP0031	ALFA /FIAT/LANCIA	82462175	VKBA1476	R158.33		307	C191	
MP0031	ALFA /FIAT/LANCIA	60808903	VKBA1476	R158.33		307	C191	
MP0032	FIAT/LANCIA	7603485	VKBA940	R158.17	K-36/38	310		
MP0033	ALFA/FIAT	7750120	VKBA1440	R158.22	IR-8505	312	C198	
MP0033	ALFA/FIAT	60812195	VKBA1440	R158.22	IR-8505	312	C198	
MP0033	ALFA/FIAT	46453887	VKBA1440	R158.22	IR-8505	312	C198	
MP0033	ALFA/FIAT	7603679	VKBA1440	R158.22	IR-8505	312	C198	
MP0033	FIAT	7787124	VKBA1440	R158.22	IR-8505	312	C198	
MP0033	FIAT	7645817	VKBA1440	R158.22	IR-8505	312	C198	
MP0033	FIAT	46554135	VKBA1440	R158.22	IR-8505	312	C198	
MP0034	CITROËN/PEUGEOT	330765				280	CR1948	
MP0034	FIAT	1300472080				280	CR1948	
MP0034	FIAT	1300472080				280	CR1951	
MP0035	CITROËN/PEUGEOT	330766				281	CR1953	
MP0035	FIAT	1307355080				281	CR1953	
MP0039	ALFA	60501373				230	CR1715	
MP0040	ALFA	60559321				231	CR1716	
MP0041	AUDI/VOLKSWAGEN	823407615A				198	CR1701	
MP0042	AUDI	893407615A				199	CR1702	
MP0043	AUDI	893407615B				202	CR1940	
MP0043	AUDI	8A0407615				202	CR1940	
MP0044	AUDI	443407615A				205	CR1942	
MP0045	AUDI	893407615D				204	CR1700	

MOZZI RUOTA
AXEL SHAFTS BEARING
MOYEUX ROUE
LISTA DI COMPARAZIONE - CROSS REFERENCES - LISTE CORRISPONDANCE

CORAM	APPLICAZIONE	RIF. ORIGINALE	SKF	SNR	IRB	OMCAR	LORETT	NOTE
MP0045	AUDI	8A0407615C				204		
MP0046	AUDI/VOLKSWAGEN	357501117A				203	CR1705	
MP0047	VOLKSWAGEN	861407615A				201	CR1939	
MP0048	VOLKSWAGEN	175407615				195	CR1706	
MP0049	VOLKSWAGEN	191407615				196	CR1707	
MP0050	SEAT/VOLKSWAGEN	357407615				197	CR1708	
MP0051	SEAT/VOLKSWAGEN	357407615A				200	CR1709	
MP0056	FORD	1644842				250	CR1721	
MP0057	FORD	6517014				251	CR1722	
MP0058	FORD	1146119				252	CR1789	
MP0058	FORD	3903036				252	CR1789	
MP0058	FORD	6517013				252	CR1789	
MP0060	LADA	21213103012				240	CR1917	
MP0060	LADA	21213103014				240	CR1917	
MP0061	LADA	21083103012				241	CR1918	
MP0065	OPEL	326169				270	CR1710	
MP0065	OPEL	326168				270	CR1710	
MP0065	OPEL	326178				270	CR1710	
MP0065	OPEL	326197				270	CR1710	
MP0066	OPEL	326173				271	CR1711	
MP0066	OPEL	326184				271	CR1711	
MP0069	PEUGEOT	330749				210	CR1712	
MP0073	RENAULT	7700628767				222	CR1713	
MP0074	RENAULT	7700719140				220	CR1714	
MP0075	RENAULT	7700768318				221		
MP0075	RENAULT	7700768319				221	CR1931	
MP0076	RENAULT	7700715149				223	CR1957	
MP0077	RENAULT	7700308572		TGB12095S43	IR-8106			
MP0077	RENAULT	7700787639		TGB12095S43	IR-8106		C576	
MP0077	RENAULT	7700803928		TGB12095S43	IR-8106		C576	
MP0077	RENAULT	7700809185		TGB12095S43	IR-8106		C576	
MP0077	RENAULT	7704002262		TGB12095S43	IR-8106		C576	
MP0078	FIAT	7746191				315		
MP0079	ALFA	60545087				360		
MP0079	FIAT/LANCIA	60809805				360		
MP0080	ALFA	60812057	VKBA3442	R158.39		318		
MP0080	FIAT/LANCIA	7769902	VKBA3442	R158.39		318	C219	
MP0081	ALFA	60563372				357		
MP0081	ALFA	60653528				357		
MP0081	LANCIA	60563372				357		
MP0081	LANCIA	60653528				357		
MP0081	LANCIA	60816898				357		
MP0082	ALFA	60510369				356		
MP0082	ALFA	60510367				356		
MP0083	ALFA	60510129	VKBA1449	R160.16		308		
MP0084	ALFA	60568138	VKBA3436	R160.22		321		
MP0085	ALFA	60801644	VKBA1450	R160.17		309		
MP0085	ALFA	82469109	VKBA1450	R160.17		309		
MP0086	ALFA	60811032				233		
MP0086	ALFA	82466910				233		
MP0087	ALFA	60613615	VKBA3459			319		
MP0088	AUDI/SEAT/VOLKSWAGEN	357501117				208		
MP0089	AUDI	4A0407615F				194		
MP0089	AUDI	4A0407615D				194		
MP0090	AUDI/SKODA/VOLKSWAGEN	1J0501477A	VKBA3456		K-02/13	269		
MP0090	AUDI/SKODA/VOLKSWAGEN	1J0598477	VKBA3456		K-02/13	269		solo mozzo ruota

MOZZI RUOTA
AXEL SHAFTS BEARING
MOYEUX ROUE
LISTA DI COMPARAZIONE - CROSS REFERENCES - LISTE CORRISPONDANCE

CORAM	APPLICAZIONE	RIF. ORIGINALE	SKF	SNR	IRB	OMCAR	LORETT	NOTE
MP0091	AUDI/VOLKSWAGEN	8D0407615B				265		
MP0091	AUDI/VOLKSWAGEN	8D0407615D				265		
MP0091	AUDI/VOLKSWAGEN	8D0407615E				265		
MP0092	BMW	31221139345	VKBA1458	R150.22	IR-8591	349	C382	
MP0093	BMW	31211131297	VKBA890	R150.15	IR-8508	370	CR2114	
MP0093	BMW	31211131297	VKBA938	R150.17	IR-8508	370	CR2114	
MP0094	BMW	33411131118				348		
MP0095	CITROËN	330774				211		
MP0095	PEUGEOT	330762				211	CR1943	
MP0096	CITROËN/PEUGEOT	330769				212	CR1944	
MP0096	CITROËN/PEUGEOT	330771				212	CR1944	
MP0096	CITROËN/PEUGEOT	330772				212	CR1944	
MP0097	CITROËN	330764				214	CR1946	
MP0097	CITROEN/LANCIA	1311508080				214	CR1946	
MP0098	CITROËN/PEUGEOT	330776				215	CR1949	
MP0099	CITROËN	330775				216		
MP0100	CITROËN	374830	VKBA1411	R166.21	K-07/21	217		
MP0101	ALFA	60809668				371		
MP0101	FIAT/LANCIA	82463292				371		
MP0102	FIAT	7522385				359		
MP0102	FIAT	46798592				359		
MP0103	FIAT	46447445				358	CR1777	
MP0103	FIAT	82491391				358	CR1777	
MP0104	FIAT	7717348				317		
MP0105	FIAT	7569715				278	CR1752	
MP0106	FIAT	7657422				279	CR1824	
MP0107	FORD	5027622	VKBA1482	R152.44	K-11/27	256	CR2681	
MP0108	FORD	1078709				253		
MP0108	FORD	1121342				253		
MP0108	FORD	7201007				253		
MP0109	FORD	7346525				254	CR1927	
MP0110	FORD	5027621	VKBA1481	R152.43	K-11/26	255	CR2680	
MP0111	HYUNDAI	5175024500				323		
MP0112	HYUNDAI	5175029000				324		
MP0113	HYUNDAI	5175029100				325		
MP0114	HONDA	44600-SM4-020				335		
MP0115	HONDA	44600-SO4-980				336		
MP0116	HONDA	44600-SO4-A00				337		
MP0117	HONDA	44600-ST3-E00				338		
MP0118	ALFA	60809668				371		
MP0118	FIAT/LANCIA	82463292				371		
MP0119	MERCEDES-BENZ	2013571708				346		
MP0120	MERCEDES-BENZ	1243574608				347		
MP0121	NISSAN	402020M010				326		
MP0122	NISSAN	402024F100				327		
MP0123	NISSAN	402024F105				328		
MP0124	NISSAN	4020290J00				329		
MP0125	NISSAN	402022F000				330		
MP0126	OPEL	326185				272		
MP0127	OPEL	326194				274		
MP0128	OPEL	326196				273	CR1956	
MP0129	OPEL	1604004	VKBA3422	R153.22		276		
MP0129	OPEL	1604307	VKBA3422	R153.22		276		
MP0129	OPEL	90468191	VKBA3422	R153.22		276		
MP0129	OPEL	421006	VKBA3422	R153.22		276		
MP0129	OPEL	1604303	VKBA3422	R153.22		276		

MOZZI RUOTA
AXEL SHAFTS BEARING
MOYEUX ROUE
LISTA DI COMPARAZIONE - CROSS REFERENCES - LISTE CORRISPONDANCE

CORAM	APPLICAZIONE	RIF. ORIGINALE	SKF	SNR	IRB	OMCAR	LORETT	NOTE
MP0129	OPEL	90511494	VKBA3422	R153.22		276		
MP0129	OPEL	90540262	VKBA3422	R153.22		276		
MP0130	OPEL	326195				275		
MP0131	RENAULT	7701204667	VKBA967	R155.25	K-29/32	320		
MP0131	RENAULT	7701204692	VKBA968	R155.39	K-29/32	320		
MP0131	RENAULT	7701204667	VKBA3438	R155.40	K-29/32	320		
MP0131	RENAULT	7701204692	VKBA3439	R155.41	K-29/32	320		
MP0131	RENAULT	7700803928	VKBA3439	R155.41	K-29/32	320		
MP0132	RENAULT	7700830220				224		
MP0133	RENAULT	7700415121				225		
MP0134	ROVER	EJP7459				333		
MP0135	ROVER	RUB101250				334		
MP0136	SAAB	8947384	VKBA746	R164.07		339		
MP0136	SAAB	8947384	VKBA943	R164.09		339		
MP0137	SAAB	8952996	VKBA913	R164.10		341		
MP0137	SAAB	8993875	VKBA913	R164.10		341		
MP0137	SAAB	8993883	VKBA913	R164.10		341		
MP0137	SAAB	8993891	VKBA913	R164.10		341		
MP0137	SAAB	8993909	VKBA913	R164.10		341		
MP0138	SAAB	8971095	VKBA914	R164.11		340		
MP0139	SEAT/VOLKSWAGEN	333501117A				379		
MP0140	SEAT/VOLKSWAGEN	191501118C				380		
MP0140	SEAT/VOLKSWAGEN	333501118A				380		
MP0141	SEAT	191501118D				381		
MP0141	SEAT/VOLKSWAGEN	333501118				381		
MP0142	SEAT/VOLKSWAGEN	191501117A				382		
MP0142	SEAT/VOLKSWAGEN	333501117				382		
MP0143	SEAT	SE138140304A				322		
MP0144	SEAT/VOLKSWAGEN	357407613B				206		
MP0145	SKODA	115430010				260		
MP0146	SKODA	115430011				261		
MP0146	SKODA	6U0407615A				261		
MP0147	TOYOTA	4350220131				331		
MP0148	TOYOTA	4350212090				332		
MP0149	VOLKSWAGEN	1H0407613B				209		
MP0150	AUDI/VOLKSWAGEN	1J0407613G				266		
MP0150	AUDI/VOLKSWAGEN	1J0407613C				266		
MP0151	SEAT/VOLKSWAGEN	6X0501477				267		
MP0151	SEAT	6X0598477				267		
MP0152	VOLKSWAGEN	6N0407613				207	CR1958	
MP0153	VOLKSWAGEN	7M0501655				268		
MP0153	SEAT	7M0501655				268		
MP0153	SEAT	7M0501655A				268		
MP0153	SEAT	7M0501655B				268		
MP0153	SEAT	7M0501655D				268		
MP0154	VOLVO	3455827				342		
MP0155	VOLVO	3472719	VKBA1436	R165.10		343		
MP0156	VOLVO		VKBA1437	R165.15		376	CR2662	
MP0157	VOLVO	271394	VKBA1313	R165.12		372	CR2234	
MP0158	VOLVO	271449	VKBA1434	R165.13		378		
MP0158	VOLVO	271645	VKBA1434	R165.13		378	CR2236	
MP0159	VOLVO	1359818	VKBA1435	R165.14		344		
MP0160	VOLVO	271585	VKBA3471	R165.18	K-40/22	373		
MP0160	VOLVO	271589	VKBA3471	R165.18	K-40/22	373	CR2255	
MP0161	VOLVO	271786	VKBA3415	R165.17	K-40/18	374	CR2256	
MP0161	VOLVO	271786	VKBA3488	R165.17	K-40/18	374	CR2256	

MOZZI RUOTA
AXEL SHAFTS BEARING
MOYEUX ROUE
LISTA DI COMPARAZIONE - CROSS REFERENCES - LISTE CORRISPONDANCE

CORAM	APPLICAZIONE	RIF. ORIGINALE	SKF	SNR	IRB	OMCAR	LORETT	NOTE
MP0162	VOLVO	271905	VKBA3425		K-40/19	375	CR2257	
MP0163	VOLVO	30855922				345		
MP0164	RENAULT	7700830220				226		
MP0165	ALFA	60815429	BAF0040			423	C256	
MP0165	ALFA/FIAT	46519901	BAF0040			423	C256	
MP0165	LANCIA	46519901	BAF0040			423	C256	
MP0165	FIAT	46512973	BAF0040			423	C256	
MP0165	LANCIA	46512973	BAF0040			423	C256	
MP0166	ALFA	60652014	BAF0049	R16026		426	C259	
MP0167	ALFA	60815160				404	CR1955	
MP0167	ALFA	7788206				404	CR1955	
MP0167	LANCIA	60815160				404	CR1955	
MP0167	LANCIA	7788206				404	CR1955	
MP0168	AUDI/VOLKSWAGEN	4A0501117A				383		
MP0168	AUDI/VOLKSWAGEN	8D0501117C				383		
MP0169	AUDI	6E0598611	VKBA3549	R15451		427	CR2567	
MP0170	AUDI/SEAT/SKODA	6Q0407621AH	VKBA3569	R15732		418		
MP0170	AUDI/SEAT/SKODA	6Q0407621AJ	VKBA3569	R15732		418		
MP0171	AUDI/SKODA/VOLKSWAGEN	6Q0598611	VKBA3567	R15731		419	CR2558	
MP0172	AUDI	1T0498621	VKBA3643			420		
MP0172	SEAT/VOLKSWAGEN	1T0498621	VKBA3643			420		
MP0173	AUDI	1K0501611E				428		
MP0173	AUDI	1K0598611				428		solo mozzo ruota
MP0173	SEAT	1K0501611E				428		
MP0173	SEAT	1K0598611				428		solo mozzo ruota
MP0174	BMW	33411093567				384		
MP0175	CHRYSLER	4641517	BARB636109E	R18601		385		
MP0175	CHRYSLER	4641517AD	BARB636109E	R18601		385		
MP0175	DODGE	4641517				385		
MP0175	DODGE	4641517AD				385		
MP0176	CITROËN	374828	VKBA3477	R15937		410	CR2667	solo mozzo ruota
MP0176	CITROËN/PEUGEOT	374843	VKBA3477	R15937		410	CR2667	solo mozzo ruota
MP0177	CITROËN	374836	VKBA3482	R15933		409		solo mozzo ruota
MP0177	CITROËN	374844	VKBA3482	R15933		409		solo mozzo ruota
MP0178	CITROËN/PEUGEOT	335028	VKBA3424	R15932	IR8619	425	C222	solo mozzo ruota
MP0178	FIAT/LANCIA	1473543080	VKBA3424	R15932	IR8619	425	C222	solo mozzo ruota
MP0178	FIAT/LANCIA	71714474	VKBA3424	R15932	IR8619	425	C222	solo mozzo ruota
MP0178	FIAT/LANCIA	9567217780	VKBA3424	R15932	IR8619	425	C222	solo mozzo ruota
MP0179	CITROËN	374829	VKBA3478	R16623		411	CR2575	solo mozzo ruota
MP0180	FIAT	46554135	VKBA3583	R15823		424	C443	
MP0181	FIAT	46745258				432		
MP0182	FIAT	1328045080				405		
MP0183	FIAT	1328053080				431		
MP0184	FORD	4103347				386		
MP0185	MERCEDES-BENZ	1683370345				413		
MP0186	MERCEDES-BENZ	1683500035				387		
MP0186	MERCEDES-BENZ	1683500335				387		
MP0187	MERCEDES-BENZ	1683500435				388		
MP0188	MERCEDES-BENZ	2103300325				414		
MP0189	MERCEDES-BENZ	2033570008				389		
MP0190	MERCEDES-BENZ	2113570308				390		
MP0191	MINI	33416756830				421		
MP0192	MINI	31226756889				422		
MP0193	NISSAN	402024M400				391		
MP0194	NISSAN	40204AX600				417		
MP0194	NISSAN	82000046549				417		

MOZZI RUOTA
AXEL SHAFTS BEARING
MOYEUX ROUE
LISTA DI COMPARAZIONE - CROSS REFERENCES - LISTE CORRISPONDANCE

CORAM	APPLICAZIONE	RIF. ORIGINALE	SKF	SNR	IRB	OMCAR	LORETT	NOTE
MP0195	OPEL	4707270				415		
MP0196	OPEL	4707271				416		
MP0197	OPEL	1603208	BAR0048	R15331		393		
MP0198	OPEL	1603210	BAR0053B	R15330		394		
MP0199	OPEL	1604005	VKBA3514	R15334		395		
MP0200	OPEL	326001				392		
MP0201	PEUGEOT	374835	VKBA3454	R15936		412		
MP0202	RENAULT	7700840156				396		
MP0203	RENAULT	8200003026				397		
MP0204	RENAULT	7701205170	VKBA3491	R15556		406		
MP0205	ROVER	RFB000170				398		
MP0205	ROVER	EFP7567				398		
MP0206	SAAB	4107462	VKBA1408	R16413		377	C533	
MP0207	SEAT/VOLKSWAGEN	6K9501477		R18261		408		
MP0208	SMART	1870V021000000				399		
MP0209	SMART	2072V009000000	BAR0051			400		
MP0210	TOYOTA	4350205020				401		
MP0210	TOYOTA	4350205021				401		
MP0210	TOYOTA	4350232080				401		
MP0211	TOYOTA	4350202021				402		
MP0212	TOYOTA	4241052020	VKBA3930			407		
MP0212	TOYOTA	4241052021	VKBA3930			407		
MP0213	TOYOTA	435020D010				403		
MP0213	TOYOTA	4350252010				403		
MP0214	LADA							
MP0215	CITROËN/PEUGEOT	3701.42	BAFB444450BB	TGB12894			C405	
MP0215	CITROËN/PEUGEOT	95496146	BAFB444450BB	TGB12894			C405	
MP0215	CITROËN/PEUGEOT	9558882680	BAFB444450BB	TGB12894			C405	

MOZZI RUOTA
AXEL SHAFTS BEARING
MOYEUX ROUE
LISTA DI COMPARAZIONE - CROSS REFERENCES - LISTE CORRISPONDANCE

ALFA ROMEO	CORAM
7603679	MP0027
7603679	MP0033
7645817	MP0022
7732410	MP0029
7750120	MP0027
7750120	MP0033
7788206	MP0167
46425959	MP0029
46453887	MP0027
46453887	MP0033
46519901	MP0165
60501373	MP0039
60510129	MP0083
60510367	MP0082
60510369	MP0082
60545087	MP0079
60559321	MP0040
60563372	MP0081
60568138	MP0084
60613615	MP0087
60652014	MP0166
60653528	MP0081
60800548	MP0022
60801644	MP0085
60801750	MP0022
60806445	MP0029
60808903	MP0031
60809668	MP0101
60809668	MP0118
60809985	MP0027
60811032	MP0086
60812057	MP0080
60812195	MP0027
60812195	MP0033
60815160	MP0167
60815429	MP0165
82441470	MP0031
82462175	MP0031
82466910	MP0086
82469109	MP0085

AUDI	CORAM
357501117	MP0088
1J0407613C	MP0150
1J0407613G	MP0150
1J0501477A	MP0090
1J0598477	MP0090
1K0501611E	MP0173
1K0598611	MP0173
1T0498621	MP0172
357501117A	MP0046
443407615A	MP0044
4A0407615D	MP0089
4A0407615F	MP0089
4A0501117A	MP0168
6E0598611	MP0169
6Q0407621AH	MP0170
6Q0407621AJ	MP0170
6Q0598611	MP0171
823407615A	MP0041
893407615A	MP0042
893407615B	MP0043
893407615D	MP0045
8A0407615	MP0043
8A0407615C	MP0045
8D0407615B	MP0091
8D0407615D	MP0091
8D0407615E	MP0091
8D0501117C	MP0168

AUTOBIANCHI	CORAM
4214408	MP0001
4260431	MP0003
4267990	MP0001
4341664	MP0001
4379767	MP0002
4399777	MP0003
4399856	MP0002
4400918	MP0006
5948422	MP0002
5963034	MP0018
7578589	MP0003
7578589	MP0023

BMW	CORAM
31211131297	MP0093
31211131297	MP0093
31221139345	MP0092
33411093567	MP0174
33411131118	MP0094

CHRYSLER	CORAM
4641517	MP0175
4641517AD	MP0175

CITROËN	CORAM
3701.42	MP0215
330764	MP0097
330765	MP0034
330766	MP0035
330769	MP0096
330771	MP0096
330772	MP0096
330774	MP0095
330775	MP0099
330776	MP0098
335028	MP0178
374828	MP0176
374829	MP0179
374830	MP0100
374836	MP0177
374843	MP0176
374844	MP0177
95496146	MP0215
1311508080	MP0097
9558882680	MP0215

DODGE	CORAM
4641517	MP0175
4641517AD	MP0175

FIAT	CORAM
4214408	MP0001
4260431	MP0003
4260431	MP0023
4267990	MP0001
4340061	MP0001
4341664	MP0001
4344535	MP0002
4381043	MP0002
4390949	MP0007
4390949	MP0020
4399039	MP0003
4399039	MP0023
4399777	MP0003
4399777	MP0023
4400918	MP0006
4400919	MP0014
4400919	MP0014
4459689	MP0017
5888279	MP0001
5888279	MP0001
5927842	MP0019
5955456	MP0008
7522385	MP0102
7538260	MP0018
7569715	MP0105
7578589	MP0003
7578589	MP0023
7591328	MP0007
7591328	MP0020
7595521	MP0022
7599461	MP0002
7599661	MP0002
7603485	MP0032
7603679	MP0027
7603679	MP0033
7608131	MP0021
7613514	MP0029
7617175	MP0015
7634577	MP0007
7634577	MP0020
7634578	MP0024
7641450	MP0025
7641577	MP0024
7643294	MP0024
7645817	MP0027
7645817	MP0033
7657422	MP0106
7667265	MP0022
7717348	MP0104
7746191	MP0078
7750120	MP0027
7750120	MP0033
7769902	MP0080
7787124	MP0033
46447445	MP0103
46453887	MP0027
46453887	MP0033
46512973	MP0165
46519901	MP0165
46554135	MP0027
46554135	MP0033
46554135	MP0180
46745258	MP0181
46798592	MP0102
60751504	MP0022

5

MOZZI RUOTA
AXEL SHAFTS BEARING
MOYEUX ROUE
LISTA DI COMPARAZIONE - CROSS REFERENCES - LISTE CORRISPONDANCE

60807234	**MP0030**
60808829	**MP0028**
60808903	**MP0031**
60809721	**MP0029**
60809805	**MP0079**
60809985	**MP0027**
60811481	**MP0029**
60812195	**MP0027**
60812195	**MP0033**
71714474	**MP0178**
82377953	**MP0015**
82390272	**MP0022**
82400997	**MP0030**
82403117	**MP0028**
82433787	**MP0022**
82438592	**MP0026**
82462175	**MP0031**
82463292	**MP0101**
82463292	**MP0118**
82469083	**MP0030**
82491391	**MP0103**
1300472080	**MP0034**
1307355080	**MP0035**
1328045080	**MP0182**
1328053080	**MP0183**
1473543080	**MP0178**
9567217780	**MP0178**

FORD	**CORAM**
1078709	**MP0108**
1121342	**MP0108**
1146119	**MP0058**
1644842	**MP0056**
3903036	**MP0058**
4103347	**MP0184**
5027621	**MP0110**
5027622	**MP0107**
6517013	**MP0058**
6517014	**MP0057**
7201007	**MP0108**
7346525	**MP0109**

HONDA	**CORAM**
44600-SM4-020	**MP0114**
44600-SO4-980	**MP0115**
44600-SO4-A00	**MP0116**
44600-ST3-E00	**MP0117**

HYUNDAI	**CORAM**
5175024500	**MP0111**
5175029000	**MP0112**
5175029100	**MP0113**

LADA	**CORAM**
21083103012	**MP0061**
21213103012	**MP0060**
21213103014	**MP0060**

LANCIA	**CORAM**
4260431	**MP0003**
4260431	**MP0023**
4340061	**MP0001**
4344535	**MP0002**
4381043	**MP0002**
4390949	**MP0007**
4390949	**MP0020**
4399777	**MP0003**
4399777	**MP0023**
4400918	**MP0006**
5888279	**MP0001**
5888279	**MP0001**
5955456	**MP0008**
7591328	**MP0007**
7591328	**MP0020**
7599461	**MP0002**
7599661	**MP0002**
7603485	**MP0032**
7608131	**MP0021**
7617175	**MP0015**
7634577	**MP0007**
7634577	**MP0020**
7634578	**MP0024**
7641577	**MP0024**
7643294	**MP0024**
7667265	**MP0022**
7769902	**MP0080**
7788206	**MP0167**
46512973	**MP0165**
46519901	**MP0165**
60563372	**MP0081**
60653528	**MP0081**
60751141	**MP0028**
60751816	**MP0028**
60807234	**MP0030**
60808829	**MP0028**
60808903	**MP0031**
60809805	**MP0079**
60815160	**MP0167**
60816898	**MP0081**
71714474	**MP0178**
82377953	**MP0015**
82400997	**MP0028**
82400997	**MP0030**
82403117	**MP0028**
82438592	**MP0026**
82462175	**MP0031**
82463292	**MP0101**
82463292	**MP0118**
82469083	**MP0030**
1311508080	**MP0097**
1473543080	**MP0178**
9567217780	**MP0178**

MERCEDES-BENZ	**CORAM**
1243574608	**MP0120**
1683370345	**MP0185**
1683500035	**MP0186**
1683500335	**MP0186**
1683500435	**MP0187**
2013571708	**MP0119**
2033570008	**MP0189**
2103300325	**MP0188**
2113570308	**MP0190**

MINI	**CORAM**
31226756889	**MP0192**
33416756830	**MP0191**

NISSAN	**CORAM**
82000046549	**MP0194**
402020M010	**MP0121**
402022F000	**MP0125**
402024F100	**MP0122**
402024F105	**MP0123**
402024M400	**MP0193**
4020290J00	**MP0124**
40204AX600	**MP0194**

OPEL	**CORAM**
326001	**MP0200**
326168	**MP0065**
326169	**MP0065**
326173	**MP0066**
326178	**MP0065**
326184	**MP0066**
326185	**MP0126**
326194	**MP0127**
326195	**MP0130**
326196	**MP0128**
326197	**MP0065**
421006	**MP0129**
1603208	**MP0197**
1603210	**MP0198**
1604004	**MP0129**
1604005	**MP0199**
1604303	**MP0129**
1604307	**MP0129**
4707270	**MP0195**
4707271	**MP0196**
90468191	**MP0129**
90511494	**MP0129**
90540262	**MP0129**

PEUGEOT	**CORAM**
3701.42	**MP0215**
330749	**MP0069**
330762	**MP0095**
330765	**MP0034**
330766	**MP0035**
330769	**MP0096**
330771	**MP0096**
330772	**MP0096**
330776	**MP0098**
335028	**MP0178**
374835	**MP0201**
374843	**MP0176**
95496146	**MP0215**
9558882680	**MP0215**

MOZZI RUOTA
AXEL SHAFTS BEARING
MOYEUX ROUE
LISTA DI COMPARAZIONE - CROSS REFERENCES - LISTE CORRISPONDANCE

RENAULT	CORAM
7700308572	MP0077
7700415121	MP0133
7700628767	MP0073
7700715149	MP0076
7700719140	MP0074
7700768318	MP0075
7700768319	MP0075
7700787639	MP0077
7700803928	MP0077
7700803928	MP0131
7700809185	MP0077
7700830220	MP0132
7700830220	MP0164
7700840156	MP0202
7701204667	MP0131
7701204667	MP0131
7701204692	MP0131
7701204692	MP0131
7701205170	MP0204
7704002262	MP0077
8200003026	MP0203

ROVER	CORAM
EFP7567	MP0205
EJP7459	MP0134
RFB000170	MP0205
RUB101250	MP0135

SAAB	CORAM
3981594	MP0002
4107462	MP0206
8947384	MP0136
8947384	MP0136
8952996	MP0137
8971095	MP0138
8993875	MP0137
8993883	MP0137
8993891	MP0137
8993909	MP0137
595948422	MP0002
SE021149002A	MP0002

SEAT	CORAM
3981586	MP0006
3981593	MP0014
3981594	MP0002
333501117	MP0142
333501118	MP0141
357407615	MP0050
357501117	MP0088
191501117A	MP0142
191501118C	MP0140
191501118D	MP0141
1K0501611E	MP0173
1K0598611	MP0173
1T0498621	MP0172
333501117A	MP0139
333501118A	MP0140
357407613B	MP0144
357407615A	MP0051
6K9501477	MP0207
6Q0407621AH	MP0170
6Q0407621AJ	MP0170
6X0501477	MP0151
6X0598477	MP0151
7M0501655	MP0153
7M0501655A	MP0153
7M0501655B	MP0153
7M0501655D	MP0153
SE021149002A	MP0002
SE028140301A	MP0006
SE028160302A	MP0014
SE138140304A	MP0143

SKODA	CORAM
115430010	MP0145
115430011	MP0146
1J0501477A	MP0090
1J0598477	MP0090
6Q0407621AH	MP0170
6Q0407621AJ	MP0170
6Q0598611	MP0171
6U0407615A	MP0146

SMART	CORAM
1870V021000000	MP0208
2072V009000000	MP0209

TOYOTA	CORAM
4241052020	MP0212
4241052021	MP0212
4350202021	MP0211
4350205020	MP0210
4350205021	MP0210
4350212090	MP0148
4350220131	MP0147
4350232080	MP0210
4350252010	MP0213
435020D010	MP0213

VOLKSWAGEN	CORAM
175407615	MP0048
191407615	MP0049
333501117	MP0142
333501118	MP0141
357407615	MP0050
357501117	MP0088
191501117A	MP0142
191501118C	MP0140
1H0407613B	MP0149
1J0407613C	MP0150
1J0407613G	MP0150
1J0501477A	MP0090
1J0598477	MP0090
1T0498621	MP0172
333501117A	MP0139
333501118A	MP0140
357407613B	MP0144
357407615A	MP0051
357501117A	MP0046
4A0501117A	MP0168
6K9501477	MP0207
6N0407613	MP0152
6Q0598611	MP0171
6X0501477	MP0151
7M0501655	MP0153
823407615A	MP0041
861407615A	MP0047
8D0407615B	MP0091
8D0407615D	MP0091
8D0407615E	MP0091
8D0501117C	MP0168

VOLVO	CORAM
271394	MP0157
271449	MP0158
271585	MP0160
271589	MP0160
271645	MP0158
271786	MP0161
271786	MP0161
271905	MP0162
1359818	MP0159
3455827	MP0154
3472719	MP0155
30855922	MP0163

ZASTAVA	CORAM
1612961	MP0016
4344535	MP0002
4379767	MP0002
4381043	MP0002
4399856	MP0002
5948422	MP0002
7599461	MP0002

MOZZI RUOTA
AXEL SHAFTS BEARING
MOYEUX ROUE
LISTA DI COMPARAZIONE - CROSS REFERENCES - LISTE CORRISPONDANCE

IRB	CORAM
IR-8059	MP0006
IR-8060	MP0014
IR-8098	MP0028
IR-8106	MP0077
IR-8505	MP0027
IR-8505	MP0033
IR-8508	MP0093
IR-8591	MP0092
IR8619	MP0178
K-02/13	MP0090
K-07/21	MP0100
K-11/26	MP0110
K-11/27	MP0107
K-29/32	MP0131
K-30/32	MP0001
K-34/24	MP0029
K-36/38	MP0002
K-40/18	MP0161
K-40/19	MP0162
K-40/22	MP0160

LORETT	CORAM
C148	MP0001
C157	MP0006
C158	MP0014
C186	MP0030
C187	MP0028
C190	MP0002
C191	MP0031
C198	MP0027
C198	MP0033
C201	MP0029
C219	MP0080
C222	MP0178
C256	MP0165
C259	MP0166
C382	MP0092
C405	MP0215
C443	MP0180
C533	MP0206
C576	MP0077
CR1700	MP0045
CR1701	MP0041
CR1702	MP0042
CR1705	MP0046
CR1706	MP0048
CR1707	MP0049
CR1708	MP0050
CR1709	MP0051
CR1710	MP0065
CR1711	MP0066
CR1712	MP0069
CR1713	MP0073
CR1714	MP0074
CR1715	MP0039
CR1716	MP0040
CR1721	MP0056
CR1722	MP0057
CR1743	MP0008
CR1746	MP0015
CR1750	MP0017
CR1751	MP0003
CR1752	MP0105
CR1754	MP0007
CR1754	MP0020
CR1769	MP0026
CR1777	MP0103
CR1779	MP0021
CR1781	MP0022
CR1789	MP0058
CR1822	MP0024
CR1824	MP0106
CR1917	MP0060
CR1918	MP0061
CR1927	MP0109
CR1931	MP0075
CR1939	MP0047
CR1940	MP0043
CR1942	MP0044
CR1943	MP0095
CR1944	MP0096
CR1946	MP0097
CR1948	MP0034
CR1949	MP0098
CR1951	MP0034
CR1953	MP0035
CR1955	MP0167
CR1956	MP0128
CR1957	MP0076
CR1958	MP0152
CR2114	MP0093
CR2234	MP0157
CR2236	MP0158
CR2255	MP0160
CR2256	MP0161
CR2257	MP0162
CR2558	MP0171
CR2567	MP0169
CR2575	MP0179
CR2662	MP0156
CR2667	MP0176
CR2680	MP0110
CR2681	MP0107

OMCAR	CORAM
189	MP0018
190	MP0006
191	MP0014
192	MP0019
194	MP0089
195	MP0048
196	MP0049
197	MP0050
198	MP0041
199	MP0042
200	MP0051
201	MP0047
202	MP0043
203	MP0046
204	MP0045
205	MP0044
206	MP0144
207	MP0152
208	MP0088
209	MP0149
210	MP0069
211	MP0095
212	MP0096
214	MP0097
215	MP0098
216	MP0099
217	MP0100
220	MP0074
221	MP0075
222	MP0073
223	MP0076
224	MP0132
225	MP0133
226	MP0164
230	MP0039
231	MP0040
232	MP0022
233	MP0086
240	MP0060
241	MP0061
250	MP0056
251	MP0057
252	MP0058
253	MP0108
254	MP0109
255	MP0110
256	MP0107
260	MP0145
261	MP0146
265	MP0091
266	MP0150
267	MP0151
268	MP0153
269	MP0090
270	MP0065
271	MP0066
272	MP0126
273	MP0128
274	MP0127
275	MP0130
276	MP0129
278	MP0105
279	MP0106
280	MP0034
281	MP0035
300	MP0002
301	MP0001
302	MP0017
305	MP0028
306	MP0030
307	MP0031
308	MP0083
309	MP0085
310	MP0032
311	MP0026
312	MP0027
313	MP0029
314	MP0015
315	MP0078
316	MP0016
317	MP0104
318	MP0080
319	MP0087
320	MP0131
321	MP0084
322	MP0143
323	MP0111
324	MP0112
325	MP0113
326	MP0121

MOZZI RUOTA
AXEL SHAFTS BEARING
MOYEUX ROUE
LISTA DI COMPARAZIONE - CROSS REFERENCES - LISTE CORRISPONDANCE

327	**MP0122**
328	**MP0123**
329	**MP0124**
330	**MP0125**
331	**MP0147**
332	**MP0148**
333	**MP0134**
334	**MP0135**
335	**MP0114**
336	**MP0115**
337	**MP0116**
338	**MP0117**
339	**MP0136**
340	**MP0138**
341	**MP0137**
342	**MP0154**
343	**MP0155**
344	**MP0159**
345	**MP0163**
346	**MP0119**
347	**MP0120**
348	**MP0094**
349	**MP0092**
350	**MP0003**
350	**MP0023**
351	**MP0007**
351	**MP0020**
352	**MP0021**
353	**MP0024**
354	**MP0008**
355	**MP0025**
356	**MP0082**
357	**MP0081**
358	**MP0103**
359	**MP0102**
360	**MP0079**
370	**MP0093**
371	**MP0101**
371	**MP0118**
372	**MP0157**
373	**MP0160**
374	**MP0161**
375	**MP0162**
376	**MP0156**
377	**MP0206**
378	**MP0158**
379	**MP0139**
380	**MP0140**
381	**MP0141**
382	**MP0142**
383	**MP0168**
384	**MP0174**
385	**MP0175**
386	**MP0184**
387	**MP0186**
388	**MP0187**
389	**MP0189**
390	**MP0190**
391	**MP0193**
392	**MP0200**
393	**MP0197**
394	**MP0198**
395	**MP0199**
396	**MP0202**
397	**MP0203**
398	**MP0205**
399	**MP0208**

400	**MP0209**
401	**MP0210**
402	**MP0211**
403	**MP0213**
404	**MP0167**
405	**MP0182**
406	**MP0204**
407	**MP0212**
408	**MP0207**
409	**MP0177**
410	**MP0176**
411	**MP0179**
412	**MP0201**
413	**MP0185**
414	**MP0188**
415	**MP0195**
416	**MP0196**
417	**MP0194**
418	**MP0170**
419	**MP0171**
420	**MP0172**
421	**MP0191**
422	**MP0192**
423	**MP0165**
424	**MP0180**
425	**MP0178**
426	**MP0166**
427	**MP0169**
428	**MP0173**
431	**MP0183**
432	**MP0181**
500	**MP0006**
501	**MP0014**

SKF	**CORAM**
633555	**MP0028**
BA2B633200C	**MP0001**
BA2B633265	**MP0002**
BAF0040	**MP0165**
BAF0049	**MP0166**
BAFB444450BB	**MP0215**
BAFB633622	**MP0002**
BAR0048	**MP0197**
BAR0051	**MP0209**
BAR0053B	**MP0198**
BARB636109E	**MP0175**
VKBA1303	**MP0028**
VKBA1304	**MP0030**
VKBA1313	**MP0157**
VKBA1408	**MP0206**
VKBA1411	**MP0100**
VKBA1434	**MP0158**
VKBA1435	**MP0159**
VKBA1436	**MP0155**
VKBA1437	**MP0156**
VKBA1440	**MP0027**
VKBA1440	**MP0033**
VKBA1441	**MP0029**
VKBA1443	**MP0018**
VKBA1449	**MP0083**
VKBA1450	**MP0085**
VKBA1458	**MP0092**
VKBA1476	**MP0031**
VKBA1481	**MP0110**
VKBA1482	**MP0107**

VKBA310	**MP0014**
VKBA3415	**MP0161**
VKBA3422	**MP0129**
VKBA3424	**MP0178**
VKBA3425	**MP0162**
VKBA3436	**MP0084**
VKBA3438	**MP0131**
VKBA3439	**MP0131**
VKBA3442	**MP0080**
VKBA3454	**MP0201**
VKBA3456	**MP0090**
VKBA3459	**MP0087**
VKBA3471	**MP0160**
VKBA3477	**MP0176**
VKBA3478	**MP0179**
VKBA3482	**MP0177**
VKBA3488	**MP0161**
VKBA3491	**MP0204**
VKBA3514	**MP0199**
VKBA3549	**MP0169**
VKBA3567	**MP0171**
VKBA3569	**MP0170**
VKBA3583	**MP0180**
VKBA3643	**MP0172**
VKBA3930	**MP0212**
VKBA625	**MP0002**
VKBA626	**MP0001**
VKBA627	**MP0001**
VKBA734	**MP0006**
VKBA746	**MP0136**
VKBA890	**MP0093**
VKBA913	**MP0137**
VKBA914	**MP0138**
VKBA938	**MP0093**
VKBA940	**MP0002**
VKBA940	**MP0032**
VKBA943	**MP0136**
VKBA967	**MP0131**
VKBA968	**MP0131**

SNR	**CORAM**
R150.15	**MP0093**
R150.17	**MP0093**
R150.22	**MP0092**
R152.43	**MP0110**
R152.44	**MP0107**
R153.22	**MP0129**
R15330	**MP0198**
R15331	**MP0197**
R15334	**MP0199**
R15451	**MP0169**
R155.25	**MP0131**
R155.39	**MP0131**
R155.40	**MP0131**
R155.41	**MP0131**
R15556	**MP0204**
R157.27	**MP0017**
R15731	**MP0171**
R15732	**MP0170**
R158.089	**MP0001**
R158.10	**MP0002**
R158.13	**MP0006**
R158.14	**MP0014**
R158.17	**MP0002**
R158.17	**MP0032**

MOZZI RUOTA
AXEL SHAFTS BEARING
MOYEUX ROUE
LISTA DI COMPARAZIONE - CROSS REFERENCES - LISTE CORRISPONDANCE

R158.19	**MP0030**
R158.20	**MP0028**
R158.21	**MP0029**
R158.22	**MP0027**
R158.22	**MP0033**
R158.26	**MP0026**
R158.29	**MP0018**
R158.33	**MP0031**
R158.39	**MP0080**
R15823	**MP0180**
R15932	**MP0178**
R15933	**MP0177**
R15936	**MP0201**
R15937	**MP0176**
R160.16	**MP0083**
R160.17	**MP0085**
R160.22	**MP0084**
R16026	**MP0166**
R164.07	**MP0136**
R164.09	**MP0136**
R164.10	**MP0137**
R164.11	**MP0138**
R16413	**MP0206**
R165.10	**MP0155**
R165.12	**MP0157**
R165.13	**MP0158**
R165.14	**MP0159**
R165.15	**MP0156**
R165.17	**MP0161**
R165.18	**MP0160**
R166.21	**MP0100**
R16623	**MP0179**
R18261	**MP0207**
R18601	**MP0175**
TGB12095S43	**MP0077**
TGB12894	**MP0215**

CUSCINETTI AMMORTIZZATORE
SHOCKABSORBER BEARING
ROULEMENTS AMORTISSEURS

ALFA ROMEO

MODELLO	DIMENSIONI	ANNO	RIF ORIGINALE	RIF CORAM	NOTE
33					
1.3		83-89	60501446	**CA013**	ANTERIORE
1.2 (905.A)		83-89	60501446	**CA013**	ANTERIORE
1.3		83-89	60501446	**CA013**	ANTERIORE
1.3 i.e.		83-89	60501446	**CA013**	ANTERIORE
1.4 i.e. (907.A3A, 907.A3B)		91-94	60501446	**CA013**	ANTERIORE
1.5		83-93	60501446	**CA013**	ANTERIORE
1.5 i.e.		90-94	60501446	**CA013**	ANTERIORE
1.5 4x4		83-89	60501446	**CA013**	ANTERIORE
1.5 4x4 (905.A2F, 905.A2M, 905.A2T)		86-89	60501446	**CA013**	ANTERIORE
1.5 QV (905.A2N, 905.A2V)		84-89	60501446	**CA013**	ANTERIORE
1.7		86-89	60501446	**CA013**	ANTERIORE
1.7 i.e. (905.A3D)		88-89	60501446	**CA013**	ANTERIORE
1.7 i.e. (907.A1A)		90-94	60501446	**CA013**	ANTERIORE
1.7 i.e. 4x4		90-92	60501446	**CA013**	ANTERIORE
1.7 QV (905.A3)		88-89	60501446	**CA013**	ANTERIORE
1.8 TD		86-90	60501446	**CA013**	ANTERIORE
33 Sport Wagon (907B)					
1.4 i.e.		91-94	60501446	**CA013**	ANTERIORE
1.4 i.e. 4x4		91-94	60501446	**CA013**	ANTERIORE
1.5 i.e.		90-94	60501446	**CA013**	ANTERIORE
1.7 i.e.		92-94	60501446	**CA013**	ANTERIORE
1.7 i.e. 4x4		90-92	60501446	**CA013**	ANTERIORE
33 Sport Wagon (907A)					
1.5		84-89	60501446	**CA013**	ANTERIORE
1.5 4x4		84-89	60501446	**CA013**	ANTERIORE
1.7		88-89	60501446	**CA013**	ANTERIORE
1.7 i.e.		88-89	60501446	**CA013**	ANTERIORE
1.7 i.e. 4x4		88-89	60501446	**CA013**	ANTERIORE
1.8 TD		86-89	60501446	**CA013**	ANTERIORE
145/146					
1.4 i.e - 1.4 i.e 16V T.S.		94->	60806398	**CA006**	ANTERIORE
1.6 i.e - 1.6 i.e 16V T.S.		94-01	60806398	**CA006**	ANTERIORE
1.7 i.e 16V		94-96	60806398	**CA006**	ANTERIORE
1.8 i.e 16V - 1.8 i.e. 16V T.S.		96-01	60806398	**CA006**	ANTERIORE
1.9 JTD - 1.9 TD		94-01	60806398	**CA006**	ANTERIORE
2.0 16V Quadrifoglio - 2.0 16V T.S		95-01	60806398	**CA006**	ANTERIORE

CUSCINETTI AMMORTIZZATORE
SHOCKABSORBER BEARING
ROULEMENTS AMORTISSEURS

follows ALFA ROMEO

MODELLO	DIMENSIONI	ANNO	RIF ORIGINALE	RIF CORAM	NOTE
155					
1.6 16V T.S.		92->	60806398	**CA006**	ANTERIORE
1.7 T.S. - 1.7 T.S. 16V		93-97	60806398	**CA006**	ANTERIORE
1.7 T.S. (167.A4D, 167.A4H)		93-96	60806398	**CA006**	ANTERIORE
1.8 T.S.		92-97	60806398	**CA006**	ANTERIORE
1.8 T.S. Sport (167.A4A,167.A4C,167.A4E)		92-96	60806398	**CA006**	ANTERIORE
1.9 TD (167.A3)		93-97	60806398	**CA006**	ANTERIORE
2.0 16V Turbo Q4		92-97	60806398	**CA006**	ANTERIORE
2.0 16V turboQ4(167.A2B,167.A2C,167.A2E)		92-97	60806398	**CA006**	ANTERIORE
2.0 T.S (167.A2) - 2.0 T.S (167.A2A)		92-95	60806398	**CA006**	ANTERIORE
2.0 T.S. 16V (167.A2G)		95-97	60806398	**CA006**	ANTERIORE
2.5 TD (167.A1A)		93-97	60806398	**CA006**	ANTERIORE
2.5 V6 (167.A1C, 167.A1E) - 2.5 V6 (167.A1)		92-97	60806398	**CA006**	ANTERIORE
164					
2.0		87-98	60501446	**CA013**	ANTERIORE
2.0 T.S. (164.A2C, 164.A2L)		87-92	60501446	**CA013**	ANTERIORE
2.0 T.S. (164.A2H)		87-90	60501446	**CA013**	ANTERIORE
2.0 T.S. (164.H3)		92-98	60501446	**CA013**	ANTERIORE
2.0 Turbo		87-98	60501446	**CA013**	ANTERIORE
2.0 V6 Turbo (164.A2G,164.A2F)		91-92	60501446	**CA013**	ANTERIORE
2.0 V6 Turbo (164.K3)		92-98	60501446	**CA013**	ANTERIORE
2.5 TD (164.A1A)		87-92	60501446	**CA013**	ANTERIORE
2.5 TD (164.K2A, 164.K2B)		92-98	60501446	**CA013**	ANTERIORE
3.0 i.e QV (164.AG)		90-92	60501446	**CA013**	ANTERIORE
3.0 V6 (164.A, 164.AD, 164.AH, 164.AB)		87-92	60501446	**CA013**	ANTERIORE
3.0 V6 (164.H1A, 164.H1B, 164.K1P)		92-98	60501446	**CA013**	ANTERIORE
ARNA					
1.2 (920.AA, 920.AB, 920.AC)		85-86	60501446	**CA013**	ANTERIORE
1.3 TI (920.A1B)		83-86	60501446	**CA013**	ANTERIORE
1.5		85-86	60501446	**CA013**	ANTERIORE

CUSCINETTI AMMORTIZZATORE
SHOCKABSORBER BEARING
ROULEMENTS AMORTISSEURS

AUDI

MODELLO	DIMENSIONI	ANNO	RIF ORIGINALE	RIF CORAM	NOTE
80 (80, 82, B1)					
1.3		72-78	021156017A	**CA017**	ANTERIORE
1.6		75-78	021156017A	**CA017**	ANTERIORE
1.6 GT		73-76	021156017A	**CA017**	ANTERIORE
1.6 GTE		76-78	021156017A	**CA017**	ANTERIORE
80 (81, 85, B2)					
1.3		78-86	021156017A	**CA017**	ANTERIORE
1.6		78-86	021156017A	**CA017**	ANTERIORE
1.6 D		80-86	021156017A	**CA017**	ANTERIORE
1.6 GLE		79-86	021156017A	**CA017**	ANTERIORE
1.6 TD		81-86	021156017A	**CA017**	ANTERIORE
1.8		83-86	021156017A	**CA017**	ANTERIORE
1.8 CC quattro (85Q)		84-86	021156017A	**CA017**	ANTERIORE
1.8 GTE		84-86	021156017A	**CA017**	ANTERIORE
1.8 GTE quattro (85Q)		84-86	021156017A	**CA017**	ANTERIORE
1.9 CD-5S		81-83	021156017A	**CA017**	ANTERIORE
2.0		83-84	021156017A	**CA017**	ANTERIORE
2.0 quattro (85Q) - 2.2 quattro (85Q)		82-84	021156017A	**CA017**	ANTERIORE
80 (89,89Q,8A,B3)					
1.4		86-88	021156017A	**CA017**	ANTERIORE
1.6		86-91	021156017A	**CA017**	ANTERIORE
1.6 D - 1.6 TD		86-91	021156017A	**CA017**	ANTERIORE
1.8 - 1.8 quattro		86-90	021156017A	**CA017**	ANTERIORE
1.8 E - 1.8 E quattro		86-91	021156017A	**CA017**	ANTERIORE
1.8 S - 1.8 S quattro		86-91	021156017A	**CA017**	ANTERIORE
1.9 D		89-91	021156017A	**CA017**	ANTERIORE
2.0 - 2.0 quattro		90-91	021156017A	**CA017**	ANTERIORE
2.0 E - 2.0 E quattro		88-90	021156017A	**CA017**	ANTERIORE
2.0 E 16V - 2.0 E 16V quattro		90-91	021156017A	**CA017**	ANTERIORE
80 (8C,B4)					
1.6		91-94	021156017A	**CA017**	ANTERIORE
1.6 E		93-94	021156017A	**CA017**	ANTERIORE
1.9 TD - 1.9 TDI		91-94	021156017A	**CA017**	ANTERIORE
2.0 - 2.0 E - 2.0 E quattro		91-94	021156017A	**CA017**	ANTERIORE
2.0 E 16V - 2.0 E 16V quattro		92-94	021156017A	**CA017**	ANTERIORE
2.3 E - 2.3 E quattro		91-94	021156017A	**CA017**	ANTERIORE
2.6 - 2.6 quattro		92-94	021156017A	**CA017**	ANTERIORE
2.8 - 2.8 quattro		91-94	021156017A	**CA017**	ANTERIORE
S2 quattro		93-94	021156017A	**CA017**	ANTERIORE

CUSCINETTI AMMORTIZZATORE
SHOCKABSORBER BEARING
ROULEMENTS AMORTISSEURS

follows AUDI

MODELLO	DIMENSIONI	ANNO	RIF ORIGINALE	RIF CORAM	NOTE
80 Avant (8C,B4)					
1.6 E		93-96	021156017A	**CA017**	ANTERIORE
1.9 TDI		92-96	021156017A	**CA017**	ANTERIORE
2.0 - 2.0 E		92-96	021156017A	**CA017**	ANTERIORE
2.0 E 16V - 2.0 E 16V quattro		92-96	021156017A	**CA017**	ANTERIORE
2.3 E - 2.3 E quattro		91-96	021156017A	**CA017**	ANTERIORE
2.6 - 2.6 quattro		92-96	021156017A	**CA017**	ANTERIORE
2.8 - 2.8 quattro		91-96	021156017A	**CA017**	ANTERIORE
RS2 quattro (P1)		93-95	021156017A	**CA017**	ANTERIORE
S2 quattro		93-95	021156017A	**CA017**	ANTERIORE
90 (81,85,B2)					
1.6 TD		85-87	021156017A	**CA017**	ANTERIORE
2.0		84-87	021156017A	**CA017**	ANTERIORE
2.2 - 2.2 E quattro		84-87	021156017A	**CA017**	ANTERIORE
90 (89,89Q,8A,B3)					
1.6 TD		87-91	021156017A	**CA017**	ANTERIORE
2.0 - 2.0 20 V - 2.0 20 V quattro		88-91	021156017A	**CA017**	ANTERIORE
2.2 E - 2.2 E quattro		87-91	021156017A	**CA017**	ANTERIORE
2.3 E		87-91	021156017A	**CA017**	ANTERIORE
2.3 E 20V - 2.3 E 20V quattro -2.3 E quattro		88-91	021156017A	**CA017**	ANTERIORE
A3 (8L1)					
1.6		96-00	357412249	**CA016**	ANTERIORE
1.8		96->	357412249	**CA016**	ANTERIORE
1.8 quattro		98->	357412249	**CA016**	ANTERIORE
1.8 T		96->	357412249	**CA016**	ANTERIORE
1.8 T quattro		96->	357412249	**CA016**	ANTERIORE
1.9 TDI		96-01	357412249	**CA016**	ANTERIORE
1.9 TDI quattro		00->	357412249	**CA016**	ANTERIORE
S3 quattro		99->	357412249	**CA016**	ANTERIORE
CABRIOLET (8GT,B4)					
1.8		97-00	021156017A	**CA017**	ANTERIORE
1.9 TDI		95-00	021156017A	**CA017**	ANTERIORE
2.0 16V		95-96	021156017A	**CA017**	ANTERIORE
2.0 E		93-98	021156017A	**CA017**	ANTERIORE
2.3 E		91-94	021156017A	**CA017**	ANTERIORE
2.8		92-00	021156017A	**CA017**	ANTERIORE

CUSCINETTI AMMORTIZZATORE
SHOCKABSORBER BEARING
ROULEMENTS AMORTISSEURS

follows AUDI

MODELLO	DIMENSIONI	ANNO	RIF ORIGINALE	RIF CORAM	NOTE
COUPE (81,85)					
1.6		80-81	021156017A	**CA017**	ANTERIORE
1.8		81-83	021156017A	**CA017**	ANTERIORE
1.8 GT		82-88	021156017A	**CA017**	ANTERIORE
1.8 GT quattro		84-88	021156017A	**CA017**	ANTERIORE
1.9		80-83	021156017A	**CA017**	ANTERIORE
2.0		83-88	021156017A	**CA017**	ANTERIORE
2.1 GT		82-84	021156017A	**CA017**	ANTERIORE
2.2 quattro		84-88	021156017A	**CA017**	ANTERIORE
2.2 GT		81-88	021156017A	**CA017**	ANTERIORE
2.3 - 2.3 quattro		87-88	021156017A	**CA017**	ANTERIORE
COUPE (89,8B)					
1.8		89-91	021156017A	**CA017**	ANTERIORE
2.0		89-96	021156017A	**CA017**	ANTERIORE
2.0 16V		92-96	021156017A	**CA017**	ANTERIORE
2.0 20V quattro		89-91	021156017A	**CA017**	ANTERIORE
2.2 quattro		88-91	021156017A	**CA017**	ANTERIORE
2.3 - 2.3 quattro		88-96	021156017A	**CA017**	ANTERIORE
2.3 20V - 2.3 20V quattro		88-91	021156017A	**CA017**	ANTERIORE
2.6 - 2.6 quattro		92-96	021156017A	**CA017**	ANTERIORE
2.8 -2.8 quattro - S2 quattro		90-92	021156017A	**CA017**	ANTERIORE
QUATTRO (85)					
2.1 Turbo		80-87	021156017A	**CA017**	ANTERIORE
2.2 20V		89-91	021156017A	**CA017**	ANTERIORE
2.2 Turbo		87-89	021156017A	**CA017**	ANTERIORE
TT (8N3)					
1.8 T		98->	357412249	**CA016**	ANTERIORE
1.8 T quattro		98->	357412249	**CA016**	ANTERIORE
3.2 VR6 quattro		03->	357412249	**CA016**	ANTERIORE
TT Roadster (8N9)					
1.8 T		99->	357412249	**CA016**	ANTERIORE
1.8 T quattro		99->	357412249	**CA016**	ANTERIORE
3.2 VR6 quattro		03->	357412249	**CA016**	ANTERIORE

CUSCINETTI AMMORTIZZATORE
SHOCKABSORBER BEARING
ROULEMENTS AMORTISSEURS

CITROËN

MODELLO	DIMENSIONI	ANNO	RIF ORIGINALE	RIF CORAM	NOTE
AX					
1.0		86-98	5035.27	**CA009**	ANTERIORE
1.0 E		96-88	5035.27	**CA009**	ANTERIORE
1.1		86-97	5035.27	**CA009**	ANTERIORE
1.1 Cat.		88-89	5035.27	**CA009**	ANTERIORE
1.4		86-97	5035.27	**CA009**	ANTERIORE
1.4 4x4		91-96	5035.27	**CA009**	ANTERIORE
1.4 D		88-97	5035.27	**CA009**	ANTERIORE
1.4 Gti		91-96	5035.27	**CA009**	ANTERIORE
1.5 D		94-97	5035.27	**CA009**	ANTERIORE
BERLINGO					
1.1 i (MFHDZ)		96->	5035.27	**CA009**	ANTERIORE
1.4 i (MFKFX)		96->	5035.27	**CA009**	ANTERIORE
1.8 i (MFLFX)		97->	5035.27	**CA009**	ANTERIORE
1.9 D (MFDJY - MFWJZ)		96->	5035.27	**CA009**	ANTERIORE
BERLINGO furgonato					
1.1 i (MAHDZ, MBHDZ)		96->	5035.27	**CA009**	ANTERIORE
1.4 i (MBKFX)		96->	5035.27	**CA009**	ANTERIORE
1.8 D (MBA9A, MCA9A)		96->	5035.27	**CA009**	ANTERIORE
1.9 D (		96->	5035.27	**CA009**	ANTERIORE
BX					
1.1		86-92	75472408	**CA008**	ANTERIORE/POSTERIORE
1.4		89-93	75472408	**CA008**	ANTERIORE/POSTERIORE
1.4 E		82-93	75472408	**CA008**	ANTERIORE/POSTERIORE
1.5		87-92	75472408	**CA008**	ANTERIORE/POSTERIORE
1.6		82-93	75472408	**CA008**	ANTERIORE/POSTERIORE
1.6 E		89-93	75472408	**CA008**	ANTERIORE/POSTERIORE
1.8 D		85-93	75472408	**CA008**	ANTERIORE/POSTERIORE
1.9		86-89	75472408	**CA008**	ANTERIORE/POSTERIORE
1.9 D		83-93	75472408	**CA008**	ANTERIORE/POSTERIORE
1.9 E		88-93	75472408	**CA008**	ANTERIORE/POSTERIORE
1.9 E 4x4		89-93	75472408	**CA008**	ANTERIORE/POSTERIORE
1.9 GTi		86-93	75472408	**CA008**	ANTERIORE/POSTERIORE
1.9 GTi 16V		87-93	75472408	**CA008**	ANTERIORE/POSTERIORE
1.9 GTi 4x4		88-93	75472408	**CA008**	ANTERIORE/POSTERIORE
TRD Turbo		88-93	75472408	**CA008**	ANTERIORE/POSTERIORE

CUSCINETTI AMMORTIZZATORE
SHOCKABSORBER BEARING
ROULEMENTS AMORTISSEURS

follows CITROËN

MODELLO	DIMENSIONI	ANNO	RIF ORIGINALE	RIF CORAM	NOTE
BX Break					
1.4		89-93	75472408	**CA008**	ANTERIORE/POSTERIORE
1.5		87-92	75472408	**CA008**	ANTERIORE/POSTERIORE
1.6		85-94	75472408	**CA008**	ANTERIORE/POSTERIORE
1.8 D		85-93	75472408	**CA008**	ANTERIORE/POSTERIORE
1.9		86-94	75472408	**CA008**	ANTERIORE/POSTERIORE
1.9 4x4		90-91	75472408	**CA008**	ANTERIORE/POSTERIORE
1.9 Cat.		86-94	75472408	**CA008**	ANTERIORE/POSTERIORE
1.9 D		83-94	75472408	**CA008**	ANTERIORE/POSTERIORE
TRD Turbo		88-94	75472408	**CA008**	ANTERIORE/POSTERIORE
C8					
2.0		02->	5035.29	**CA014**	ANTERIORE
2.0 HDi		02->	5035.29	**CA014**	ANTERIORE
2.2 - 2.2 HDi		02->	5035.29	**CA014**	ANTERIORE
3.0 V6		02->	5035.29	**CA014**	ANTERIORE
C15					
1.8 D		86-00	5035.27	**CA009**	ANTERIORE
C15 (VD-_) furgonato					
1.0		84-97	75472408	**CA008**	ANTERIORE/POSTERIORE
1.1		84-96	75472408	**CA008**	ANTERIORE/POSTERIORE
1.1 i		88-96	75472408	**CA008**	ANTERIORE/POSTERIORE
1.4 - 1.4 E		87-96	75472408	**CA008**	ANTERIORE/POSTERIORE
1.4 i		91-96	75472408	**CA008**	ANTERIORE/POSTERIORE
1.8 D		86-00	75472408	**CA008**	ANTERIORE/POSTERIORE
CX I					
2.0		74-85	75472408	**CA008**	ANTERIORE/POSTERIORE
2.2		74-85	75472408	**CA008**	ANTERIORE/POSTERIORE
2.2 D		75-79	75472408	**CA008**	ANTERIORE/POSTERIORE
2.4		76-82	75472408	**CA008**	ANTERIORE/POSTERIORE
2.4 GTi		77-82	75472408	**CA008**	ANTERIORE/POSTERIORE
2.5 D Turbo		83-85	75472408	**CA008**	ANTERIORE/POSTERIORE
2.5 GTi Turbo 2		84-85	75472408	**CA008**	ANTERIORE/POSTERIORE
2.5 TRi		83-85	75472408	**CA008**	ANTERIORE/POSTERIORE
2.5 D		78-82	75472408	**CA008**	ANTERIORE/POSTERIORE

CUSCINETTI AMMORTIZZATORE
SHOCKABSORBER BEARING
ROULEMENTS AMORTISSEURS

follows CITROËN

MODELLO	DIMENSIONI	ANNO	RIF ORIGINALE	RIF CORAM	NOTE
CX II					
2.0 RE		85-92	75472408	**CA008**	ANTERIORE/POSTERIORE
2.2 TRS		85-89	75472408	**CA008**	ANTERIORE/POSTERIORE
2.5 D		85-92	75472408	**CA008**	ANTERIORE/POSTERIORE
2.5 D Turbo		85-92	75472408	**CA008**	ANTERIORE/POSTERIORE
2.5 GTi		86-92	75472408	**CA008**	ANTERIORE/POSTERIORE
2.5 GTi Turbo 2		85-92	75472408	**CA008**	ANTERIORE/POSTERIORE
2.5 TRi		85-92	75472408	**CA008**	ANTERIORE/POSTERIORE
EVASION					
1.8		97-02	5035.29	**CA014**	ANTERIORE
1.9		95-98	5035.29	**CA014**	ANTERIORE
1.9 TD		94-02	5035.29	**CA014**	ANTERIORE
2.0		94-02	5035.29	**CA014**	ANTERIORE
2.0 Turbo C.T.		94-02	5035.29	**CA014**	ANTERIORE
2.0 16 V		98-02	5035.29	**CA014**	ANTERIORE
2.0 HDI		99-02	5035.29	**CA014**	ANTERIORE
2.0 TD		97-02	5035.29	**CA014**	ANTERIORE
2.1 TD		96-02	5035.29	**CA014**	ANTERIORE
SAXO					
1.0 X		96->	5035.27	**CA009**	ANTERIORE
1.1 X, SX		96->	5035.27	**CA009**	ANTERIORE
1.4 VTS		96->	5035.27	**CA009**	ANTERIORE
1.5 D		96->	5035.27	**CA009**	ANTERIORE
1.6 VTL, VTR, VTS		96->	5035.27	**CA009**	ANTERIORE
VISA					
1.4		84-91	5035.27	**CA009**	ANTERIORE
1.4 GT		82-91	5035.27	**CA009**	ANTERIORE
1.7 D		84-91	5035.27	**CA009**	ANTERIORE
JUMPER Autobus					
1.9 D		99-02	5035.30	**CA012**	ANTERIORE
1.9 TD		94-02	5035.30	**CA012**	ANTERIORE
1.9 TD 4x4		96-02	5035.30	**CA012**	ANTERIORE
2.0		94-02	5035.30	**CA012**	ANTERIORE
2.0 4x4		86-02	5035.30	**CA012**	ANTERIORE
2.5 D		94-02	5035.30	**CA012**	ANTERIORE
2.5 D 4x4		94-02	5035.30	**CA012**	ANTERIORE
2.5 TD		94-02	5035.30	**CA012**	ANTERIORE
2.5 TD 4x4		96-02	5035.30	**CA012**	ANTERIORE
2.5 TDI		96-00	5035.30	**CA012**	ANTERIORE
2.5 TDI 4x4		96-00	5035.30	**CA012**	ANTERIORE
2.8 HDI		00-02	5035.30	**CA012**	ANTERIORE
2.8 HDI 4x4		00-02	5035.30	**CA012**	ANTERIORE

CUSCINETTI AMMORTIZZATORE
SHOCKABSORBER BEARING
ROULEMENTS AMORTISSEURS

follows CITROËN

MODELLO	DIMENSIONI	ANNO	RIF ORIGINALE	RIF CORAM	NOTE
JUMPER Furgonato					
1.9 D		94-02	5035.30	**CA012**	ANTERIORE
1.9 TD		94-02	5035.30	**CA012**	ANTERIORE
2.0		94-02	5035.30	**CA012**	ANTERIORE
2.0 HDI		01->	5035.30	**CA012**	ANTERIORE
2.5 D		94-02	5035.30	**CA012**	ANTERIORE
2.5 D 4x4		00-02	5035.30	**CA012**	ANTERIORE
2.5 TD		94-02	5035.30	**CA012**	ANTERIORE
2.5 TDI		96-01	5035.30	**CA012**	ANTERIORE
2.5 TDI 4x4		00-00	5035.30	**CA012**	ANTERIORE
2.8 HDI		00-02	5035.30	**CA012**	ANTERIORE
2.8 HDI 4x4		00-02	5035.30	**CA012**	ANTERIORE
JUMPER Pianale piatto/Autotelaio					
1.9 TD		94-02	5035.30	**CA012**	ANTERIORE
2.0		94-02	5035.30	**CA012**	ANTERIORE
2.5 D		94-02	5035.30	**CA012**	ANTERIORE
2.5 D 4x4		00-02	5035.30	**CA012**	ANTERIORE
2.5 TD		94-02	5035.30	**CA012**	ANTERIORE
2.5 TDI		96-02	5035.30	**CA012**	ANTERIORE
2.5 TDI 4x4		00-02	5035.30	**CA012**	ANTERIORE
2.8 HDI		00-02	5035.30	**CA012**	ANTERIORE
JUMPY					
1.6		95->	5035.29	**CA014**	ANTERIORE
1.9 D - 1.9 TD		95->	5035.29	**CA014**	ANTERIORE
2.0		00->	5035.29	**CA014**	ANTERIORE
2.0 HDi		99->	5035.29	**CA014**	ANTERIORE
2.0 i 16V		00->	5035.29	**CA014**	ANTERIORE
JUMPY Furgonato					
1.6 i		95->	5035.29	**CA014**	ANTERIORE
1.9 D		98->	5035.29	**CA014**	ANTERIORE
1.9 TD		95->	5035.29	**CA014**	ANTERIORE
2.0 Hdi		99->	5035.29	**CA014**	ANTERIORE
2.0 i 16V		00->	5035.29	**CA014**	ANTERIORE
JUMPY Pianale piatto/Autotelaio					
1.9 TD		99->	5035.29	**CA014**	ANTERIORE
2.0 Hdi		99->	5035.29	**CA014**	ANTERIORE

CUSCINETTI AMMORTIZZATORE
SHOCKABSORBER BEARING
ROULEMENTS AMORTISSEURS

follows CITROËN

MODELLO	DIMENSIONI	ANNO	RIF ORIGINALE	RIF CORAM	NOTE
XANTIA (X1)					
1.6 i		93-98	75472408	**CA008**	ANTERIORE/POSTERIORE
1.8 i		93-98	75472408	**CA008**	ANTERIORE/POSTERIORE
1.8 i 16V		95-98	75472408	**CA008**	ANTERIORE/POSTERIORE
1.9 D		94-98	75472408	**CA008**	ANTERIORE/POSTERIORE
1.9 SD		96-98	75472408	**CA008**	ANTERIORE/POSTERIORE
1.9 Turbo D		94-98	75472408	**CA008**	ANTERIORE/POSTERIORE
2.0 i		93-98	75472408	**CA008**	ANTERIORE/POSTERIORE
2.0 i 16V		93-98	75472408	**CA008**	ANTERIORE/POSTERIORE
2.0 Turbo		95-98	75472408	**CA008**	ANTERIORE/POSTERIORE
2.1 Turbo D 12V		95-98	75472408	**CA008**	ANTERIORE/POSTERIORE
3.0 i 24V		97-98	75472408	**CA008**	ANTERIORE/POSTERIORE
XANTIA (X2)					
1.8 i		98->	75472408	**CA008**	ANTERIORE/POSTERIORE
1.8 i 16V		98->	75472408	**CA008**	ANTERIORE/POSTERIORE
1.9 SD		98->	75472408	**CA008**	ANTERIORE/POSTERIORE
1.9 Turbo D		98->	75472408	**CA008**	ANTERIORE/POSTERIORE
2.0 HDI 109		99->	75472408	**CA008**	ANTERIORE/POSTERIORE
2.0 HDI 90		99->	75472408	**CA008**	ANTERIORE/POSTERIORE
2.0 i		98->	75472408	**CA008**	ANTERIORE/POSTERIORE
2.0 i 16V		98->	75472408	**CA008**	ANTERIORE/POSTERIORE
2.0 Turbo		98->	75472408	**CA008**	ANTERIORE/POSTERIORE
2.1 Turbo D 12V		98->	75472408	**CA008**	ANTERIORE/POSTERIORE
3.0 V6		98->	75472408	**CA008**	ANTERIORE/POSTERIORE
XSARA					
1.4 i		97->	5035.27	**CA009**	ANTERIORE
1.5 D		97-00	5035.27	**CA009**	ANTERIORE
1.6 i		97-00	5035.27	**CA009**	ANTERIORE
1.8 D - 1.8 i - 1.8 i 16V - 1.8 i Aut. - 1.8 TD		97-00	5035.27	**CA009**	ANTERIORE
1.9 D		97-00	5035.27	**CA009**	ANTERIORE
1.9 SD		98-00	5035.27	**CA009**	ANTERIORE
1.9 TD		97-00	5035.27	**CA009**	ANTERIORE
2.0 16V		97-00	5035.27	**CA009**	ANTERIORE
2.0 Hdi 90		99->	5035.27	**CA009**	ANTERIORE
XSARA Break					
1.4 i		97->	5035.27	**CA009**	ANTERIORE
1.5 D		97-00	5035.27	**CA009**	ANTERIORE
1.6 i		97-00	5035.27	**CA009**	ANTERIORE
1.8 D - 1.8 i - 1.8 i 16V - 1.8 i Aut.		97-00	5035.27	**CA009**	ANTERIORE
1.9 D - 1.9 TD		97-00	5035.27	**CA009**	ANTERIORE
2.0 16V		98-00	5035.27	**CA009**	ANTERIORE
2.0 HDI 90		99->	5035.27	**CA009**	ANTERIORE

CUSCINETTI AMMORTIZZATORE
SHOCKABSORBER BEARING
ROULEMENTS AMORTISSEURS

follows CITROËN

MODELLO	DIMENSIONI	ANNO	RIF ORIGINALE	RIF CORAM	NOTE
XM (Y3)					
2.0 i		89-94	75472408	**CA008**	ANTERIORE/POSTERIORE
2.0 i Turbo		92-94	75472408	**CA008**	ANTERIORE/POSTERIORE
2.1 D 12V		89-94	75472408	**CA008**	ANTERIORE/POSTERIORE
2.1 TD 12V		89-94	75472408	**CA008**	ANTERIORE/POSTERIORE
3.0 V6		89-94	75472408	**CA008**	ANTERIORE/POSTERIORE
3.0 V6 24V		90-94	75472408	**CA008**	ANTERIORE/POSTERIORE
XM (Y4)					
2.0 i 16V		94-00	75472408	**CA008**	ANTERIORE/POSTERIORE
2.0 Turbo		94-00	75472408	**CA008**	ANTERIORE/POSTERIORE
2.1 TD 12V		94-00	75472408	**CA008**	ANTERIORE/POSTERIORE
2.5 TD		94-00	75472408	**CA008**	ANTERIORE/POSTERIORE
3.0 V6		94-00	75472408	**CA008**	ANTERIORE/POSTERIORE
3.0 V6 24V		94-00	75472408	**CA008**	ANTERIORE/POSTERIORE
ZX					
1.1		91-97	5035.27	**CA009**	ANTERIORE
1.4 - 1.4 i		91-97	5035.27	**CA009**	ANTERIORE
1.6 i		91-97	5035.27	**CA009**	ANTERIORE
1.8 i		92-97	5035.27	**CA009**	ANTERIORE
1.9 D- 1.9 i		91-97	5035.27	**CA009**	ANTERIORE
1.9 TD		92-97	5035.27	**CA009**	ANTERIORE
2.0 i		92-97	5035.27	**CA009**	ANTERIORE
2.0 i 16V		92-97	5035.27	**CA009**	ANTERIORE
ZX Break					
1.4 i - 1.6 i - 1.8 i		93-97	5035.27	**CA009**	ANTERIORE
1.9 D - 1.9 TD		93-97	5035.27	**CA009**	ANTERIORE

CUSCINETTI AMMORTIZZATORE
SHOCKABSORBER BEARING
ROULEMENTS AMORTISSEURS

FIAT

MODELLO	DIMENSIONI	ANNO	RIF ORIGINALE	RIF CORAM	NOTE
128					
1.1		69-84	91537289	**CA009**	ANTERIORE
ARGENTA (132A)					
1600		81-85	4400895	**CA015**	ANTERIORE
1600		81-85	4400895	**CA015**	ANTERIORE
2000		78-85	4400895	**CA015**	ANTERIORE
2000 i.e.		81-86	4400895	**CA015**	ANTERIORE
2000 Volumex		84-85	4400895	**CA015**	ANTERIORE
2500 Diesel		81-85	4400895	**CA015**	ANTERIORE
2500 Turbodiesel		83-85	4400895	**CA015**	ANTERIORE
BRAVO					
2.0 HGT 20V (182.AD, 182AQ)		95-01	60806398	**CA005**	ANTERIORE
COUPE'					
1.8 16V		96->	60806398	**CA006**	ANTERIORE
2.0 16V - 2.0 16V Turbo		93-96	60806398	**CA006**	ANTERIORE
2.0 20V - 2.0 20V Turbo		96-98	60806398	**CA006**	ANTERIORE
DUCATO Autobus					
1.9 D		98-02	1318573080	**CA012**	ANTERIORE
1.9 D Combinato		95-02	1318573080	**CA012**	ANTERIORE
1.9 TD		98-02	1318573080	**CA012**	ANTERIORE
1.9 TD Combinato		94-02	1318573080	**CA012**	ANTERIORE
1.9 TD Panorama/Combinato		94-02	1318573080	**CA012**	ANTERIORE
2.0 JTD		01/02	1318573080	**CA012**	ANTERIORE
2.0 Panorama/Combinato		94-02	1318573080	**CA012**	ANTERIORE
2.5 D Combinato		94-02	1318573080	**CA012**	ANTERIORE
2.5 TDI 4x4		97-02	1318573080	**CA012**	ANTERIORE
2.5 TDI Combinato		94-02	1318573080	**CA012**	ANTERIORE
2.5 TDI Panorama/Combinato		94-02	1318573080	**CA012**	ANTERIORE
2.8 D		98-02	1318573080	**CA012**	ANTERIORE
2.8 JTD		00-02	1318573080	**CA012**	ANTERIORE
2.8 JTD 4x4		00-02	1318573080	**CA012**	ANTERIORE
2.8 TDI		97-02	1318573080	**CA012**	ANTERIORE
2.8 TDI 4x4		99-02	1318573080	**CA012**	ANTERIORE

CUSCINETTI AMMORTIZZATORE
SHOCKABSORBER BEARING
ROULEMENTS AMORTISSEURS

follows FIAT

MODELLO	DIMENSIONI	ANNO	RIF ORIGINALE	RIF CORAM	NOTE
DUCATO Furgonato					
1.9 D		94-02	1318573080	**CA012**	ANTERIORE
1.9 TD		94-02	1318573080	**CA012**	ANTERIORE
1.9 TD CAT		94-02	1318573080	**CA012**	ANTERIORE
2.0		94-02	1318573080	**CA012**	ANTERIORE
2.0 JTD		01-02	1318573080	**CA012**	ANTERIORE
2.5 D		94-02	1318573080	**CA012**	ANTERIORE
2.5 TDI		94-02	1318573080	**CA012**	ANTERIORE
2.5 TDI 4x4		98-02	1318573080	**CA012**	ANTERIORE
2.5 TDI Maxi		94-02	1318573080	**CA012**	ANTERIORE
2.8 D		98-02	1318573080	**CA012**	ANTERIORE
2.8 D 4x4		98-02	1318573080	**CA012**	ANTERIORE
2.8 JTD		00-02	1318573080	**CA012**	ANTERIORE
2.8 JTD 4x4		00-02	1318573080	**CA012**	ANTERIORE
2.8 TDI		97-02	1318573080	**CA012**	ANTERIORE
2.8 TDI 4x4		99-02	1318573080	**CA012**	ANTERIORE
DUCATO Pianale piatto/Autotelaio					
1.9 D		94-02	1318573080	**CA012**	ANTERIORE
1.9 TD		94-02	1318573080	**CA012**	ANTERIORE
1.9 TD CAT		94-02	1318573080	**CA012**	ANTERIORE
2.0		98-02	1318573080	**CA012**	ANTERIORE
2.0 4x4		98-02	1318573080	**CA012**	ANTERIORE
2.5 D		94-02	1318573080	**CA012**	ANTERIORE
2.5 D 4x4		94-02	1318573080	**CA012**	ANTERIORE
2.5 TDI		94-02	1318573080	**CA012**	ANTERIORE
2.5 TDI 4x4		98-02	1318573080	**CA012**	ANTERIORE
2.8 D		98-02	1318573080	**CA012**	ANTERIORE
2.8 JTD		00-02	1318573080	**CA012**	ANTERIORE
2.8 TDI		98-02	1318573080	**CA012**	ANTERIORE
DUNA (146 B)					
1.1 60		87-91	4400895	**CA015**	ANTERIORE
1.3 70		87-91	4400895	**CA015**	ANTERIORE
1.7 DS		87-91	4400895	**CA015**	ANTERIORE
DUNA Weekend (146 B)					
1.1 60		87-91	4400895	**CA015**	ANTERIORE
1.3 70		87-91	4400895	**CA015**	ANTERIORE
1.7 DS		87-91	4400895	**CA015**	ANTERIORE

CUSCINETTI AMMORTIZZATORE
SHOCKABSORBER BEARING
ROULEMENTS AMORTISSEURS

follows FIAT

MODELLO	DIMENSIONI	ANNO	RIF ORIGINALE	RIF CORAM	NOTE
FIORINO (147)					
1.0		86-88	4400895	**CA015**	ANTERIORE
1.1 60		86-88	4400895	**CA015**	ANTERIORE
1.3		87-93	4400895	**CA015**	ANTERIORE
1.3 Diesel		82-87	4400895	**CA015**	ANTERIORE
1.5		88-93	4400895	**CA015**	ANTERIORE
1.7 Diesel		88->	4400895	**CA015**	ANTERIORE
1.7 Diesel		87-90	4400895	**CA015**	ANTERIORE
FIORINO Furgonato (146 Uno)					
1.1 (60)		88-93	4400895	**CA015**	ANTERIORE
1.4 70 i.e.		94-01	4400895	**CA015**	ANTERIORE
1.5 75 i.e.		88-93	4400895	**CA015**	ANTERIORE
1.6 75 i.e.		93-01	4400895	**CA015**	ANTERIORE
1.7 D (60)		88-00	4400895	**CA015**	ANTERIORE
1.7 D (60)		88-86	4400895	**CA015**	ANTERIORE
MULTIPLA					
1.6 100 16V (186AXA1A)		99->	1303672080	**CA014**	ANTERIORE
1.6 16V Bipower (186AMB1A)		99->	1303672080	**CA014**	ANTERIORE
1.6 16V Blupower (186AMA1A)		99->	1303672080	**CA014**	ANTERIORE
1.9 JTD 105 (186AXB1A)		99->	1303672080	**CA014**	ANTERIORE
1.9 JTD 110		01-02	1303672080	**CA014**	ANTERIORE
1.9 JTD 115		02->	1303672080	**CA014**	ANTERIORE
PANDA (141A_)					
1000		85-92	4400895	**CA015**	ANTERIORE
1000 4x4		86-94	4400895	**CA015**	ANTERIORE
1000 i.e. Cat.		87-98	4400895	**CA015**	ANTERIORE
1300 D		86-92	4400895	**CA015**	ANTERIORE
650		82->	4400895	**CA015**	ANTERIORE
750 (141AA)		86-95	4400895	**CA015**	ANTERIORE
800		81-85	4400895	**CA015**	ANTERIORE
900		92-96	4400895	**CA015**	ANTERIORE
900		80-94	4400895	**CA015**	ANTERIORE
950 4x4		83-86	4400895	**CA015**	ANTERIORE
PANDA Van					
1000		86-92	4400895	**CA015**	ANTERIORE

CUSCINETTI AMMORTIZZATORE
SHOCKABSORBER BEARING
ROULEMENTS AMORTISSEURS

follows FIAT

MODELLO	DIMENSIONI	ANNO	RIF ORIGINALE	RIF CORAM	NOTE
REGATA (138)					
1.3 70		83-89	4400895	**CA015**	ANTERIORE
1.5 75		83-87	4400895	**CA015**	ANTERIORE
1.5 75 i.e.		85-89	4400895	**CA015**	ANTERIORE
1.5 85		85-87	4400895	**CA015**	ANTERIORE
1.5 85 Super		83-85	4400895	**CA015**	ANTERIORE
1.6 85		83-90	4400895	**CA015**	ANTERIORE
1.6 100 Super		83-90	4400895	**CA015**	ANTERIORE
1.7 60 Diesel		83-89	4400895	**CA015**	ANTERIORE
1.9 65 Diesel		84-89	4400895	**CA015**	ANTERIORE
1.9 80 Turbo Diesel		86-89	4400895	**CA015**	ANTERIORE
REGATA Weekend					
1.3 70		84-89	4400895	**CA015**	ANTERIORE
1.5 75		84-89	4400895	**CA015**	ANTERIORE
1.5 85		84-89	4400895	**CA015**	ANTERIORE
1.6 (RF) 100		84-86	4400895	**CA015**	ANTERIORE
1.6 90 i.e.		87-89	4400895	**CA015**	ANTERIORE
1.7 60 Diesel		84-89	4400895	**CA015**	ANTERIORE
1.9 65 Diesel		84-89	4400895	**CA015**	ANTERIORE
1.9 80 Turbo Diesel		86-89	4400895	**CA015**	ANTERIORE
RITMO I (138A)					
1.0 60		78-82	4400895	**CA015**	ANTERIORE
1.3 65		78-82	4400895	**CA015**	ANTERIORE
1.3 70		83-85	4400895	**CA015**	ANTERIORE
1.3 75		81-82	4400895	**CA015**	ANTERIORE
1.5 75		78-82	4400895	**CA015**	ANTERIORE
1.5 75 i.e.		85-87	4400895	**CA015**	ANTERIORE
1.5 85		81-82	4400895	**CA015**	ANTERIORE
1.6 105 Sport		81-82	4400895	**CA015**	ANTERIORE
1.7 55 Diesel		79-82	4400895	**CA015**	ANTERIORE
2.0 125 TC Abarth		81-82	4400895	**CA015**	ANTERIORE
RITMO II (138A)					
1.1 60		82-87	4400895	**CA015**	ANTERIORE
1.3 70		83-85	4400895	**CA015**	ANTERIORE
1.5 75 Cat.		85-88	4400895	**CA015**	ANTERIORE
1.5 85		83-87	4400895	**CA015**	ANTERIORE
1.6 100		83-87	4400895	**CA015**	ANTERIORE
1.6 105		83-87	4400895	**CA015**	ANTERIORE
1.7 60 Diesel		82-87	4400895	**CA015**	ANTERIORE
1.9 80 Turbo Diesel		85-87	4400895	**CA015**	ANTERIORE
2.0 130 TC Abarth		83-87	4400895	**CA015**	ANTERIORE

CUSCINETTI AMMORTIZZATORE
SHOCKABSORBER BEARING
ROULEMENTS AMORTISSEURS

follows FIAT

MODELLO	DIMENSIONI	ANNO	RIF ORIGINALE	RIF CORAM	NOTE
RITMO Bertone Cabriolet					
1.5 85		80-89	4400895	**CA015**	ANTERIORE
1.6 100		85-87	4400895	**CA015**	ANTERIORE
SCUDO Combinato					
1.6		96->	1303672080	**CA014**	ANTERIORE
1.9 D		96->	1303672080	**CA014**	ANTERIORE
1.9 TD - 1.9 TD Eco		96->	1303672080	**CA014**	ANTERIORE
2.0 16V		00->	1303672080	**CA014**	ANTERIORE
2.0 JTD		99->	1303672080	**CA014**	ANTERIORE
SCUDO Furgonato					
1.6		96->	1303672080	**CA014**	ANTERIORE
1.9 D - 1.9 TD		96->	1303672080	**CA014**	ANTERIORE
2.0 JTD		99->	1303672080	**CA014**	ANTERIORE
TEMPRA					
1.6		90-93	60806398	**CA006**	ANTERIORE
1.4 i.e. (159 AC) - 1.4 i.e. (159.AC, 159.AX)		91-96	60806398	**CA006**	ANTERIORE
1.6 i.e. (159.AE) - 1.6 i.e (159.AJ)		90-96	60806398	**CA006**	ANTERIORE
1.6 i.e. (159.AS, 159.AT)		92-96	60806398	**CA006**	ANTERIORE
1.8 i.e. (159.AN) - 1.8 i.e. (159.AV)		90-96	60806398	**CA006**	ANTERIORE
1.8 i.e. (159.AZ) - 1.8 i.e. (159.BY)		93-96	60806398	**CA006**	ANTERIORE
1.9 D (159.AG) - 1.9 TD (159.AQ)		91-96	60806398	**CA006**	ANTERIORE
1.9 TD (159.CU, 159.AU, 159.AI, 159.BI)		90-96	60806398	**CA006**	ANTERIORE
2.0 i.e (159.AP)		90-96	60806398	**CA006**	ANTERIORE
TEMPRA S.W.					
1.6		90-93	60806398	**CA006**	ANTERIORE
1.4 i.e. (159.AC) - 1.4 i.e. (159.AC, 159.AX)		91-96	60806398	**CA006**	ANTERIORE
1.6 i.e.(159.AE) - 1.6 i.e. (159.AJ)		90-96	60806398	**CA006**	ANTERIORE
1.6 i.e.(159.AS, 159.AT)		92-96	60806398	**CA006**	ANTERIORE
1.8 i.e.(159.AN) - 1.8 i.e.(159.AV)		90-96	60806398	**CA006**	ANTERIORE
1.8 i.e.(159.AZ) - 1.8 i.e.(159.BY)		93-96	60806398	**CA006**	ANTERIORE
1.9 D (159.AG) - 1.9 TD (159.AQ)		91-96	60806398	**CA006**	ANTERIORE
1.9 TD (159.AI, 159.BI, 159.CU, 159.AU)		91-95	60806398	**CA006**	ANTERIORE
2.0 i.e. (159.AP) - 2.0 i.e. 4x4 (159.AP)		91-95	60806398	**CA006**	ANTERIORE

CUSCINETTI AMMORTIZZATORE
SHOCKABSORBER BEARING
ROULEMENTS AMORTISSEURS

follows FIAT

MODELLO	DIMENSIONI	ANNO	RIF ORIGINALE	RIF CORAM	NOTE
TIPO					
1.1 (160.AA)		88-91	60806398	**CA006**	ANTERIORE
1.4 (160.AC) - 1.4 i.e.		87-95	60806398	**CA006**	ANTERIORE
1.4 i.e (160.AP, 160.AD, 160.EA)		89-95	60806398	**CA006**	ANTERIORE
1.6 (160.AE) - 1.6 i.e.		88-91	60806398	**CA006**	ANTERIORE
1.6 i.e. (160.A1, 160.EC, 160.EB)		92-95	60806398	**CA006**	ANTERIORE
1.6 i.e. (160.AF)		90-93	60806398	**CA006**	ANTERIORE
1.7 D (160.AG)		88-94	60806398	**CA006**	ANTERIORE
1.8 i.e. - 1.8 i.e. (160.AM)		90-95	60806398	**CA006**	ANTERIORE
1.8 i.e. (160.AY) - 1.8 i.e. (160.ED)		90-95	60806398	**CA006**	ANTERIORE
1.8 i.e. 16V Sport		89-92	60806398	**CA006**	ANTERIORE
1.9 D		91-96	60806398	**CA006**	ANTERIORE
1.9 TD (160.AW)		92-93	60806398	**CA006**	ANTERIORE
1.9 TD (160.EL, 160.GL, 160.AQ,160.EI,160.AR)		90-95	60806398	**CA006**	ANTERIORE
2.0 16V (160.AV)		91-95	60806398	**CA006**	ANTERIORE
2.0 i.e. (160.AT, 160.AJ)		90-95	60806398	**CA006**	ANTERIORE
2.0 i.e. 16V Sport (160.EF)		93-95	60806398	**CA006**	ANTERIORE
ULYSSE					
1.8 (220.BB5)		97-02	1303672080	**CA014**	ANTERIORE
1.9 TD (220AH5)		95-02	1303672080	**CA014**	ANTERIORE
2.0 (220.AC5)		94->	1303672080	**CA014**	ANTERIORE
2.0 JTD		02->	1303672080	**CA014**	ANTERIORE
2.0 16V		98-00	1303672080	**CA014**	ANTERIORE
2.0 Turbo (220.AD5)		94-02	1303672080	**CA014**	ANTERIORE
2.1 TD		96-99	1303672080	**CA014**	ANTERIORE
2.2 JTD		02->	1303672080	**CA014**	ANTERIORE
3.0 V6		02->	1303672080	**CA014**	ANTERIORE
UNO (146A/E)					
45 (1464.ED)		86-93	4400895	**CA015**	ANTERIORE
0.9 45		83-92	4400895	**CA015**	ANTERIORE
1.0 45 (146A.ED)		86-93	4400895	**CA015**	ANTERIORE
1.0 45 i.e.		84-94	4400895	**CA015**	ANTERIORE
1.1 50		86-93	4400895	**CA015**	ANTERIORE
1.1 50 i.e.		92-93	4400895	**CA015**	ANTERIORE
1.1 55		83-89	4400895	**CA015**	ANTERIORE
1.1 60 (146A.EG)		85-89	4400895	**CA015**	ANTERIORE
1.1 60		89-92	4400895	**CA015**	ANTERIORE
1.3 70		83-89	4400895	**CA015**	ANTERIORE
1.3 Super Diesel		83-92	4400895	**CA015**	ANTERIORE
1.3 Turbo i.e.		85-91	4400895	**CA015**	ANTERIORE
1.4 70 i.e.		89-93	4400895	**CA015**	ANTERIORE
1.4 70 TD		86-90	4400895	**CA015**	ANTERIORE
1.4 Turbo i.e.		89-93	4400895	**CA015**	ANTERIORE
1.5 75 i.e.		85-93	4400895	**CA015**	ANTERIORE
1.6		89-93	4400895	**CA015**	ANTERIORE
1.6 R		92-95	4400895	**CA015**	ANTERIORE
1.7 60 Diesel		86-93	4400895	**CA015**	ANTERIORE
1.9 D		89-94	4400895	**CA015**	ANTERIORE

CUSCINETTI AMMORTIZZATORE
SHOCKABSORBER BEARING
ROULEMENTS AMORTISSEURS

FORD

MODELLO	DIMENSIONI	ANNO	RIF ORIGINALE	RIF CORAM	NOTE
GALAXY (WGR)					
1.9 TDI		95-00	7201688	**CA016**	ANTERIORE
2.0 i		95->	7201688	**CA016**	ANTERIORE
2.3 16V		97->	7201688	**CA016**	ANTERIORE
2.8 i V6		95-00	7201688	**CA016**	ANTERIORE
2.8 i V6 4x4		96-00	7201688	**CA016**	ANTERIORE

LANCIA

DEDRA					
1.6 i.e. (835AB, 835AN)		89-99	60806398	**CA006**	ANTERIORE
1.6 16V (835EI)		96-99	60906398	**CA006**	ANTERIORE
1.6 LE (835EB) Cat.		94-99	60806398	**CA006**	ANTERIORE
1.8 i.e. (835AT, 835BD, 835AD, 835FA)		89-99	60806398	**CA006**	ANTERIORE
1.8 16V LE(835FG)		96-99	60806398	**CA006**	ANTERIORE
1.8 GT 16V (835EH)		96-99	60806398	**CA006**	ANTERIORE
1.9 TDS (835EE, 835EF)		89-99	60806398	**CA006**	ANTERIORE
2.0 16V (835ED)		94-99	60806398	**CA006**	ANTERIORE
2.0 HF Integrale (835AP)		90-94	60806398	**CA006**	ANTERIORE
2.0 i.e.(835AL) - 2.0 i.e Turbo (835AR)		89-99	60806398	**CA006**	ANTERIORE
2.0 i.e. Turbo Integrale (835AO)		90-94	60806398	**CA006**	ANTERIORE
2.0 Turbo (835AQ)		90-94	60806398	**CA006**	ANTERIORE
DEDRA SW					
1.6 (835EB)		94-99	60809398	**CA006**	ANTERIORE
1.6 16V (835EI)		96-99	60809398	**CA006**	ANTERIORE
1.8 i.e. (835FA)		94-99	60809398	**CA006**	ANTERIORE
1.8 16V LE (835FG)		96-99	60809398	**CA006**	ANTERIORE
1.8 GT 16V (835EH)		96-99	60809398	**CA006**	ANTERIORE
1.9 TDS (835EE, 835EF)		94-99	60809398	**CA006**	ANTERIORE
2.0 Integrale (835ED)		94-99	60809398	**CA006**	ANTERIORE
2.0 16V (835ED)		94-99	60809398	**CA006**	ANTERIORE
DELTA I					
2.0 16V HF Evo Integrale (831AB.027)		93-94	60809398	**CA006**	ANTERIORE

CUSCINETTI AMMORTIZZATORE
SHOCKABSORBER BEARING
ROULEMENTS AMORTISSEURS

follows LANCIA

MODELLO	DIMENSIONI	ANNO	RIF ORIGINALE	RIF CORAM	NOTE
DELTA II					
1.4 i.e (836AF, 836AH)		94-99	60809398	**CA006**	ANTERIORE
1.6 i.e (836AD, 836AP)		93-99	60809398	**CA006**	ANTERIORE
1.6 i.e 16V (836AO)		96-99	60809398	**CA006**	ANTERIORE
1.8 i.e (836AE, 836AG, 836AL)		93-99	60809398	**CA006**	ANTERIORE
1.8 i.e 16V (836AQ)		96-99	60809398	**CA006**	ANTERIORE
1.8 i.e 16V GT (836AR)		96-99	60809398	**CA006**	ANTERIORE
1.9 TD (836AM, 836AN)		94-99	60809398	**CA006**	ANTERIORE
2.0 16V (836AA, 836CA)		93-99	60809398	**CA006**	ANTERIORE
2.0 16V Turbo (836AB)		93-99	60809398	**CA006**	ANTERIORE
LYBRA					
1.6 16V (839AXA1A)		99->	5035.29	**CA014**	ANTERIORE
1.8 16V (839AXB1A, 839AXG1A)		99->	5035.29	**CA014**	ANTERIORE
1.9 JTD		99->	5035.29	**CA014**	ANTERIORE
2.0 30V (839AXC11, 839AXC1A, 839AXH1A)		99->	5035.29	**CA014**	ANTERIORE
2.4 JTD		99->	5035.29	**CA014**	ANTERIORE
LYBRA SW					
1.6 16V(839BXA1A)		99->	5035.29	**CA014**	ANTERIORE
1.8 16V(839BXB1A, 839BXG1A)		99->	5035.29	**CA014**	ANTERIORE
1.9 JTD		99->	5035.29	**CA014**	ANTERIORE
2.0 20V(839BXC11,839BXC1A,839BXH1A)		99->	5035.29	**CA014**	ANTERIORE
2.4 JTD		99->	5035.29	**CA014**	ANTERIORE
NUOVA DELTA					
Tutti i tipi/All types/Tous types		93->	60806398	**CA006**	ANTERIORE
PHEDRA					
2.0 (179AXA11)		02->	5035.29	**CA014**	ANTERIORE
2.0 JTD (179AXAB1A)		02->	5035.29	**CA014**	ANTERIORE
2.2 JTD (179AXC1A)		02->	5035.29	**CA014**	ANTERIORE
3.0 V6		02->	5035.29	**CA014**	ANTERIORE
Y (840A)					
1.1 (840AE)		95->	4400895	**CA015**	ANTERIORE

CUSCINETTI AMMORTIZZATORE
SHOCKABSORBER BEARING
ROULEMENTS AMORTISSEURS

follows LANCIA

MODELLO	DIMENSIONI	ANNO	RIF ORIGINALE	RIF CORAM	NOTE
Y10 (156)					
1.0 Fire		85-90	4400895	**CA015**	ANTERIORE
1.0 Fire (156AE) Cat.		87-92	4400895	**CA015**	ANTERIORE
1.0 Fire (156B, 156AD)		85-91	4400895	**CA015**	ANTERIORE
1.0 Fire 4WD		86-90	4400895	**CA015**	ANTERIORE
1.0 Fire 4WD (156AE)		87-92	4400895	**CA015**	ANTERIORE
1.0 Turbo (156D)		85-89	4400895	**CA015**	ANTERIORE
1.1 Avenue (156AG)		95	4400895	**CA015**	ANTERIORE
1.1 Avenue 4 ruote motrici (156AG)		95	4400895	**CA015**	ANTERIORE
1.1 i.e. Fire (156AG)		89-95	4400895	**CA015**	ANTERIORE
1.1 i.e. Fire 4WD (156AG)		92-95	4400895	**CA015**	ANTERIORE
1.3 i.e. Fire (156AB)		87-93	4400895	**CA015**	ANTERIORE
1.3 i.e. Fire (156AF)		89-95	4400895	**CA015**	ANTERIORE
ZETA					
2.0 16V (220AL5)		98-02	5035.29	**CA014**	ANTERIORE
2.0 JTD (220AN5)		99-02	5035.29	**CA014**	ANTERIORE
2.0 Turbo (220AD5, 220CD5)		95-02	5035.29	**CA014**	ANTERIORE
2.1 TD (220AJ5)		96-99	5035.29	**CA014**	ANTERIORE

MITSUBISHI

L 300					
2.5 D (P15T)		94->		**CA014**	ANTERIORE

OPEL

MOVANO Pianale piatto/Autotelaio					
2.8 DTI		98-01	9151063380	**CA009**	ANTERIORE

CUSCINETTI AMMORTIZZATORE
SHOCKABSORBER BEARING
ROULEMENTS AMORTISSEURS

PEUGEOT

MODELLO	DIMENSIONI	ANNO	RIF ORIGINALE	RIF CORAM	NOTE
106 I					
1.0		91->	5035.27	**CA009**	ANTERIORE
1.1		91-96	5035.27	**CA009**	ANTERIORE
1.3		93-96	5035.27	**CA009**	ANTERIORE
1.4		91-96	5035.27	**CA009**	ANTERIORE
1.4 D		92-96	5035.27	**CA009**	ANTERIORE
1.5 D		94-96	5035.27	**CA009**	ANTERIORE
1.6		94-96	5035.27	**CA009**	ANTERIORE
106 II					
1.0 i - 1.1 i - 1.4 i		96->	5035.27	**CA009**	ANTERIORE
1.5 D - 1.6 i - 1.6 S16		96->	5035.27	**CA009**	ANTERIORE
205 I					
1.0		83->	5035.27	**CA009**	ANTERIORE
1.1		83-87	5035.27	**CA009**	ANTERIORE
1.4		83-87	5035.27	**CA009**	ANTERIORE
1.6		86-87	5035.27	**CA009**	ANTERIORE
1.6 GTI		84-87	5035.27	**CA009**	ANTERIORE
1.7 Diesel		83-87	5035.27	**CA009**	ANTERIORE
1.9 GTI		86-87	5035.27	**CA009**	ANTERIORE
205 I Cabriolet					
1.1 CJ		89-94	5035.27	**CA009**	ANTERIORE
1.4 CJ		88-94	5035.27	**CA009**	ANTERIORE
1.4 C Cat.		89-93	5035.27	**CA009**	ANTERIORE
1.4 CT		86-88	5035.27	**CA009**	ANTERIORE
1.6 CJ		92-94	5035.27	**CA009**	ANTERIORE
1.6 CTI		86-90	5035.27	**CA009**	ANTERIORE
1.9 CTI		87-94	5035.27	**CA009**	ANTERIORE
205 II					
1.0 - 1.1		87-98	5035.27	**CA009**	ANTERIORE
1.3 Rallye		87-90	5035.27	**CA009**	ANTERIORE
1.4		87-98	5035.27	**CA009**	ANTERIORE
1.4 Cat.		89-93	5035.27	**CA009**	ANTERIORE
1.6		87-98	5035.27	**CA009**	ANTERIORE
1.6 Aut.		90-98	5035.27	**CA009**	ANTERIORE
1.6 GTI		87-89	5035.27	**CA009**	ANTERIORE
1.7 Diesel		87-89	5035.27	**CA009**	ANTERIORE
1.9 Diesel - 1.9 GTI		87-89	5035.27	**CA009**	ANTERIORE
1.9 GTI Cat.		87-94	5035.27	**CA009**	ANTERIORE

CUSCINETTI AMMORTIZZATORE
SHOCKABSORBER BEARING
ROULEMENTS AMORTISSEURS

follows PEUGEOT

MODELLO	DIMENSIONI	ANNO	RIF ORIGINALE	RIF CORAM	NOTE
206					
1.1 i - 1.4 i		98->	5035.27	**CA009**	ANTERIORE
1.6 i		98-00	5035.27	**CA009**	ANTERIORE
1.9 D		98-01	5035.27	**CA009**	ANTERIORE
305 II					
1.3		82-85	5035.27	**CA009**	ANTERIORE
1.5		85-90	5035.27	**CA009**	ANTERIORE
1.6		82-88	5035.27	**CA009**	ANTERIORE
1.9		82-88	5035.27	**CA009**	ANTERIORE
1.9 Diesel		82-88	5035.27	**CA009**	ANTERIORE
305 Break					
1.3		82-86	5035.27	**CA009**	ANTERIORE
1.5		82-86	5035.27	**CA009**	ANTERIORE
1.6		83-88	5035.27	**CA009**	ANTERIORE
1.9		84-88	5035.27	**CA009**	ANTERIORE
1.9 Diesel		82-88	5035.27	**CA009**	ANTERIORE
306					
1.9 D		98->	5035.29	**CA014**	ANTERIORE
1.1		94->	5035.27	**CA009**	ANTERIORE
1.4 SL		94->	5035.27	**CA009**	ANTERIORE
1.6 SR		94-00	5035.27	**CA009**	ANTERIORE
1.8 16V		97->	5035.27	**CA009**	ANTERIORE
1.8 ST		94->	5035.27	**CA009**	ANTERIORE
1.9 D		98->	5035.27	**CA009**	ANTERIORE
1.9 SLD		94->	5035.27	**CA009**	ANTERIORE
1.9 SRDT		94->	5035.27	**CA009**	ANTERIORE
2.0		97->	5035.27	**CA009**	ANTERIORE
2.0 S16		94->	5035.27	**CA009**	ANTERIORE
306 Break					
1.4		97->	5035.27	**CA009**	ANTERIORE
1.6		97-00	5035.27	**CA009**	ANTERIORE
1.8 16V		97->	5035.27	**CA009**	ANTERIORE
1.9 D		97->	5035.27	**CA009**	ANTERIORE
1.9 TD		97->	5035.27	**CA009**	ANTERIORE
2.0		97->	5035.27	**CA009**	ANTERIORE
2.0 HDI 90		99->	5035.27	**CA009**	ANTERIORE

CUSCINETTI AMMORTIZZATORE
SHOCKABSORBER BEARING
ROULEMENTS AMORTISSEURS

follows PEUGEOT

MODELLO	DIMENSIONI	ANNO	RIF ORIGINALE	RIF CORAM	NOTE
306 Cabriolet					
1.6		96-00	5035.27	**CA009**	ANTERIORE
1.8		94->	5035.27	**CA009**	ANTERIORE
1.8 16V		00->	5035.27	**CA009**	ANTERIORE
2.0		94->	5035.27	**CA009**	ANTERIORE
2.0 16V		97->	5035.27	**CA009**	ANTERIORE
306 Coda Spiovente					
1.1 - 1.4		93->	5035.27	**CA009**	ANTERIORE
1.6		93-00	5035.27	**CA009**	ANTERIORE
1.8		93->	5035.27	**CA009**	ANTERIORE
1.8 16V		97->	5035.27	**CA009**	ANTERIORE
1.8 D		93->	5035.27	**CA009**	ANTERIORE
1.9 D		93->	5035.27	**CA009**	ANTERIORE
1.9 TD		93->	5035.27	**CA009**	ANTERIORE
2.0 16V		97->	5035.27	**CA009**	ANTERIORE
2.0 HDI 90		99->	5035.27	**CA009**	ANTERIORE
2.0 S16		93->	5035.27	**CA009**	ANTERIORE
2.0 XSI		93->	5035.27	**CA009**	ANTERIORE
309 I					
1.1		85-89	5035.27	**CA009**	ANTERIORE
1.3		85-89	5035.27	**CA009**	ANTERIORE
1.4		89-89	5035.27	**CA009**	ANTERIORE
1.6		85-89	5035.27	**CA009**	ANTERIORE
1.9		85-89	5035.27	**CA009**	ANTERIORE
1.9 D		86-89	5035.27	**CA009**	ANTERIORE
1.9 GTI		86-89	5035.27	**CA009**	ANTERIORE
309 II					
1.1		90-93	5035.27	**CA009**	ANTERIORE
1.4		89-93	5035.27	**CA009**	ANTERIORE
1.6		89-93	5035.27	**CA009**	ANTERIORE
1.8 Diesel		89-93	5035.27	**CA009**	ANTERIORE
1.9		89-93	5035.27	**CA009**	ANTERIORE
1.9 Diesel		89-93	5035.27	**CA009**	ANTERIORE
1.9 GTI		89-93	5035.27	**CA009**	ANTERIORE
1.9 GTI 16V		89-90	5035.27	**CA009**	ANTERIORE
405 I					
1.6		87-92	5035.27	**CA009**	ANTERIORE
1.8 Turbo Diesel		88-92	5035.27	**CA009**	ANTERIORE
1.9		87-92	5035.27	**CA009**	ANTERIORE
1.9 Diesel		88-92	5035.27	**CA009**	ANTERIORE
1.9 Injection		87-92	5035.27	**CA009**	ANTERIORE

CUSCINETTI AMMORTIZZATORE
SHOCKABSORBER BEARING
ROULEMENTS AMORTISSEURS

follows PEUGEOT

MODELLO	DIMENSIONI	ANNO	RIF ORIGINALE	RIF CORAM	NOTE
405 I Break					
1.6		88-92	5035.27	**CA009**	ANTERIORE
1.8 TD		88-92	5035.27	**CA009**	ANTERIORE
1.9		88-92	5035.27	**CA009**	ANTERIORE
1.9 D		88-92	5035.27	**CA009**	ANTERIORE
405 II					
1.4		92-95	5035.27	**CA009**	ANTERIORE
1.6		92-95	5035.27	**CA009**	ANTERIORE
1.8		92-95	5035.27	**CA009**	ANTERIORE
1.9 D		92-95	5035.27	**CA009**	ANTERIORE
1.9 TD		92-95	5035.27	**CA009**	ANTERIORE
2.0		92-95	5035.27	**CA009**	ANTERIORE
2.0 X4		92-95	5035.27	**CA009**	ANTERIORE
2.0 16V		94-95	5035.27	**CA009**	ANTERIORE
2.0 MI-16		92-95	5035.27	**CA009**	ANTERIORE
2.0 T 16 X4		92-95	5035.27	**CA009**	ANTERIORE
405 II Break					
1.4 - 1.6 -1.8		92-96	5035.27	**CA009**	ANTERIORE
1.9 D		92-96	5035.27	**CA009**	ANTERIORE
1.9 TD		92-96	5035.27	**CA009**	ANTERIORE
2.0		92-96	5035.27	**CA009**	ANTERIORE
505					
2.2 Turbo Injection		84-88	5035.20	**CA009**	ANTERIORE
2.8 GTI V6		86-93	5035.20	**CA009**	ANTERIORE
806					
1.8		95-02	5035.29	**CA014**	ANTERIORE
1.9 TD		95-02	5035.29	**CA014**	ANTERIORE
2.0		94-02	5035.29	**CA014**	ANTERIORE
2.0 16V		98-02	5035.29	**CA014**	ANTERIORE
2.0 HDI		99-02	5035.29	**CA014**	ANTERIORE
2.0 Turbo		94-02	5035.29	**CA014**	ANTERIORE
2.1 TD 12V		96-99	5035.29	**CA014**	ANTERIORE
807					
2.0		02->	5035.29	**CA014**	ANTERIORE
2.0 Hdi FAP		02->	5035.29	**CA014**	ANTERIORE
2.2		02->	5035.29	**CA014**	ANTERIORE
2.2 Hdi FAP		02->	5035.29	**CA014**	ANTERIORE
3.0 V6		02->	5035.29	**CA014**	ANTERIORE

CUSCINETTI AMMORTIZZATORE
SHOCKABSORBER BEARING
ROULEMENTS AMORTISSEURS

follows PEUGEOT

MODELLO	DIMENSIONI	ANNO	RIF ORIGINALE	RIF CORAM	NOTE
BOXER Autobus (230P)					
1.9 D		94-02	5035.30	**CA012**	ANTERIORE
1.9 TD		94-02	5035.30	**CA012**	ANTERIORE
1.9 TD 4x4		96-02	5035.30	**CA012**	ANTERIORE
BOXER Autobus (244,Z_)					
2.0		02->	5035.30	**CA012**	ANTERIORE
BOXER Autobus (230P)					
2.0 i		94-02	5035.30	**CA012**	ANTERIORE
2.0 i 4x4		96-02	5035.30	**CA012**	ANTERIORE
BOXER Autobus (244,Z_)					
2.0 HDI		02->	5035.30	**CA012**	ANTERIORE
2.2 HDI		02->	5035.30	**CA012**	ANTERIORE
BOXER Autobus (230P)					
2.5 D		94-02	5035.30	**CA012**	ANTERIORE
2.5 D 4x4		96-02	5035.30	**CA012**	ANTERIORE
2.5 TD		94-02	5035.30	**CA012**	ANTERIORE
2.5 TD 4x4		96-02	5035.30	**CA012**	ANTERIORE
2.5 TDI		97-02	5035.30	**CA012**	ANTERIORE
2.5 TDI 4x4		97-02	5035.30	**CA012**	ANTERIORE
2.8 HDI		00-02	5035.30	**CA012**	ANTERIORE
BOXER Autobus (244,Z_)					
2.8 HDI		02->	5035.30	**CA012**	ANTERIORE
2.8 HDI 4x4		02->	5035.30	**CA012**	ANTERIORE
BOXER Furgonato (230L)					
1.9 D		94-02	5035.30	**CA012**	ANTERIORE
1.9 TD		94-02	5035.30	**CA012**	ANTERIORE
BOXER Furgonato (244)					
2.0		02->	5035.30	**CA012**	ANTERIORE

CUSCINETTI AMMORTIZZATORE
SHOCKABSORBER BEARING
ROULEMENTS AMORTISSEURS

follows PEUGEOT

MODELLO	DIMENSIONI	ANNO	RIF ORIGINALE	RIF CORAM	NOTE
BOXER Furgonato (230L)					
2.0 i		94-02	5035.30	**CA012**	ANTERIORE
2.0 HDI		01-02	5035.30	**CA012**	ANTERIORE
BOXER Furgonato (244)					
2.0 HDI		02->	5035.30	**CA012**	ANTERIORE
2.2 HDI		02->	5035.30	**CA012**	ANTERIORE
BOXER Furgonato (230L)					
2.5 D		94-02	5035.30	**CA012**	ANTERIORE
2.5 D 4x4		99-02	5035.30	**CA012**	ANTERIORE
2.5 TD		94-02	5035.30	**CA012**	ANTERIORE
2.5 TDI		97-02	5035.30	**CA012**	ANTERIORE
2.5 TDI 4x4		99-02	5035.30	**CA012**	ANTERIORE
2.8 HDI		00-02	5035.30	**CA012**	ANTERIORE
BOXER Furgonato (244)					
2.8 HDI		02->	5035.30	**CA012**	ANTERIORE
2.8 HDI 4x4		02->	5035.30	**CA012**	ANTERIORE
BOXER Pianale piatto/Autotelaio					
1.9 TD		96-02	5035.30	**CA012**	ANTERIORE
BOXER Pianale piatto/Autot.(244)					
2.0 HDI		02->	5035.30	**CA012**	ANTERIORE
BOXER Pianale piatto/Autotelaio					
2.0 i		94-02	5035.30	**CA012**	ANTERIORE
BOXER Pianale piatto/Autot.(244)					
2.2 HDI		02->	5035.30	**CA012**	ANTERIORE
BOXER Pianale piatto/Autotelaio					
2.5 D		94-02	5035.30	**CA012**	ANTERIORE
2.5 D 4x4		99-02	5035.30	**CA012**	ANTERIORE
2.5 TD		94-02	5035.30	**CA012**	ANTERIORE
2.5 TDI		97-02	5035.30	**CA012**	ANTERIORE
2.5 TDI 4x4		99-02	5035.30	**CA012**	ANTERIORE
2.8 HDI		00-02	5035.30	**CA012**	ANTERIORE

CUSCINETTI AMMORTIZZATORE
SHOCKABSORBER BEARING
ROULEMENTS AMORTISSEURS

follows PEUGEOT

MODELLO	DIMENSIONI	ANNO	RIF ORIGINALE	RIF CORAM	NOTE
BOXER Pianale piatto/Autot.(244)					
2.8 HDI		02->	5035.30	**CA012**	ANTERIORE
2.8 HDI 4x4		02->	5035.30	**CA012**	ANTERIORE
EXPERT					
1.6		96->	5035.29	**CA014**	ANTERIORE
1.9 D -1.9 TD		96->	5035.29	**CA014**	ANTERIORE
2.0 - 2.0 HDI		00->	5035.29	**CA014**	ANTERIORE
EXPERT Furgonato					
1.6		96->	5035.29	**CA014**	ANTERIORE
1.9 D - 1.9 TD		96->	5035.29	**CA014**	ANTERIORE
2.0 HDI		00->	5035.29	**CA014**	ANTERIORE
EXPERT Pianale piatto/Autotelaio					
1.6		96->	5035.29	**CA014**	ANTERIORE
1.9 D - 1.9 TD		96->	5035.29	**CA014**	ANTERIORE
PARTNER Combispace					
1.1		96->	5035.27	**CA009**	ANTERIORE
1.4		96->	5035.27	**CA009**	ANTERIORE
1.8		97->	5035.27	**CA009**	ANTERIORE
1.9 D		96->	5035.27	**CA009**	ANTERIORE
PARTNER Furgonato					
1.1		96->	5035.27	**CA009**	ANTERIORE
1.4		96->	5035.27	**CA009**	ANTERIORE
1.8 D		96->	5035.27	**CA009**	ANTERIORE
1.9 D		96->	5035.27	**CA009**	ANTERIORE

PORSCHE

944					
2.5		87-90	9151063380	**CA009**	ANTERIORE

CUSCINETTI AMMORTIZZATORE
SHOCKABSORBER BEARING
ROULEMENTS AMORTISSEURS

RENAULT

MODELLO	DIMENSIONI	ANNO	RIF ORIGINALE	RIF CORAM	NOTE
9					
1.1 (L421)		81-87	7700803635	**CA009**	ANTERIORE
1.2 (L42S)		85-88	7700803635	**CA009**	ANTERIORE
1.4 (L422, L42C)		81-88	7700803635	**CA009**	ANTERIORE
1.4 (L423)		81-85	7700803635	**CA009**	ANTERIORE
1.4 (L423, L42R)		85-88	7700803635	**CA009**	ANTERIORE
1.4 Automatik (L423)		81-85	7700803635	**CA009**	ANTERIORE
1.4 Turbo		86-89	7700803635	**CA009**	ANTERIORE
1.4 Turbo (L425)		84-86	7700803635	**CA009**	ANTERIORE
1.6 D (L424)		82-88	7700803635	**CA009**	ANTERIORE
1.7 (L42F, L42L)		86-88	7700803635	**CA009**	ANTERIORE
1.7 (L426, L42E, L42N)		84-88	7700803635	**CA009**	ANTERIORE
11					
1.1 (B/C371)		83-86	7700803635	**CA009**	ANTERIORE
1.2 (B/C37S)		84-88	7700803635	**CA009**	ANTERIORE
1.4 (B/C372, B/C37C)		83-88	7700803635	**CA009**	ANTERIORE
1.4 (B/C373)		83-85	7700803635	**CA009**	ANTERIORE
1.4 (B/C373, B/C37R)		83-88	7700803635	**CA009**	ANTERIORE
1.4 Turbo (B/C375)		84-88	7700803635	**CA009**	ANTERIORE
1.6 D (B/C374)		83-88	7700803635	**CA009**	ANTERIORE
1.7 (B/C376)		83-87	7700803635	**CA009**	ANTERIORE
1.7 (B/C37D, B/C37E)		87-88	7700803635	**CA009**	ANTERIORE
1.7 (B/C37F, B/C37L, B/C37N)		84-88	7700803635	**CA009**	ANTERIORE
19 I					
1.4 - 1.4(B/C532) Cat.		88-92	7700803635	**CA009**	ANTERIORE
1.4 (B/C53P)		89-89	7700803635	**CA009**	ANTERIORE
1.7 (B/C53B, B/C53C)		88-92	7700803635	**CA009**	ANTERIORE
1.8 16V (B/C53D)		89-92	7700803635	**CA009**	ANTERIORE
1.9 D (B/C534, B/C53J)		88-92	7700803635	**CA009**	ANTERIORE
19 I Cabriolet					
1.7		91-92	7700803635	**CA009**	ANTERIORE
1.8 16V		91-92	7700803635	**CA009**	ANTERIORE
19 I Chamade					
1.4 (L532, L53P)		88-92	7700803635	**CA009**	ANTERIORE
1.7 (L53B, L53C, L53F)		88-92	7700803635	**CA009**	ANTERIORE
1.8 16V (L53D)		89-92	7700803635	**CA009**	ANTERIORE
1.9 D (L534, L53J)		89-92	7700803635	**CA009**	ANTERIORE
1.9 TD(L53K)		90-92	7700803635	**CA009**	ANTERIORE

CUSCINETTI AMMORTIZZATORE
SHOCKABSORBER BEARING
ROULEMENTS AMORTISSEURS

follows RENAULT

MODELLO	DIMENSIONI	ANNO	RIF ORIGINALE	RIF CORAM	NOTE
19 II					
1.4 (B/C532, B/C535)		92-95	7700803635	**CA009**	ANTERIORE
1.7 (B/C53B, B/C53C)		92-95	7700803635	**CA009**	ANTERIORE
1.8 (5/353A)		92-95	7700803635	**CA009**	ANTERIORE
1.8 (5/353F, B/C538)		94-95	7700803635	**CA009**	ANTERIORE
1.8 (B/C538, B/C53Y)		92-95	7700803635	**CA009**	ANTERIORE
1.8 16V (B/C53D)		92-95	7700803635	**CA009**	ANTERIORE
1.9 D (B/C53J)		92-95	7700803635	**CA009**	ANTERIORE
1.9 DTI (B/C53T)		92-95	7700803635	**CA009**	ANTERIORE
19 II Cabriolet					
1.7 (D53C)		92-93	7700803635	**CA009**	ANTERIORE
1.8 (853A)		93-96	7700803635	**CA009**	ANTERIORE
1.8 (D53V, 853F,D53C)		94-96	7700803635	**CA009**	ANTERIORE
1.8 (D53Y)		92-96	7700803635	**CA009**	ANTERIORE
1.8 16V (D53D)		92-96	7700803635	**CA009**	ANTERIORE
19 II Chamade					
1.4 (532)		92-95	7700803635	**CA009**	ANTERIORE
1.4 (L535)		93-95	7700803635	**CA009**	ANTERIORE
1.7 (L53B)		92-95	7700803635	**CA009**	ANTERIORE
1.8 (453A/F)		92-95	7700803635	**CA009**	ANTERIORE
1.8 (L538)		92-94	7700803635	**CA009**	ANTERIORE
1.8 (L53V, L538)		94-95	7700803635	**CA009**	ANTERIORE
1.8 (L53Y)		92-95	7700803635	**CA009**	ANTERIORE
1.8 16V (L53D)		92-95	7700803635	**CA009**	ANTERIORE
1.9 D (L53J) - 1.9 DTI (L53T)		92-95	7700803635	**CA009**	ANTERIORE
21					
1.7 (B48E, B48F)		89-92	7700803635	**CA009**	ANTERIORE
1.9 D (B48H, B481)		89-93	7700803635	**CA009**	ANTERIORE
2.0 (B48R/Y)		90-92	7700803635	**CA009**	ANTERIORE
2.0 4x4 (B48R/Y)		90-92	7700803635	**CA009**	ANTERIORE
2.1 D (B480)		92-94	7700803635	**CA009**	ANTERIORE
2.1 D (B48V/B48O)		89-92	7700803635	**CA009**	ANTERIORE
2.1 Turbo-D (B486, B488, B48V)		89-94	7700803635	**CA009**	ANTERIORE
2.2 (B48K)		89-94	7700803635	**CA009**	ANTERIORE
2.2 4x4 (B48K)		90-94	7700803635	**CA009**	ANTERIORE

CUSCINETTI AMMORTIZZATORE
SHOCKABSORBER BEARING
ROULEMENTS AMORTISSEURS

follows RENAULT

MODELLO	DIMENSIONI	ANNO	RIF ORIGINALE	RIF CORAM	NOTE
21 Familiare					
1.7 (K/S481)		86-93	7700803635	**CA009**	ANTERIORE
1.7 (K/S482)		86-88	7700803635	**CA009**	ANTERIORE
1.7 (K48E)		89-93	7700803635	**CA009**	ANTERIORE
1.7 (K48F) Cat.		88-93	7700803635	**CA009**	ANTERIORE
1.7 (K48M)		86-89	7700803635	**CA009**	ANTERIORE
1.7 (K48N)		87-89	7700803635	**CA009**	ANTERIORE
2.0 (K483)		86-88	7700803635	**CA009**	ANTERIORE
2.0 (K48C)		86-93	7700803635	**CA009**	ANTERIORE
2.0 (K48R)		90-94	7700803635	**CA009**	ANTERIORE
2.1 D (K/S486)		86-90	7700803635	**CA009**	ANTERIORE
2.1 D (K/S48V, K/S48O)		89-92	7700803635	**CA009**	ANTERIORE
2.1 D (K480)		92-95	7700803635	**CA009**	ANTERIORE
2.1 D 4x4 (K486)		88-92	7700803635	**CA009**	ANTERIORE
2.1 Turbo-D (K48A, K48W, K487, K488)		86-93	7700803635	**CA009**	ANTERIORE
2.2 (K48K)		86-93	7700803635	**CA009**	ANTERIORE
2.2 4x4 (K48K)		86-93	7700803635	**CA009**	ANTERIORE
21 Tre volumi					
1.7 (L481)		86-87	7700803635	**CA009**	ANTERIORE
1.7 (L482)		86-93	7700803635	**CA009**	ANTERIORE
1.7 (L48E)		86-94	7700803635	**CA009**	ANTERIORE
1.7 (L48M, L48F)		86-94	7700803635	**CA009**	ANTERIORE
1.7 (L48N)		87-89	7700803635	**CA009**	ANTERIORE
1.9 D (L48H, L481)		89-93	7700803635	**CA009**	ANTERIORE
2.0		91-93	7700803635	**CA009**	ANTERIORE
2.0 (L483)		86-88	7700803635	**CA009**	ANTERIORE
2.0 (L48C)		86-93	7700803635	**CA009**	ANTERIORE
2.0 (L48R)		90-94	7700803635	**CA009**	ANTERIORE
2.0 4x4 (L48R)		89-94	7700803635	**CA009**	ANTERIORE
2.0 Turbo (L485)		87-90	7700803635	**CA009**	ANTERIORE
2.0 Turbo (L48L)		90-92	7700803635	**CA009**	ANTERIORE
2.0 Turbo 4x4		89-93	7700803635	**CA009**	ANTERIORE
2.0 Turbo 4x4 (L48L)		90-92	7700803635	**CA009**	ANTERIORE
2.1 D (L480)		92-94	7700803635	**CA009**	ANTERIORE
2.1 D (L486)		86-89	7700803635	**CA009**	ANTERIORE
2.1 D (L48V, L48O)		89-94	7700803635	**CA009**	ANTERIORE
2.1 Turbo-D (L48A, L48W, L487, L488)		86-94	7700803635	**CA009**	ANTERIORE
2.2 (L48K)		86-94	7700803635	**CA009**	ANTERIORE
2.2 4x4 (L48K)		90-94	7700803635	**CA009**	ANTERIORE
25					
2.4 VS Turbo (B295)		84-90	7601502	**CA006**	ANTERIORE
2.7 V6 Injection		84-89	7601502	**CA006**	ANTERIORE

CUSCINETTI AMMORTIZZATORE
SHOCKABSORBER BEARING
ROULEMENTS AMORTISSEURS

follows RENAULT

MODELLO	DIMENSIONI	ANNO	RIF ORIGINALE	RIF CORAM	NOTE
AVANTIME					
2.0 16V Turbo		01-03	7700803635	**CA009**	ANTERIORE
2.2 DCI		02->	7700803635	**CA009**	ANTERIORE
3.0 V6		01-03	7700803635	**CA009**	ANTERIORE
CLIO I					
1.1		91-98	6001025850	**CA011**	ANTERIORE
1.2 (5/357Y, 5/357K)		96-98	6001025850	**CA011**	ANTERIORE
1.2 (B/C/S577)		96-96	6001025850	**CA011**	ANTERIORE
1.2 (B/C/S57A,B/C57S,5/357F,5/357J, 5/357L, 5/357R)		90-98	6001025850	**CA011**	ANTERIORE
1.2 (B/C57R)		91-96	6001025850	**CA011**	ANTERIORE
1.4		91-98	6001025850	**CA011**	ANTERIORE
1.8 (B/C578,B/C57C,B/C57U)		91-98	6001025850	**CA011**	ANTERIORE
1.8 16V (C57D)		91-94	6001025850	**CA011**	ANTERIORE
1.8 Rsi (B/C579,B/C57H)		93-98	6001025850	**CA011**	ANTERIORE
1.9 D (B/C/S576,B/C/S57L)		91-98	6001025850	**CA011**	ANTERIORE
Williams (B/C57M)		94-98	6001025850	**CA011**	ANTERIORE
CLIO II					
1.2		98->	6001025850	**CA011**	ANTERIORE
1.2 16V (B/CB05)		01->	6001025850	**CA011**	ANTERIORE
1.4 (B/CB0C)		98->	6001025850	**CA011**	ANTERIORE
1.4 16V (B/CB0L,B/CB0P)		99-00	6001025850	**CA011**	ANTERIORE
1.5 DCI (B/CB07,B/C/B08)		01->	6001025850	**CA011**	ANTERIORE
1.6 (B/CB0D)		98->	6001025850	**CA011**	ANTERIORE
1.6 16V (CB0T,CB0H)		98->	6001025850	**CA011**	ANTERIORE
1.9 D (B/CB0E)		98->	6001025850	**CA011**	ANTERIORE
1.9 DTI (B/CB0U)		00->	6001025850	**CA011**	ANTERIORE
V6 Sport (CB1A)		00-02	6001025850	**CA011**	ANTERIORE
ESPACE III					
1.9 DTI (JE0M)		99->	7700803635	**CA009**	ANTERIORE
2.0 (JE0A)		96-00	7700803635	**CA009**	ANTERIORE
2.0 16V (JE0L, JE0N, JE02)		98->	7700803635	**CA009**	ANTERIORE
2.2 12V TD (JE0E, JE0H, JE0P)		96-00	7700803635	**CA009**	ANTERIORE
2.2 DCI (JE0K, JE0S)		00->	7700803635	**CA009**	ANTERIORE
3.0 (JE0D)		96-98	7700803635	**CA009**	ANTERIORE
3.0 V6 24V (JE0G, JE0R)		98->	7700803635	**CA009**	ANTERIORE
KANGOO					
1.2 (KC0A,KC0K,KC0F,KC01)		98->	6001025850	**CA011**	ANTERIORE
1.2 16V (KC03,KC05,KC06,KC0T,KC0W)		01->	6001025850	**CA011**	ANTERIORE
1.4 (KC0C,KC0H,KC0B,KC0M)		98->	6001025850	**CA011**	ANTERIORE
1.6 16V		01->	6001025850	**CA011**	ANTERIORE
1.6 16V 4x4 (KC0P,KC0S,KC0L)		01->	6001025850	**CA011**	ANTERIORE
1.9 DTI (KC0U)		00->	6001025850	**CA011**	ANTERIORE
D 55 1.9 (KC0D)		98->	6001025850	**CA011**	ANTERIORE
D 65 1.9 (KC0E,KC02,KC0J,KC0N)		98->	6001025850	**CA011**	ANTERIORE

CUSCINETTI AMMORTIZZATORE
SHOCKABSORBER BEARING
ROULEMENTS AMORTISSEURS

follows RENAULT

MODELLO	DIMENSIONI	ANNO	RIF ORIGINALE	RIF CORAM	NOTE
KANGOO Express					
1.2 (FC01,FC0A,FC0F)		98->	6001025850	**CA011**	ANTERIORE
1.4 (FC0C,FC0B,FC0H,FC0M)		98->	6001025850	**CA011**	ANTERIORE
1.9 DTI (FC0U)		00->	6001025850	**CA011**	ANTERIORE
D 55 1.9 (FC0D)		98->	6001025850	**CA011**	ANTERIORE
D 65 1.9 (FC0E,FC02,FC0J,FC0N)		98->	6001025850	**CA011**	ANTERIORE
LAGUNA					
1.6 16V (B568, B561)		97-01	7700803635	**CA009**	ANTERIORE
1.8 (B56A/B)		93-01	7700803635	**CA009**	ANTERIORE
1.8 (B56S/T/0)		95-01	7700803635	**CA009**	ANTERIORE
1.8 (B56Z)		95-01	7700803635	**CA009**	ANTERIORE
1.8 16V (B563, B564)		98-01	7700803635	**CA009**	ANTERIORE
1.9 DCI (B56W)		99-01	7700803635	**CA009**	ANTERIORE
1.9 DTI (B56J)		97-01	7700803635	**CA009**	ANTERIORE
2.0 (BC56C/H/N)		93-01	7700803635	**CA009**	ANTERIORE
2.0 16V (B56D/M)		95-01	7700803635	**CA009**	ANTERIORE
2.2 D (B56F/2)		93-01	7700803635	**CA009**	ANTERIORE
2.2 DTI (B569)		96-01	7700803635	**CA009**	ANTERIORE
3.0 (B56E/R, B565)		93-01	7700803635	**CA009**	ANTERIORE
3.0 24V (B56V)		97-01	7700803635	**CA009**	ANTERIORE
LAGUNA Grandtour					
1.6 16V (K568)		97-01	7700803635	**CA009**	ANTERIORE
1.8 (K56S/T/0, K56Z)		95-01	7700803635	**CA009**	ANTERIORE
1.8 16V (K563, K564)		98-01	7700803635	**CA009**	ANTERIORE
1.9 DCI (K56W)		99-01	7700803635	**CA009**	ANTERIORE
1.9 DTI (K56J)		97-01	7700803635	**CA009**	ANTERIORE
2.0 (K56C/H)		95-01	7700803635	**CA009**	ANTERIORE
2.0 16V (K56D/M)		95-01	7700803635	**CA009**	ANTERIORE
2.2 D (K56F/2, S56F)		95-01	7700803635	**CA009**	ANTERIORE
2.2 DTI (K569)		96-01	7700803635	**CA009**	ANTERIORE
3.0 (K56R, K565)		96-01	7700803635	**CA009**	ANTERIORE
3.0 24V (K56V)		97-01	7700803635	**CA009**	ANTERIORE
MEGANE Cabriolet					
1.4 16V (EA0D, EA1H, EA0W, EA10)		99->	7700803635	**CA009**	ANTERIORE
1.6 16V (AE0B, AE04, AE11)		99->	7700803635	**CA009**	ANTERIORE
1.6 e (EA0F)		96-99	7700803635	**CA009**	ANTERIORE
2.0 (EA0G)		97->	7700803635	**CA009**	ANTERIORE
2.0 16V (EA0H)		96-99	7700803635	**CA009**	ANTERIORE
2.0 16V IDE (EA03, EA0P,EA14)		99->	7700803635	**CA009**	ANTERIORE
2.0 i (EA0G)		99->	7700803635	**CA009**	ANTERIORE

CUSCINETTI AMMORTIZZATORE
SHOCKABSORBER BEARING
ROULEMENTS AMORTISSEURS

follows RENAULT

MODELLO	DIMENSIONI	ANNO	RIF ORIGINALE	RIF CORAM	NOTE
MEGANE Classic					
1.4 (LA0E, LA0V)		96->	7700803635	**CA009**	ANTERIORE
1.4 16V (LA0D, LA1H, IA0W, LA10)		99->	7700803635	**CA009**	ANTERIORE
1.6 16V (LA04, LA11, LA0B, LA1C, LA1J)		99->	7700803635	**CA009**	ANTERIORE
1.6 e (LA0F, LA0S)		96-99	7700803635	**CA009**	ANTERIORE
1.6 i (LA0L)		96-99	7700803635	**CA009**	ANTERIORE
1.8 16V (LA06, LA12, LA1A, LA1R)		01->	7700803635	**CA009**	ANTERIORE
1.9 D (LA0A, LA0U)		96->	7700803635	**CA009**	ANTERIORE
1.9 DCI (LA05, LA1F)		01->	7700803635	**CA009**	ANTERIORE
1.9 DTI (LA0K, LA0Y)		96->	7700803635	**CA009**	ANTERIORE
1.9 DTI (LA08, LA0N)		97-01	7700803635	**CA009**	ANTERIORE
1.9 DTI (LA1U)		01->	7700803635	**CA009**	ANTERIORE
2.0 i (LA07, LA0G)		96->	7700803635	**CA009**	ANTERIORE
MEGANE Coach					
1.4 16V (DA0D, DA1H, DA0W, DA10)		99->	7700803635	**CA009**	ANTERIORE
1.6 16V (DA0B, DA04, DA11)		99->	7700803635	**CA009**	ANTERIORE
1.6 e (DA0F)		96-99	7700803635	**CA009**	ANTERIORE
1.9 DCI (DA05, DA1F)		01->	7700803635	**CA009**	ANTERIORE
1.9 DTI (DA0N)		97-01	7700803635	**CA009**	ANTERIORE
2.0 16V (DA0H)		96-99	7700803635	**CA009**	ANTERIORE
2.0 16V IDE (DA03, DA0P, DA14)		99->	7700803635	**CA009**	ANTERIORE
2.0 i (DA0G)		96->	7700803635	**CA009**	ANTERIORE
MEGANE Grandtour					
1.4 16V (KA0D, KA1H, KA0W, KA10)		99->	7700803635	**CA009**	ANTERIORE
1.4 e (KA0V)		99->	7700803635	**CA009**	ANTERIORE
1.6 16V (KA0B, KA04, KA11)		99->	7700803635	**CA009**	ANTERIORE
1.6 e (KA0F)		99->	7700803635	**CA009**	ANTERIORE
1.8 16V (KA0S, KA12, KA1A, KA1R)		01->	7700803635	**CA009**	ANTERIORE
1.9 D		99->	7700803635	**CA009**	ANTERIORE
1.9 DCI (KA0D, KA1F)		01->	7700803635	**CA009**	ANTERIORE
1.9 DTI (KA0N)		99-01	7700803635	**CA009**	ANTERIORE
1.9 DTI (KA1U)		01->	7700803635	**CA009**	ANTERIORE
MEGANE I					
1.4 16V (BA0D, BA1H, BA0W, BA10)		99->	7700803635	**CA009**	ANTERIORE
1.4 e (BA0E, BA0V)		96->	7700803635	**CA009**	ANTERIORE
1.4 Eco (BA0T)		96-99	7700803635	**CA009**	ANTERIORE
1.6 16V (BA11, BA04, BA0B, BA1J)		99->	7700803635	**CA009**	ANTERIORE
1.6 e (BA0F, BA0S)		96-99	7700803635	**CA009**	ANTERIORE
1.6 i (BA0L)		96-99	7700803635	**CA009**	ANTERIORE
1.8 16V (BA06, BA12, BA1A, BA1M, BA1R)		01->	7700803635	**CA009**	ANTERIORE
1.9 D Eco (B/SA0U, BA0A)		96->	7700803635	**CA009**	ANTERIORE
1.9 DCI (BA05, BA1F)		01->	7700803635	**CA009**	ANTERIORE
1.9 DT (B/SA0K, B/SA0Y)		96->	7700803635	**CA009**	ANTERIORE
1.9 DTI (BA08, BA0N)		97-01	7700803635	**CA009**	ANTERIORE
1.9 DTI (BA1U)		01->	7700803635	**CA009**	ANTERIORE
2.0 16V (BA0H)		96->	7700803635	**CA009**	ANTERIORE
2.0 i (BA0G)		96->	7700803635	**CA009**	ANTERIORE

CUSCINETTI AMMORTIZZATORE
SHOCKABSORBER BEARING
ROULEMENTS AMORTISSEURS

follows RENAULT

MODELLO	DIMENSIONI	ANNO	RIF ORIGINALE	RIF CORAM	NOTE
MEGANE Scenic					
1.4 i (JA0E)		97-99	7700803635	**CA009**	ANTERIORE
1.6 e (JA0F)		97-99	7700803635	**CA009**	ANTERIORE
1.6 i (JA0L)		97-99	7700803635	**CA009**	ANTERIORE
1.9 DT (JA0D, JA0Y)		97-99	7700803635	**CA009**	ANTERIORE
1.9 DTI (JA0N)		97-99	7700803635	**CA009**	ANTERIORE
2.0 i (JA0G)		97-99	7700803635	**CA009**	ANTERIORE
NEVADA					
Tutti i tipi/All types/Tous types		90->	5035.27	**CA009**	ANTERIORE
R 21					
Tutti i tipi/All types/Tous types		90->	5035.27	**CA009**	ANTERIORE
RAPID Furgonato					
1.2 (F406, G40A)		91-98	7700803635	**CA009**	ANTERIORE
1.4 (F402)		85-91	7700803635	**CA009**	ANTERIORE
1.4 (F407) Cat.		88-98	7700803635	**CA009**	ANTERIORE
1.4 (F40D)		94-98	7700803635	**CA009**	ANTERIORE
1.4 (F40M)		86-91	7700803635	**CA009**	ANTERIORE
1.4 (F40U, F40V)		91-98	7700803635	**CA009**	ANTERIORE
1.6 D (F404)		86-98	7700803635	**CA009**	ANTERIORE
1.9 D (F40R)		94-98	7700803635	**CA009**	ANTERIORE
SAFRANE					
Tutti i tipi/All types/Tous types		92->	5035.27	**CA009**	ANTERIORE
SAFRANE I					
2.0 12V (B542, B54E)		92-96	7700803635	**CA009**	ANTERIORE
2.1 DTI (B546)		93-96	7700803635	**CA009**	ANTERIORE
2.2 (B541, B543)		92-96	7700803635	**CA009**	ANTERIORE
2.5 DTI (B548)		92-96	7700803635	**CA009**	ANTERIORE
3.0 Biturbo 4x4 (B545)		93-96	7700803635	**CA009**	ANTERIORE
3.0 V6 (B54B, B544)		92-96	7700803635	**CA009**	ANTERIORE
3.0 V6 4x4 (B54B, B544)		92-96	7700803635	**CA009**	ANTERIORE
SAFRANE II					
2.0 16V (B54L)		96-00	7700803635	**CA009**	ANTERIORE
2.2 DTI (B54G)		96-00	7700803635	**CA009**	ANTERIORE
2.5 20V (B54F)		96-00	7700803635	**CA009**	ANTERIORE
2.9 24V (B54N)		99-00	7700803635	**CA009**	ANTERIORE
3.0 V6		96-00	7700803635	**CA009**	ANTERIORE

CUSCINETTI AMMORTIZZATORE
SHOCKABSORBER BEARING
ROULEMENTS AMORTISSEURS

follows RENAULT

MODELLO	DIMENSIONI	ANNO	RIF ORIGINALE	RIF CORAM	NOTE
SCENIC					
1.4 16V (JA0D, JA1H, JA0W, JA10)		99->	7700803635	**CA009**	ANTERIORE
1.6 16V (JA0B, JA04, JA11)		99->	7700803635	**CA009**	ANTERIORE
1.8 16V (JA12, JA1R, JA1M, JA1A)		01->	7700803635	**CA009**	ANTERIORE
1.9 DCI (JA05, JA1F)		00->	7700803635	**CA009**	ANTERIORE
1.9 DTI (JA0N)		99->	7700803635	**CA009**	ANTERIORE
1.9 DTI (JA1U)		01->	7700803635	**CA009**	ANTERIORE
2.0 16V (JA1B, JA1D)		00->	7700803635	**CA009**	ANTERIORE
2.0 16V IDE		99->	7700803635	**CA009**	ANTERIORE
2.0 16V RX4		00->	7700803635	**CA009**	ANTERIORE
SUPER 5					
1.0 (B/C/400)		84-88	7700803635	**CA009**	ANTERIORE
1.1 (B/C/401)		84-88	7700803635	**CA009**	ANTERIORE
1.1 (B/C/401, B/C40H)		86-95	7700803635	**CA009**	ANTERIORE
1.4 (B/C/407) Cat.		85-96	7700803635	**CA009**	ANTERIORE
1.4 (B/C402)		84-88	7700803635	**CA009**	ANTERIORE
1.4 (B/C403)		84-89	7700803635	**CA009**	ANTERIORE
1.4 (B/C40J)		87-89	7700803635	**CA009**	ANTERIORE
1.4 (B/C40M)		87-90	7700803635	**CA009**	ANTERIORE
1.4 Turbo (C405)		85-90	7700803635	**CA009**	ANTERIORE
1.6 D (B/C/404)		85-96	7700803635	**CA009**	ANTERIORE
1.7 (B/C408)		86-95	7700803635	**CA009**	ANTERIORE
1.7 i (C409)		86-91	7700803635	**CA009**	ANTERIORE
TRAFIC Autobus (TXW)					
2.2 4x4		89-94	4400895	**CA015**	ANTERIORE
TWINGO					
1.2 (C063, C064)		93-96	6001025850	**CA011**	ANTERIORE
1.2 (C066, C068, C067)		96->	6001025850	**CA011**	ANTERIORE
1.2 16V (C06C,C06D,C06K)		01->	6001025850	**CA011**	ANTERIORE

CUSCINETTI AMMORTIZZATORE
SHOCKABSORBER BEARING
ROULEMENTS AMORTISSEURS

SEAT

MODELLO	DIMENSIONI	ANNO	RIF ORIGINALE	RIF CORAM	NOTE
ALAHAMBRA (7V8, 7V9)					
1.8 T 20V		97->	1J0412249	**CA016**	ANTERIORE
1.9 TDI		96-00	1J0412249	**CA016**	ANTERIORE
1.9 TDI 4motion		01->	1J0412249	**CA016**	ANTERIORE
2.0 i		96->	1J0412249	**CA016**	ANTERIORE
2.8 V6		00->	1J0412249	**CA016**	ANTERIORE
2.8 V6 4motion		01->	1J0412249	**CA016**	ANTERIORE
AROSA (6H)					
1.0		97->	1J0412249	**CA016**	ANTERIORE
1.4		97->	1J0412249	**CA016**	ANTERIORE
1.4 16V		00->	1J0412249	**CA016**	ANTERIORE
1.4 TDI		00->	1J0412249	**CA016**	ANTERIORE
1.7 SDI		97->	1J0412249	**CA016**	ANTERIORE
CORDOBA (6K2/C2)					
1.0 i		96-99	1J0412249	**CA016**	ANTERIORE
1.4 i		94-99	1J0412249	**CA016**	ANTERIORE
1.4 i		94-99	SE021156011A	**CA017**	ANTERIORE
1.4 i 16V		96-99	1J0412249	**CA016**	ANTERIORE
1.6 i -1.8 i		93-99	1J0412249	**CA016**	ANTERIORE
1.6 i -1.8 i		93-99	SE021156011A	**CA017**	ANTERIORE
1.8 i 16V		93-96	1J0412249	**CA016**	ANTERIORE
1.8 i 16V		93-96	SE021156011A	**CA017**	ANTERIORE
1.9 D - 1.9 TD		93-96	1J0412249	**CA016**	ANTERIORE
1.9 D - 1.9 TD		93-96	SE021156011A	**CA017**	ANTERIORE
1.9 SDI		96-99	1J0412249	**CA016**	ANTERIORE
1.9 TDI		96-99	1J0412249	**CA016**	ANTERIORE
2.0 i		93-99	1J0412249	**CA016**	ANTERIORE
2.0 i		93-99	SE021156011A	**CA017**	ANTERIORE
2.0 i 16V		96-99	1J0412249	**CA016**	ANTERIORE
CORDOBA Vario (6K5)					
1.4 i		96-99	1J0412249	**CA016**	ANTERIORE
1.6 i		96-99	1J0412249	**CA016**	ANTERIORE
1.7 SDI		97-99	1J0412249	**CA016**	ANTERIORE
1.9 SDI		96-99	1J0412249	**CA016**	ANTERIORE
1.9 TDI		96-99	1J0412249	**CA016**	ANTERIORE
IBIZA I (021A)					
1.2		84-93	4400895	**CA015**	ANTERIORE
1.5		84-93	4400895	**CA015**	ANTERIORE
1.7 D		84-93	4400895	**CA015**	ANTERIORE

CUSCINETTI AMMORTIZZATORE
SHOCKABSORBER BEARING
ROULEMENTS AMORTISSEURS

follows SEAT

MODELLO	DIMENSIONI	ANNO	RIF ORIGINALE	RIF CORAM	NOTE
IBIZA II (6K1)					
1.0		93-96	1J0412249	**CA016**	ANTERIORE
1.0		93-96	SE021156011A	**CA017**	ANTERIORE
1.0 i		96-99	1J0412249	**CA016**	ANTERIORE
1.3 i - 1.4 i - 1.6 i - 1.8 i		93-99	1J0412249	**CA016**	ANTERIORE
1.3 i - 1.4 i - 1.6 i - 1.8 i		93-99	SE021156011A	**CA017**	ANTERIORE
1.4 i 16V		66-99	1J0412249	**CA016**	ANTERIORE
1.8 i 16V		93-96	1J0412249	**CA016**	ANTERIORE
1.8 i 16V		93-96	SE021156011A	**CA017**	ANTERIORE
1.9 D		93-96	1J0412249	**CA016**	ANTERIORE
1.9 D		94-96	SE021156011A	**CA017**	ANTERIORE
1.9 SDI		96-99	1J0412249	**CA016**	ANTERIORE
1.9 TD		93-96	1J0412249	**CA016**	ANTERIORE
1.9 TDI		96-99	1J0412249	**CA016**	ANTERIORE
2.0 i		93-99	1J0412249	**CA016**	ANTERIORE
2.0 i		93-99	SE021156011A	**CA017**	ANTERIORE
2.0 i 16V		96-99	1J0412249	**CA016**	ANTERIORE
INCA (6K9)					
1.4 16V		00->	1J0412249	**CA016**	ANTERIORE
1.4 i		95->	1J0412249	**CA016**	ANTERIORE
1.6 i		95-98	1J0412249	**CA016**	ANTERIORE
1.7 D		96->	1J0412249	**CA016**	ANTERIORE
1.9 D		95->	1J0412249	**CA016**	ANTERIORE
1.9 SDI		95->	1J0412249	**CA016**	ANTERIORE
1.9 TDI		96->	1J0412249	**CA016**	ANTERIORE
LEON (1M1)					
1.4 16V		99->	1J0412249	**CA016**	ANTERIORE
1.6		99->	1J0412249	**CA016**	ANTERIORE
1.6 16V		00->	1J0412249	**CA016**	ANTERIORE
1.8 20V		99->	1J0412249	**CA016**	ANTERIORE
1.8 20V T		99->	1J0412249	**CA016**	ANTERIORE
1.8 20V T 4		99->	1J0412249	**CA016**	ANTERIORE
1.8 T Cupra R		02->	1J0412249	**CA016**	ANTERIORE
1.8 SDI		99->	1J0412249	**CA016**	ANTERIORE
1.9 TDI		99->	1J0412249	**CA016**	ANTERIORE
1.9 TDI		01->	1J0412249	**CA016**	ANTERIORE
1.9 TDI Syncro		02->	1J0412249	**CA016**	ANTERIORE
2.8 Cupra 4		01->	1J0412249	**CA016**	ANTERIORE
MALAGA (023A)					
1.2		84-93	4400895	**CA015**	ANTERIORE
1.2 i		89-93	4400895	**CA015**	ANTERIORE
1.5		85-93	4400895	**CA015**	ANTERIORE
1.7 D		85-93	4400895	**CA015**	ANTERIORE

CUSCINETTI AMMORTIZZATORE
SHOCKABSORBER BEARING
ROULEMENTS AMORTISSEURS

follows SEAT

MODELLO	DIMENSIONI	ANNO	RIF ORIGINALE	RIF CORAM	NOTE
MARBELLA (28)					
0.8		86-93	4400895	**CA015**	ANTERIORE
0.9		87-93	4400895	**CA015**	ANTERIORE
RONDA (022A)					
1.2		83-86	4400895	**CA015**	ANTERIORE
1.4		82-88	4400895	**CA015**	ANTERIORE
1.5		84-86	4400895	**CA015**	ANTERIORE
1.6		83-85	4400895	**CA015**	ANTERIORE
1.7 Diesel		82-86	4400895	**CA015**	ANTERIORE
TERRA (24)					
0.9		87-96	4400895	**CA015**	ANTERIORE
TOLEDO I (1L)					
1.6 i		91-99	1J0412249	**CA016**	ANTERIORE
1.6 i		91-99	SE021156011A	**CA017**	ANTERIORE
1.8 16V		91-99	1J0412249	**CA016**	ANTERIORE
1.8 16V		91-99	SE021156011A	**CA017**	ANTERIORE
1.8 i		91-96	1J0412249	**CA016**	ANTERIORE
1.8 i		91-96	SE021156011A	**CA017**	ANTERIORE
1.9 D - 1.9 TD		91-99	1J0412249	**CA016**	ANTERIORE
1.9 D - 1.9 TD		91-99	SE021156011A	**CA017**	ANTERIORE
1.9 SDI		95-99	1J0412249	**CA016**	ANTERIORE
1.9 TDI		95-99	1J0412249	**CA016**	ANTERIORE
2.0 i 16V		93-99	1J0412249	**CA016**	ANTERIORE
2.0 i - 2.0 i 16V		91-99	1J0412249	**CA016**	ANTERIORE
2.0 i - 2.0 i 16V		91-99	SE021156011A	**CA017**	ANTERIORE
TOLEDO II (1M2)					
1.6		99-00	1J0412249	**CA016**	ANTERIORE
1.6 16V		00->	1J0412249	**CA016**	ANTERIORE
1.8 20V		99->	1J0412249	**CA016**	ANTERIORE
1.9 TDI		99->	1J0412249	**CA016**	ANTERIORE
2.3 V5		99-01	1J0412249	**CA016**	ANTERIORE

CUSCINETTI AMMORTIZZATORE
SHOCKABSORBER BEARING
ROULEMENTS AMORTISSEURS

SKODA

MODELLO	DIMENSIONI	ANNO	RIF ORIGINALE	RIF CORAM	NOTE
OCTAVIA (1U2)					
1.4		99-01	357412249	**CA016**	ANTERIORE
1.4 16V		00->	357412249	**CA016**	ANTERIORE
1.6		00->	357412249	**CA016**	ANTERIORE
1.6		96-00	357412249	**CA016**	ANTERIORE
1.8		96->	357412249	**CA016**	ANTERIORE
1.8 T		97->	357412249	**CA016**	ANTERIORE
1.8 T 4x4		01->	357412249	**CA016**	ANTERIORE
1.9 SDI		97->	357412249	**CA016**	ANTERIORE
1.9 TDI		96->	357412249	**CA016**	ANTERIORE
2.0		99->	357412249	**CA016**	ANTERIORE
RS 1.8 T		01->	357412249	**CA016**	ANTERIORE
OCTAVIA Combi (1U5)					
1.4 16V		00->	357412249	**CA016**	ANTERIORE
1.6		98->	357412249	**CA016**	ANTERIORE
1.8 20V		98->	357412249	**CA016**	ANTERIORE
1.8 T		98->	357412249	**CA016**	ANTERIORE
1.8 T 4x4		01->	357412249	**CA016**	ANTERIORE
1.9 SDI		98->	357412249	**CA016**	ANTERIORE
1.9 TDI		98->	357412249	**CA016**	ANTERIORE
1.9 TDI 4x4		00->	357412249	**CA016**	ANTERIORE
2.0		99->	357412249	**CA016**	ANTERIORE
2.0 4x4		01->	357412249	**CA016**	ANTERIORE
RS 1.8 T		02->	357412249	**CA016**	ANTERIORE

TOYOTA

LITEACE Furgonato					
1.5 (KM31_V, KM36_V)		86-91	021156017A	**CA017**	ANTERIORE

CUSCINETTI AMMORTIZZATORE
SHOCKABSORBER BEARING
ROULEMENTS AMORTISSEURS

VOLKSWAGEN

MODELLO	DIMENSIONI	ANNO	RIF ORIGINALE	RIF CORAM	NOTE
BORA (1J2)					
1.4 16V		00->	357412249	**CA016**	ANTERIORE
1.6		98->	357412249	**CA016**	ANTERIORE
1.6 16V		00->	357412249	**CA016**	ANTERIORE
1.6 FSI		02->	357412249	**CA016**	ANTERIORE
1.8		98->	357412249	**CA016**	ANTERIORE
1.8 4motion		99->	357412249	**CA016**	ANTERIORE
1.8 T		00->	357412249	**CA016**	ANTERIORE
1.9 SDI		98->	357412249	**CA016**	ANTERIORE
1.9 TDI		98->	357412249	**CA016**	ANTERIORE
1.9 TDI 4motion		99->	357412249	**CA016**	ANTERIORE
2.0		98->	357412249	**CA016**	ANTERIORE
2.0 4motion		00->	357412249	**CA016**	ANTERIORE
2.3 V5		98->	357412249	**CA016**	ANTERIORE
2.3 V5 4motion		98->	357412249	**CA016**	ANTERIORE
2.8 V6 4motion		99->	357412249	**CA016**	ANTERIORE
BORA Station Wagon (1J6)					
1.4 16V		01->	357412249	**CA016**	ANTERIORE
1.6		98->	357412249	**CA016**	ANTERIORE
1.6 16V		00->	357412249	**CA016**	ANTERIORE
1.6 FSI		02->	357412249	**CA016**	ANTERIORE
1.8		00->	357412249	**CA016**	ANTERIORE
1.8 4motion		99->	357412249	**CA016**	ANTERIORE
1.8 T		02->	357412249	**CA016**	ANTERIORE
1.9 TDI - 1.9 TDI 4motion		99->	357412249	**CA016**	ANTERIORE
2.0		99->	357412249	**CA016**	ANTERIORE
2.0 4motion		00->	357412249	**CA016**	ANTERIORE
2.3 V5		99->	357412249	**CA016**	ANTERIORE
2.3 V5 4motion		99->	357412249	**CA016**	ANTERIORE
2.8 V6 4motion		99->	357412249	**CA016**	ANTERIORE
CADDY I (14)					
1.5		82-83	021156017A	**CA017**	ANTERIORE
1.6		83-92	021156017A	**CA017**	ANTERIORE
1.6 D		82-92	021156017A	**CA017**	ANTERIORE
1.8		85-92	021156017A	**CA017**	ANTERIORE
CADDY II Furgonato (9K9A)					
1.4		00-04	357412249	**CA016**	ANTERIORE
60 1.4		95-04	357412249	**CA016**	ANTERIORE
75 1.6		95-00	357412249	**CA016**	ANTERIORE
1.9 D		95-04	357412249	**CA016**	ANTERIORE
1.9 SDI		95-04	357412249	**CA016**	ANTERIORE
1.9 TDI		96-04	357412249	**CA016**	ANTERIORE

CUSCINETTI AMMORTIZZATORE
SHOCKABSORBER BEARING
ROULEMENTS AMORTISSEURS

follows VOLKSWAGEN

MODELLO	DIMENSIONI	ANNO	RIF ORIGINALE	RIF CORAM	NOTE
CADDY II Pick-up (9U7)					
1.6		96-00	357412249	**CA016**	ANTERIORE
1.9 D		96-00	357412249	**CA016**	ANTERIORE
CORRADO (53I)					
1.8 16V		89-92	021156017A	**CA017**	ANTERIORE
1.8 G60		88-93	021156017A	**CA017**	ANTERIORE
2.0 i		93-95	021156017A	**CA017**	ANTERIORE
2.0 i 16V		91-95	021156017A	**CA017**	ANTERIORE
2.9 VR6		91-95	357412249	**CA016**	ANTERIORE
FOX (5Z1)					
1.2		05->	357412249	**CA016**	ANTERIORE
1.4		05->	357412249	**CA016**	ANTERIORE
1.4 TDI		05->	357412249	**CA016**	ANTERIORE
GOLF I (17)					
1.1		81-83	021156017A	**CA017**	ANTERIORE
1.3		79-83	021156017A	**CA017**	ANTERIORE
1.5		74-83	021156017A	**CA017**	ANTERIORE
1.5 D		76-80	021156017A	**CA017**	ANTERIORE
1.6		75-84	021156017A	**CA017**	ANTERIORE
1.6 D		80-83	021156017A	**CA017**	ANTERIORE
1.6 GTI		76-82	021156017A	**CA017**	ANTERIORE
1.6 TD		82-83	021156017A	**CA017**	ANTERIORE
1.8 GTI		82-83	021156017A	**CA017**	ANTERIORE
GOLF I Cabriolet (155)					
1.5		79-83	021156017A	**CA017**	ANTERIORE
1.6		79-92	021156017A	**CA017**	ANTERIORE
1.8		82-93	021156017A	**CA017**	ANTERIORE
GOLF II (19E, 1G1)					
1.0		83-91	021156017A	**CA017**	ANTERIORE
1.3		83-87	021156017A	**CA017**	ANTERIORE
1.3 Cat.		86-92	021156017A	**CA017**	ANTERIORE
1.6		81-92	021156017A	**CA017**	ANTERIORE
1.6 D		83-91	021156017A	**CA017**	ANTERIORE
1.6 TD		83-91	021156017A	**CA017**	ANTERIORE
1.8		84-91	021156017A	**CA017**	ANTERIORE
1.8 Syncro		86-91	021156017A	**CA017**	ANTERIORE
1.8 GTI		83-91	021156017A	**CA017**	ANTERIORE
1.8 GTI 16V		86-91	021156017A	**CA017**	ANTERIORE
1.8 GTI Cat.		87-91	021156017A	**CA017**	ANTERIORE
1.8 GTI G60		90-91	021156017A	**CA017**	ANTERIORE
1.8 GTI G60 Syncro		88-91	021156017A	**CA017**	ANTERIORE
1.8 i Cat.		87-91	021156017A	**CA017**	ANTERIORE
1.8 i Syncro Cat.		87-91	021156017A	**CA017**	ANTERIORE

CUSCINETTI AMMORTIZZATORE
SHOCKABSORBER BEARING
ROULEMENTS AMORTISSEURS

follows VOLKSWAGEN

MODELLO	DIMENSIONI	ANNO	RIF ORIGINALE	RIF CORAM	NOTE
GOLF III (1H1)					
1.4		91-97	357412249	**CA016**	ANTERIORE
1.4		91-97	021156017A	**CA017**	ANTERIORE
1.6		92-97	357412249	**CA016**	ANTERIORE
1.6		92-97	021156017A	**CA017**	ANTERIORE
1.8		91-97	357412249	**CA016**	ANTERIORE
1.8		91-97	021156017A	**CA017**	ANTERIORE
1.8 Syncro (1HX1)		93-97	357412249	**CA016**	ANTERIORE
1.8 Syncro (1HX1)		93-97	021156017A	**CA017**	ANTERIORE
1.9 D - 1.9 TD,GTD		91-97	357412249	**CA016**	ANTERIORE
1.9 D - 1.9 TD,GTD		91-97	021156017A	**CA017**	ANTERIORE
1.9 SDI		97-97	357412249	**CA016**	ANTERIORE
1.9 TDI		93-97	357412249	**CA016**	ANTERIORE
1.9 TDI		93-97	021156017A	**CA017**	ANTERIORE
1.9 TDI Syncro (1HX1)		95-97	357412249	**CA016**	ANTERIORE
2.0		91-97	357412249	**CA016**	ANTERIORE
2.0		91-97	021156017A	**CA017**	ANTERIORE
2.0 GTI 16V		92-97	021156017A	**CA017**	ANTERIORE
2.0 Syncro (1HX1)		95-97	357412249	**CA016**	ANTERIORE
2.0 GTI 16V		92-97	357412249	**CA016**	ANTERIORE
2.8 VR6		92-97	357412249	**CA016**	ANTERIORE
2.8 VR6 Syncro (1HX1)		94-97	357412249	**CA016**	ANTERIORE
2.9 VR6 Syncro (1HX1)		94-97	357412249	**CA016**	ANTERIORE
Citystromer		94-97	357412249	**CA016**	ANTERIORE
GOLF III Cabriolet (1E7)					
1.6		94-98	357412249	**CA016**	ANTERIORE
1.8		93-98	357412249	**CA016**	ANTERIORE
1.9 TDI		95-98	357412249	**CA016**	ANTERIORE
2.0		93-98	357412249	**CA016**	ANTERIORE
GOLF III Variant (1H5)					
1.4		93-99	021156017A	**CA017**	ANTERIORE
1.4		93-99	357412249	**CA016**	ANTERIORE
1.6		93-97	021156017A	**CA017**	ANTERIORE
1.6		94-99	357412249	**CA016**	ANTERIORE
1.8		93-88	021156017A	**CA017**	ANTERIORE
1.8		93-99	357412249	**CA016**	ANTERIORE
1.8 Syncro		94-99	357412249	**CA016**	ANTERIORE
1.9 D - 1.9 TD - 1.9 TDI		93-99	021156017A	**CA017**	ANTERIORE
1.9 D - 1.9 TD - 1.9 TDI		93-99	357412249	**CA016**	ANTERIORE
1.9 SDI		97-99	357412249	**CA016**	ANTERIORE
1.9 TDI Syncro		95-99	357412249	**CA016**	ANTERIORE
2.0		93-99	021156017A	**CA017**	ANTERIORE
2.0		93-99	357412249	**CA016**	ANTERIORE
2.0 Syncro		95-99	357412249	**CA016**	ANTERIORE
2.9 VR6 - 2.9 VR6 Syncro		94-99	357412249	**CA016**	ANTERIORE

CUSCINETTI AMMORTIZZATORE
SHOCKABSORBER BEARING
ROULEMENTS AMORTISSEURS

follows VOLKSWAGEN

MODELLO	DIMENSIONI	ANNO	RIF ORIGINALE	RIF CORAM	NOTE
GOLF IV (1J1)					
1.4 16V		97->	357412249	**CA016**	ANTERIORE
1.6		97->	357412249	**CA016**	ANTERIORE
1.6 16V		00->	357412249	**CA016**	ANTERIORE
1.6 FSI		02->	357412249	**CA016**	ANTERIORE
1.8		97->	357412249	**CA016**	ANTERIORE
1.8 4motion		98->	357412249	**CA016**	ANTERIORE
1.8 T		97->	357412249	**CA016**	ANTERIORE
1.8 T GTI		01->	357412249	**CA016**	ANTERIORE
1.9 SDI		97->	357412249	**CA016**	ANTERIORE
1.9 TDI		97-04	357412249	**CA016**	ANTERIORE
1.9 TDI 4motion		98-01	357412249	**CA016**	ANTERIORE
2.0		98->	357412249	**CA016**	ANTERIORE
2.0 4motion		00->	357412249	**CA016**	ANTERIORE
2.3 V5		97-00	357412249	**CA016**	ANTERIORE
2.3 V5 4motion		98-00	357412249	**CA016**	ANTERIORE
2.8 V6 4motion		99->	357412249	**CA016**	ANTERIORE
3.2 R32 4motion		02->	357412249	**CA016**	ANTERIORE
GOLF IV Cabriolet (1E7)					
1.6		98->	357412249	**CA016**	ANTERIORE
1.8		98->	357412249	**CA016**	ANTERIORE
1.9 TDI		98->	357412249	**CA016**	ANTERIORE
2.0		98->	357412249	**CA016**	ANTERIORE
GOLF IV Variant (1J5)					
1.4 16V		99->	357412249	**CA016**	ANTERIORE
1.6		00->	357412249	**CA016**	ANTERIORE
1.6 16V		00->	357412249	**CA016**	ANTERIORE
1.6 FSI		02->	357412249	**CA016**	ANTERIORE
1.8 4motion		99->	357412249	**CA016**	ANTERIORE
1.8 T		00->	357412249	**CA016**	ANTERIORE
1.9 SDI		99->	357412249	**CA016**	ANTERIORE
1.9 TDI - 1.9 TDI 4motion		99-01	357412249	**CA016**	ANTERIORE
2.0		99->	357412249	**CA016**	ANTERIORE
2.0 4motion		00->	357412249	**CA016**	ANTERIORE
2.0 Bi-Fuel		02->	357412249	**CA016**	ANTERIORE
2.3 V5		99->	357412249	**CA016**	ANTERIORE
2.3 V5 4motion		99->	357412249	**CA016**	ANTERIORE
2.8 V6 4motion		99->	357412249	**CA016**	ANTERIORE
JETTA I (16)					
1.1		78-84	021156017A	**CA017**	ANTERIORE
1.3		79-84	021156017A	**CA017**	ANTERIORE
1.5		78-84	021156017A	**CA017**	ANTERIORE
1.5 D		78-80	021156017A	**CA017**	ANTERIORE
1.6		78-84	021156017A	**CA017**	ANTERIORE
1.6 D		80-84	021156017A	**CA017**	ANTERIORE
1.6 GLI		78-82	021156017A	**CA017**	ANTERIORE
1.6 TD		82-84	021156017A	**CA017**	ANTERIORE
1.8		82-84	021156017A	**CA017**	ANTERIORE

CUSCINETTI AMMORTIZZATORE
SHOCKABSORBER BEARING
ROULEMENTS AMORTISSEURS

follows VOLKSWAGEN

MODELLO	DIMENSIONI	ANNO	RIF ORIGINALE	RIF CORAM	NOTE
JETTA II (19E,1G2)					
1.3		84-87	021156017A	**CA017**	ANTERIORE
1.3 Cat.		87-91	021156017A	**CA017**	ANTERIORE
1.6		84-92	021156017A	**CA017**	ANTERIORE
1.6 D		84-91	021156017A	**CA017**	ANTERIORE
1.6 TD		84-91	021156017A	**CA017**	ANTERIORE
1.8		84-91	021156017A	**CA017**	ANTERIORE
1.8 Cat.		87-91	021156017A	**CA017**	ANTERIORE
1.8 Syncro		87-88	021156017A	**CA017**	ANTERIORE
1.8 16V		86-91	021156017A	**CA017**	ANTERIORE
KAEFER Cabriolet (15) 1302,1303					
1.6		70-79	021156017A	**CA017**	ANTERIORE
LUPO (6X1, 6E1)					
1.0		98->	357412249	**CA016**	ANTERIORE
1.2 TDI 3L		99->	357412249	**CA016**	ANTERIORE
1.4		00->	357412249	**CA016**	ANTERIORE
1.4 16V		98->	357412249	**CA016**	ANTERIORE
1.4 FSI		01->	357412249	**CA016**	ANTERIORE
1.4 TDI		99->	357412249	**CA016**	ANTERIORE
1.6 GTI		00->	357412249	**CA016**	ANTERIORE
1.7 SDI		98->	357412249	**CA016**	ANTERIORE
NEW BEETLE (9C1, 1C1)					
1.4		01->	357412249	**CA016**	ANTERIORE
1.6		99->	357412249	**CA016**	ANTERIORE
1.8 T		99->	357412249	**CA016**	ANTERIORE
1.9 TDI		98-01	357412249	**CA016**	ANTERIORE
2.0		98->	357412249	**CA016**	ANTERIORE
2.3 V5		00->	357412249	**CA016**	ANTERIORE
RSI 3.2 (1C9)		00->	357412249	**CA016**	ANTERIORE
NEW BEETLE Cabriolet (1Y7)					
1.4		03->	357412249	**CA016**	ANTERIORE
1.6		03->	357412249	**CA016**	ANTERIORE
1.8 T		04->	357412249	**CA016**	ANTERIORE
1.9 TDI		03->	357412249	**CA016**	ANTERIORE
2.0		03->	357412249	**CA016**	ANTERIORE
PASSAT (32)					
1.3		73-80	021156017A	**CA017**	ANTERIORE
1.5		73-75	021156017A	**CA017**	ANTERIORE
1.5 D		77-80	021156017A	**CA017**	ANTERIORE
1.6		75-80	021156017A	**CA017**	ANTERIORE

CUSCINETTI AMMORTIZZATORE
SHOCKABSORBER BEARING
ROULEMENTS AMORTISSEURS

follows VOLKSWAGEN

MODELLO	DIMENSIONI	ANNO	RIF ORIGINALE	RIF CORAM	NOTE
PASSAT (32B)					
1.3		80-86	021156017A	**CA017**	ANTERIORE
1.6		80-88	021156017A	**CA017**	ANTERIORE
1.6 D		80-88	021156017A	**CA017**	ANTERIORE
1.6 TD		82-88	021156017A	**CA017**	ANTERIORE
1.8		83-88	021156017A	**CA017**	ANTERIORE
1.9		81-83	021156017A	**CA017**	ANTERIORE
2.0		83-88	021156017A	**CA017**	ANTERIORE
2.2		85-88	021156017A	**CA017**	ANTERIORE
PASSAT (3A2,35I)					
1.6		88-91	021156017A	**CA017**	ANTERIORE
1.6		94-96	357412249	**CA016**	ANTERIORE
1.6 TD		88-93	021156017A	**CA017**	ANTERIORE
1.6 TD		88-93	357412249	**CA016**	ANTERIORE
1.8		88-96	021156017A	**CA017**	ANTERIORE
1.8		88-96	357412249	**CA016**	ANTERIORE
1.8 16V		88-89	021156017A	**CA017**	ANTERIORE
1.8 G60 Syncro		88-96	357412249	**CA016**	ANTERIORE
1.9 D		89-93	357412249	**CA016**	ANTERIORE
1.9 D		89-93	021156017A	**CA017**	ANTERIORE
1.9 TD		91-96	021156017A	**CA017**	ANTERIORE
1.9 TD		91-96	357412249	**CA016**	ANTERIORE
1.9 TDI		93-96	357412249	**CA016**	ANTERIORE
2.0 - 2.0 Syncro		90-96	357412249	**CA016**	ANTERIORE
2.0 - 2.0 Syncro		90-96	021156017A	**CA017**	ANTERIORE
2.0 16V		88-96	357412249	**CA016**	ANTERIORE
2.0 16V		88-93	021156017A	**CA017**	ANTERIORE
2.8 VR6		91-96	357412249	**CA016**	ANTERIORE
PASSAT Tre volumi (32B)					
1.6					
1.6		85-88	021156017A	**CA017**	ANTERIORE
1.6 TD		85-88	021156017A	**CA017**	ANTERIORE
1.8		85-88	021156017A	**CA017**	ANTERIORE
2.2		85-88	021156017A	**CA017**	ANTERIORE
PASSAT Variant (33)					
1.3		73-80	021156017A	**CA017**	ANTERIORE
1.5		73-75	021156017A	**CA017**	ANTERIORE
1.5 D		77-80	021156017A	**CA017**	ANTERIORE
1.6		75-80	021156017A	**CA017**	ANTERIORE
1.6 D		79-80	021156017A	**CA017**	ANTERIORE
1.6 i		78-80	021156017A	**CA017**	ANTERIORE

CUSCINETTI AMMORTIZZATORE
SHOCKABSORBER BEARING
ROULEMENTS AMORTISSEURS

follows VOLKSWAGEN

MODELLO	DIMENSIONI	ANNO	RIF ORIGINALE	RIF CORAM	NOTE
PASSAT Variant (32B)					
1.3		80-86	021156017A	**CA017**	ANTERIORE
1.6		80-86	021156017A	**CA017**	ANTERIORE
1.6 D		80-88	021156017A	**CA017**	ANTERIORE
1.6 TD		82-88	021156017A	**CA017**	ANTERIORE
1.8		83-88	021156017A	**CA017**	ANTERIORE
1.8 Syncro		86-88	021156017A	**CA017**	ANTERIORE
1.9		81-83	021156017A	**CA017**	ANTERIORE
2.0 - 2.0 Syncro		83-88	021156017A	**CA017**	ANTERIORE
2.2 - 2.2 Syncro		85-88	021156017A	**CA017**	ANTERIORE
PASSAT Variant (3A5,35I)					
1.6		88-95	357412249	**CA016**	ANTERIORE
1.6		88-91	021156017A	**CA017**	ANTERIORE
1.6 TD		88-93	357412249	**CA016**	ANTERIORE
1.6 TD		88-93	021156017A	**CA017**	ANTERIORE
1.8		88-97	357412249	**CA016**	ANTERIORE
1.8		88-97	021156017A	**CA017**	ANTERIORE
1.8 16V		88-89	021156017A	**CA017**	ANTERIORE
1.8 G60 Syncro		88-97	357412249	**CA016**	ANTERIORE
1.8 G60 Syncro		88-97	021156017A	**CA017**	ANTERIORE
1.9 D		89-93	357412249	**CA016**	ANTERIORE
1.9 D		89-93	021156017A	**CA017**	ANTERIORE
1.9 TD		91-97	357412249	**CA016**	ANTERIORE
1.9 TD		91-97	021156017A	**CA017**	ANTERIORE
1.9 TDI		93-97	357412249	**CA016**	ANTERIORE
2.0 - 2.0 Syncro		90-97	357412249	**CA016**	ANTERIORE
2.0 - 2.0 Syncro		90-97	021156017A	**CA017**	ANTERIORE
2.0 16V		94-97	357412249	**CA016**	ANTERIORE
2.0 16V		88-93	021156017A	**CA017**	ANTERIORE
2.8 VR6		91-97	357412249	**CA016**	ANTERIORE
2.9 VR6 Syncro		94-97	357412249	**CA016**	ANTERIORE
POLO (6N1)					
45 - 50 1.0		94-99	357412249	**CA016**	ANTERIORE
55 1.3		94-95	357412249	**CA016**	ANTERIORE
55 - 60 1.4		95-99	357412249	**CA016**	ANTERIORE
100 1.4 16V		96-99	357412249	**CA016**	ANTERIORE
75 1.6		94-99	357412249	**CA016**	ANTERIORE
120 1.6 16V GTI		98-99	357412249	**CA016**	ANTERIORE
60 1.7 SDI		97-99	357412249	**CA016**	ANTERIORE
64 1.9 D		94-99	357412249	**CA016**	ANTERIORE
64 1.9 SDI		96-99	357412249	**CA016**	ANTERIORE

CUSCINETTI AMMORTIZZATORE
SHOCKABSORBER BEARING
ROULEMENTS AMORTISSEURS

follows VOLKSWAGEN

MODELLO	DIMENSIONI	ANNO	RIF ORIGINALE	RIF CORAM	NOTE
POLO CLASSIC (6KV2)					
60 1.4		95-01	357412249	**CA016**	ANTERIORE
75 1.6		95-01	357412249	**CA016**	ANTERIORE
100 1.6		95-01	357412249	**CA016**	ANTERIORE
57 1.7 SDI		97-01	357412249	**CA016**	ANTERIORE
90 1.8		97-01	357412249	**CA016**	ANTERIORE
90 1.9 TDI		96-01	357412249	**CA016**	ANTERIORE
110 1.9 TDI		98-01	357412249	**CA016**	ANTERIORE
64 1.9 SDI		95-99	357412249	**CA016**	ANTERIORE
POLO Furgonato (6NF)					
1.0		94->	357412249	**CA016**	ANTERIORE
1.7 SDI		97->	357412249	**CA016**	ANTERIORE
1.9 D		94->	357412249	**CA016**	ANTERIORE
POLO Variant (6KV5)					
1.4		97-01	357412249	**CA016**	ANTERIORE
1.6		97-01	357412249	**CA016**	ANTERIORE
1.7 SDI		97-01	357412249	**CA016**	ANTERIORE
1.8		97-01	357412249	**CA016**	ANTERIORE
1.9 SDI		97-01	357412249	**CA016**	ANTERIORE
1.9 TDI		97-01	357412249	**CA016**	ANTERIORE
SANTANA (32B)					
1.3		81-83	021156017A	**CA017**	ANTERIORE
1.6 - 1.6 D - 1.6 TD		81-84	021156017A	**CA017**	ANTERIORE
1.8		83-84	021156017A	**CA017**	ANTERIORE
1.9		81-83	021156017A	**CA017**	ANTERIORE
2.0		83-84	021156017A	**CA017**	ANTERIORE
SCIROCCO (53)					
1.1		74-79	021156017A	**CA017**	ANTERIORE
1.3		79-80	021156017A	**CA017**	ANTERIORE
1.5		74-80	021156017A	**CA017**	ANTERIORE
1.6		75-80	021156017A	**CA017**	ANTERIORE
SCIROCCO (53B)					
1.3 - 1.5		80-83	021156017A	**CA017**	ANTERIORE
1.6		80-90	021156017A	**CA017**	ANTERIORE
1.8		82-92	021156017A	**CA017**	ANTERIORE
1.8 16V		85-92	021156017A	**CA017**	

CUSCINETTI AMMORTIZZATORE
SHOCKABSORBER BEARING
ROULEMENTS AMORTISSEURS

follows VOLKSWAGEN

MODELLO	DIMENSIONI	ANNO	RIF ORIGINALE	RIF CORAM	NOTE
SHARAN (7M8, 7M9, 7M6)					
1.8 T 20V		97->	357412249	**CA016**	ANTERIORE
1.9 TDI		95-00	357412249	**CA016**	ANTERIORE
1.9 TDI		02->	357412249	**CA016**	ANTERIORE
1.9 TDI 4motion		00->	357412249	**CA016**	ANTERIORE
2.0		95->	357412249	**CA016**	ANTERIORE
2.8 V6 24V		00->	357412249	**CA016**	ANTERIORE
2.8 V6 24V 4motion		00->	357412249	**CA016**	ANTERIORE
2.8 VR6		95-00	357412249	**CA016**	ANTERIORE
2.8 VR6 Syncro		96-00	357412249	**CA016**	ANTERIORE
TRANSPORTER III pianale piatto					
2.0		79-86		**CA011**	ANTERIORE
VENTO (1H2)					
1.4		91-98	357412249	**CA016**	ANTERIORE
1.4		91-98	021156017A	**CA017**	ANTERIORE
1.6		92-98	357412249	**CA016**	ANTERIORE
1.6		92-98	021156017A	**CA017**	ANTERIORE
1.8 - 1.9 D - 1.9 TD - 2.0		91-98	357412249	**CA016**	ANTERIORE
1.8 - 1.9 D - 1.9 TD - 2.0		91-98	021156017A	**CA017**	ANTERIORE
1.9 TDI		93-98	357412249	**CA016**	ANTERIORE
1.9 TDI		93-98	021156017A	**CA017**	ANTERIORE
1.9 SDI		97-99	357412249	**CA016**	ANTERIORE
2.8 VR6		92-98	357412249	**CA016**	ANTERIORE

CUSCINETTI AMMORTIZZATORE
SHOCKABSORBER BEARING
ROULEMENTS AMORTISSEURS

VOLVO

MODELLO	DIMENSIONI	ANNO	RIF ORIGINALE	RIF CORAM	NOTE
440 K					
1.6		88-96	3411070-0	**CA009**	ANTERIORE
1.7		88-96	3411070-0	**CA009**	ANTERIORE
1.7 Turbo		88-96	3411070-0	**CA009**	ANTERIORE
1.8		91-96	3411070-0	**CA009**	ANTERIORE
1.9 Turbo-Diesel		94-96	3411070-0	**CA009**	ANTERIORE
2.0		92-96	3411070-0	**CA009**	ANTERIORE
460 L					
1.6		92-96	3411070-0	**CA009**	ANTERIORE
1.7		89-96	3411070-0	**CA009**	ANTERIORE
1.7 Turbo		89-96	3411070-0	**CA009**	ANTERIORE
1.8		91-96	3411070-0	**CA009**	ANTERIORE
1.9 Turbo-Diesel		94-96	3411070-0	**CA009**	ANTERIORE
2.0		92-96	3411070-0	**CA009**	ANTERIORE
460 E					
1.7		86-96	3411070-0	**CA009**	ANTERIORE
1.7 Turbo		87-96	3411070-0	**CA009**	ANTERIORE
2.0		92-95	3711070-0	**CA009**	ANTERIORE

CUSCINETTI AMMORTIZZATORE
SHOCKABSORBER BEARING
ROULEMENTS AMORTISSEURS
LISTA DI COMPARAZIONE - CROSS REFERENCES - LISTE CORRISPONDANCE

CORAM	APPLICAZIONE	RIF. ORIGINALE	SKF	LORETT	SNR	Q.H	SACHS	BOGE	RUVILLE
CA006	ALFA ROMEO	60806398	VKDA35200 T	C086	M258.03	QAM101	801007		
CA006	ALFA ROMEO	7601502	VKDA35200 T	C086	M258.03	QAM101	801007		
CA006	ALFA ROMEO	7602150	VKDA35200 T	C086	M258.03	QAM101	801007		
CA006	FIAT	7601502	VKDA35200 T	C086	M258.03	QAM101	801007		
CA006	FIAT	7714789	VKDA35200 T	C086	M258.03	QAM101	801007		
CA006	LANCIA	7601502	VKDA35200 T	C086	M258.03	QAM101	801007		
CA008	CITROËN	75472408	VKD24000	C508					
CA008	CITROËN	26204359	VKD24000	C508					
CA008	CITROËN	7903090223	VKD24000	C508					
CA008	FIAT	7725155	VKD24000	C508					
CA009	CITROËN	9151063380	VKD35001	C504	M255.01	QAM111		87-3831	
CA009	CITROËN	91537289	VKD35001	C504	M255.01	QAM111		87-3831	
CA009	CITROËN	5035.27	VKD35001	C504	M255.01	QAM111		87-3831	
CA009	CITROËN	5035.19	VKD35001	C504	M255.01	QAM111		87-3831	
CA009	PEUGEOT	5035.20	VKD35001	C504	M255.01	QAM111		87-3831	
CA009	PEUGEOT	5035.18	VKD35001	C504	M255.01	QAM111		87-3831	
CA009	PEUGEOT	5035.23	VKD35001	C504	M255.01	QAM111		87-3831	
CA009	PEUGEOT	5035.27	VKD35001	C504	M255.01	QAM111		87-3831	
CA009	RENAULT	7700803635	VKD35001	C504	M255.01	QAM111		87-3831	
CA009	RENAULT	7700777654	VKD35001	C504	M255.01	QAM111		87-3831	
CA009	RENAULT	7700797666	VKD35001	C504	M255.01	QAM111		87-3831	
CA009	VOLVO	3411070-0	VKD35001	C504	M255.01	QAM111		87-3831	
CA011	RENAULT	7700800107		C506	AP40016	QAM112	801001		
CA011	RENAULT	6001025850		C506	AP40016	QAM112	801001		
CA012	CITROËN	5035.30	VKD35017	C479	M259.05				
CA012	CITROËN	5035.30	VKD35313	C479	M259.05				
CA012	CITROËN	5035.39	VKD35017	C479	M259.05				
CA012	CITROËN	5035.39	VKD35313	C479	M259.05				
CA012	CITROËN	5035.47	VKD35017	C479	M259.05				
CA012	CITROËN	5035.47	VKD35313	C479	M259.05				
CA012	FIAT	1318573080	VKD35017	C479	M259.05				
CA012	FIAT	1318573080	VKD35313	C479	M259.05				
CA012	FIAT	1302443080	VKD35017	C479	M259.05				
CA012	FIAT	1302443080	VKD35313	C479	M259.05				
CA012	PEUGEOT	5035.30	VKD35017	C479	M259.05				
CA012	PEUGEOT	5035.30	VKD35313	C479	M259.05				
CA012	PEUGEOT	5035.39	VKD35017	C479	M259.05				
CA012	PEUGEOT	5035.39	VKD35313	C479	M259.05				
CA012	PEUGEOT	5035.47	VKD35017	C479	M259.05				
CA012	PEUGEOT	5035.47	VKD35313	C479	M259.05				
CA013	ALFA ROMEO	60501446		C088					
CA014	CITROËN	5035.38	VKD35018T	C099	M259.08	QAM115	801011		
CA014	CITROËN	5035.29	VKD35018T	C099	M259.08	QAM115	801011		
CA014	CITROËN	5035.43	VKD35018T	C099	M259.08	QAM115	801011		
CA014	FIAT	1303672080	VKD35018T	C099	M259.08	QAM115	801011		
CA014	FIAT	1318825080	VKD35018T	C099	M259.08	QAM115	801011		
CA014	PEUGEOT	5035.29	VKD35018T	C099	M259.08	QAM115	801011		
CA014	PEUGEOT	5035.38	VKD35018T	C099	M259.08	QAM115	801011		
CA014	PEUGEOT	5035.43	VKD35018T	C099	M259.08	QAM115	801011		
CA014	LANCIA	5035.29	VKD35018T	C099	M259.08	QAM115	801011		
CA015	FIAT/LANCIA/SEAT	440895	VKDA37200T	C093	M258.01	QAM103	801020	87-388-2	
CA015	FIAT/LANCIA/SEAT	440895	VKDA37201T	C093	M258.01	QAM103	801020	87-388-2	
CA015	FIAT/LANCIA/SEAT	440895	VKDA37202T	C093	M258.01	QAM103	801020	87-388-2	
CA015	FIAT/LANCIA/SEAT	440895	VKDA37203T	C093	M258.01	QAM103	801020	87-388-2	
CA015	FIAT/LANCIA/SEAT	440895	VKDA37204T	C093	M258.01	QAM103	801020	87-388-2	
CA016	FORD	7201688		C626	M254.01		801016	87-398-L	

CUSCINETTI AMMORTIZZATORE
SHOCKABSORBER BEARING
ROULEMENTS AMORTISSEURS
LISTA DI COMPARAZIONE - CROSS REFERENCES - LISTE CORRISPONDANCE

CORAM	APPLICAZIONE	RIF. ORIGINALE	SKF	LORETT	SNR	Q.H	SACHS	BOGE	RUVILLE
CA016	FORD	95VW3K031AA		C626	M254.01		801016	87-398-L	
CA016	AUDI/SEAT/SKODA/VW	1J0412249		C626	M254.01		801016	87-398-L	
CA016	AUDI/SEAT/SKODA/VW	357412249		C626	M254.01		801016	87-398-L	
CA016	AUDI/SEAT/SKODA/VW	357412249 A		C626	M254.01		801016	87-398-L	
CA017	SEAT/VW/AUDI	021156017A		C621					865400
CA017	SEAT/VW/AUDI	191412249		C621					865400
CA017	SEAT/VW/AUDI	377412335A		C621					865400
CA017	SEAT/VW/AUDI	823412249		C621					865400
CA017	VOLVO/VW	3266405		C621					865400
CA017	VOLVO	3266405-4		C621					865400
CA017	SEAT	SE021156011A		C621					865400

CUSCINETTI AMMORTIZZATORE
SHOCKABSORBER BEARING
ROULEMENTS AMORTISSEURS
LISTA DI COMPARAZIONE - CROSS REFERENCES - LISTE CORRISPONDANCE

ALFA ROMEO	CORAM
60501446	CA013
60806398	CA006
7601502	CA006
7602150	CA006

AUDI	CORAM
021156017A	CA017
191412249	CA017
1J0412249	CA016
357412249	CA016
357412249 A	CA016
377412335A	CA017
823412249	CA017

CITROËN	CORAM
26204359	CA008
5035.19	CA009
5035.27	CA009
5035.29	CA014
5035.30	CA012
5035.38	CA014
5035.39	CA012
5035.43	CA014
5035.47	CA012
75472408	CA008
7903090223	CA008
9151063380	CA009
91537289	CA009

FIAT	CORAM
1302443080	CA012
1302443080	CA012
1303672080	CA014
1318573080	CA012
1318825080	CA014
440895	CA015
440895	CA015
7601502	CA006
7714789	CA006
7725155	CA008

FORD	CORAM
7201688	CA016
95VW3K031AA	CA016

LANCIA	CORAM
440895	CA015
5035.29	CA014
7601502	CA006

PEUGEOT	CORAM
5035.18	CA009
5035.20	CA009
5035.23	CA009
5035.27	CA009
5035.29	CA014
5035.30	CA012
5035.38	CA014
5035.39	CA012
5035.43	CA014
5035.47	CA012

RENAULT	CORAM
6001025850	CA011
7700777654	CA009
7700797666	CA009
7700800107	CA011
7700803635	CA009

SEAT	CORAM
021156017A	CA017
191412249	CA017
1J0412249	CA016
357412249	CA016
357412249 A	CA016
377412335A	CA017
440895	CA015
823412249	CA017
SE021156011A	CA017

SKODA	CORAM
1J0412249	CA016
357412249	CA016
357412249 A	CA016

VOLVO	CORAM
3266405	CA017
3266405-4	CA017
3411070-0	CA009

VW	CORAM
021156017A	CA017
191412249	CA017
1J0412249	CA016
3266405	CA017
357412249	CA016
357412249 A	CA016
377412335A	CA017
823412249	CA017

LORETT	CORAM
C086	CA006
C088	CA013
C093	CA015
C099	CA014
C479	CA012
C504	CA009
C506	CA011
C508	CA008
C621	CA017
C626	CA016

Q.H	CORAM
QAM101	CA006
QAM103	CA015
QAM111	CA009
QAM112	CA011
QAM115	CA014

RUVILLE	CORAM
865400	CA017

SACHS	CORAM
801001	CA011
801007	CA006
801011	CA014
801016	CA016
801020	CA015

SKF	CORAM
VKD24000	CA008
VKD35001	CA009
VKD35017	CA012
VKD35018T	CA014
VKD35313	CA012
VKDA35200 T	CA006
VKDA37200T	CA015

SNR	CORAM
AP40016	CA011
M254.01	CA016
M255.01	CA009
M258.01	CA015
M258.03	CA006
M259.05	CA012
M259.08	CA014

CA006

ALFA ROMEO	60806398	LANCIA	7601502
ALFA ROMEO	7601502		
ALFA ROMEO	7602150		
FIAT	7601502		
FIAT	7714789		

CA008

CITROEN	75472408		
CITROEN	26204359		
CITROEN	7903090223		
FIAT	7725155		

CA009

CITROEN	9151063380	PEUGEOT	5035.23
CITROEN	91537289	RENAULT	7700803635
CITROEN	5035.27	RENAULT	7700777654
PEUGEOT	5035.20	RENAULT	7700797666
PEUGEOT	5035.18	VOLVO	3411070-0

CA011

RENAULT	7700800107		
RENAULT	6001025850		

CA012

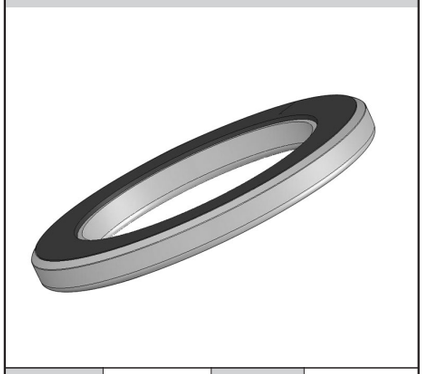

CITROEN	5035.30	FIAT	1302443080
CITROEN	5035.30	FIAT	1302443080
CITROEN	5035.39	PEUGEOT	5035.30
FIAT	1318573080	PEUGEOT	5035.30
FIAT	1318573080	PEUGEOT	5035.39

CA013

ALFA ROMEO	60501446		

CA014

CITROEN	5035.38	PEUGEOT	5035.29
CITROEN	5035.29	PEUGEOT	5035.38
CITROEN	5035.43	PEUGEOT	5035.43
FIAT	1303672080	LANCIA	5035.29
FIAT	1318825080		

CA015

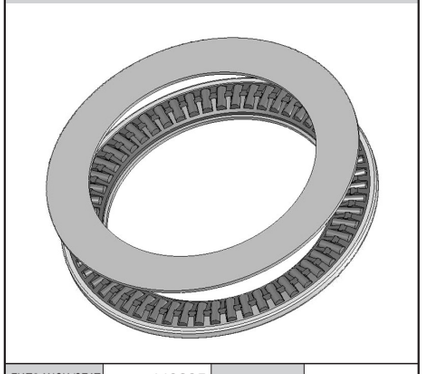

FIAT/LANCIA/SEAT	440895		
FIAT/LANCIA/SEAT	440895		
FIAT/LANCIA/SEAT	440895		
FIAT/LANCIA/SEAT	440895		
FIAT/LANCIA/SEAT	440895		

CA016

FORD	7201688		
FORD	95VW3K031AA		
AUDI/SEAT/SKODA/VW	1J0412249		
AUDI/SEAT/SKODA/VW	357412249		
AUDI/SEAT/SKODA/VW	357412249A		

CA017

SEAT/VW/AUDI	02115617A	VOLVO	3266405-4
SEAT/VW/AUDI	191412249	SEAT	SE021156011A
SEAT/VW/AUDI	377412335A		
SEAT/VW/AUDI	823412249		
VOLVO/VW	3266405		

CROCIERE CARDANICHE A RULLI
UNIVERSAL JOINTS CROSSES
JOINTS DE CARDAN

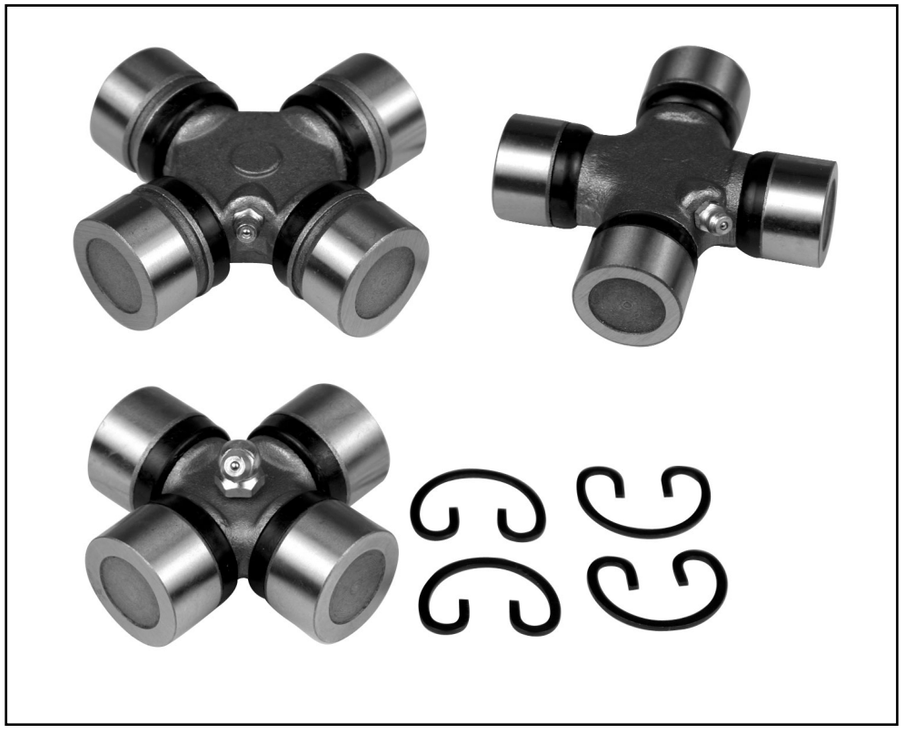

CROCIERE CARDANICHE A RULLI
UNIVERSAL JOINTS CROSSES
JOINTS DE CARDAN

MODELLO	DIMENSIONI	ANNO	RIF ORIGINALE	RIF CORAM	NOTE
CITROËN					
2CV - GS					
	23,84x61,30		4606993	**CC003**	
FIAT					
Argenta					
Tutti i tipi	23,84x61,30		5959654	**CC003**	
124					
Tutti i tipi	23,84x61,30		4593225	**CC003**	
124 Special					
Tutti i tipi	23,84x61,30		4593225	**CC003**	
125					
Tutti i tipi	23,84x61,30		105E8039A	**CC003**	
125 Special					
Tutti i tipi	23,84x61,30		105E8039A	**CC003**	
126					
Tutti i tipi	16,05x38,90		4193733	**CC010**	
127					
Tutti i tipi	16,05x38,90		4193733	**CC010**	
128					
Tutti i tipi	16,05x38,90		4193733	**CC010**	

CROCIERE CARDANICHE A RULLI
UNIVERSAL JOINTS CROSSES
JOINTS DE CARDAN

follows FIAT

MODELLO	DIMENSIONI	ANNO	RIF ORIGINALE	RIF CORAM	NOTE
128 Rally					
Tutti i tipi	16,05x38,90		4193733	**CC010**	
128 Special					
Tutti i tipi	16,05x38,90		4193733	**CC010**	
131					
Tutti i tipi	23,84x61,30		4606993	**CC003**	
132					
Tutti i tipi	23,84x61,30		4593225	**CC003**	
241					
Furgone	23,84x61,30		4606993	**CC003**	
1100					
R-T-TN-T3	23,84x61,30		4593225	**CC003**	
1300					
Tutti i tipi	23,84x61,30		4593225	**CC003**	
1500					
Tutti i tipi	23,84x61,30		4593225	**CC003**	
Daily					
	27,01x81,75		100000237	**CC008**	
Panda					
4x4	23,84x61,30		4593225	**CC003**	

CROCIERE CARDANICHE A RULLI
UNIVERSAL JOINTS CROSSES
JOINTS DE CARDAN

MODELLO	DIMENSIONI	ANNO	RIF ORIGINALE	RIF CORAM	NOTE
FORD					
Capri					
Tutti i tipi	23,84x61,30		8542225	**CC003**	
Cortina					
Tutti i tipi	23,84x61,30		8542225	**CC003**	
Corsair					
Tutti i tipi	23,84x61,30		8542225	**CC003**	
Taunus					
Tutti i tipi	23,84x61,30		34254	**CC003**	
Transit					
	27,01x81,75		100000237	**CC008**	
Triumph					
Tutti i tipi	23,84x61,30		34254	**CC003**	
Zodiac					
Tutti i tipi	23,84x61,30		34254	**CC003**	
INNOCENTI					
Mini					
Cooper	23,84x61,30		2101-2202	**CC003**	
ISUZU					
Faster					
KB20-KB20D	23,84x61,30		5-37300-019-0	**CC003**	
opel monterey A					
3.1 TD (UBS69)	76,5x29		8-97080-897-1	**CC032**	
3.2 (UBS69)	76,5x29		8-97080-897-1	**CC032**	

CROCIERE CARDANICHE A RULLI
UNIVERSAL JOINTS CROSSES
JOINTS DE CARDAN

MODELLO	DIMENSIONI	ANNO	RIF ORIGINALE	RIF CORAM	NOTE
LADA					
Ziguli					
Ziguli	23,84x61,30		656762	**CC003**	
Vaz					
2121	28x72,5		2121-2202025	**CC021**	
Niva					
	28x72,5		2121-2202025	**CC021**	
RENAULT					
Extrasette R 2130					
lato cambio	23,84x61,30		659773	**CC003**	
1000					
Special	23,84x61,30		659773	**CC003**	
1100					
Tutti i tipi	23,84x61,30		659773	**CC003**	
1300					
Tutti i tipi	23,84x61,30		659773	**CC003**	
1301					
Tutti i tipi	23,84x61,30		659773	**CC003**	
1500					
Tutti i tipi	23,84x61,30		659773	**CC003**	
1501					
	23,84x61,30		659773	**CC003**	
R4-R4L					
Tutti i tipi	23,84x61,30		8543672	**CC003**	
ZAZ					
ZAZ	23,84x61,30		659773	**CC003**	

CROCIERE CARDANICHE A RULLI
UNIVERSAL JOINTS CROSSES
JOINTS DE CARDAN

MODELLO	DIMENSIONI	ANNO	RIF ORIGINALE	RIF CORAM	NOTE
ROVER-LAND ROVER					
Land Rover					
Tutti i tipi	23,84x61,30		600628	**CC003**	
VOLVO					
144					
Tutti i tipi	23,84x61,30		659773	**CC003**	
260					
Tutti i tipi	23,84x61,30		1217606-1	**CC003**	
444					
Tutti i tipi	23,84x61,30		659773	**CC003**	
445					
Tutti i tipi	23,84x61,30		659773	**CC003**	
P 120					
Tutti i tipi	23,84x61,30		659773	**CC003**	
P 130					
Tutti i tipi	23,84x61,30		659773	**CC003**	
P 220					
Tutti i tipi	23,84x61,30		659773	**CC003**	
P 1800					
Tutti i tipi	23,84x61,30		659773	**CC003**	
WOLGA					
Gaz					
Gaz 402	30x88,5		3102-2201025	**CC020**	

CROCIERE CARDANICHE A RULLI
UNIVERSAL JOINTS CROSSES
JOINTS DE CARDAN
LISTA DI COMPARAZIONE - CROSS REFERENCES - LISTE CORRISPONDANCE

CORAM	APPLICAZIONE	RIF. ORIGINALE	MISURE	NOTE
CC003	FIAT	4593224	23,84x61,30	
CC003	FIAT	4593225	23,84x61,30	
CC003	FIAT	4606993	23,84x61,30	
CC003	FIAT	5959654	23,84x61,30	
CC003	FORD	3008E-4635A	23,84x61,30	
CC003	FORD	105E-7039A	23,84x61,30	
CC003	FORD	8542225	23,84x61,30	
CC003	FORD	34254	23,84x61,30	
CC003	FORD	3012E-4635A	23,84x61,30	
CC003	INNOCENTI	2101-2202	23,84x61,30	
CC003	INNOCENTI	39602101	23,84x61,30	
CC003	ISUZU	5-37300-019-0	23,84x61,30	
CC003	RENAULT	659773	23,84x61,30	
CC003	RENAULT	8543672	23,84x61,30	
CC003	LADA	656762	23,84x61,30	
CC003	LAND ROVER	600628	23,84x61,30	
CC003	VOLVO	1217606-1	23,84x61,30	
CC008	FIAT	100000237	27,01x81,75	
CC010	FIAT	4193733	16,05x38,90	
CC010	FIAT	4193734	16,05x38,90	
CC010	FIAT	4196735	16,05x38,90	
CC020	LADA	2121-2202025	88,5x30	
CC021	WOLGA	3102-2201025	72,5x28	
CC032	ISUZU	8-97080-897-1	76,5x29	

DIMENSIONI	CORAM
16,05x38,90	**CC010**
23,84x61,30	**CC003**
23,84x61,30	**CC003**
27,01x81,75	**CC008**
72,5x28	**CC021**
76,5x29	**CC032**
88,5x30	**CC020**

FIAT	CORAM
4193733	**CC010**
4193734	**CC010**
4196735	**CC010**
4593224	**CC003**
4593225	**CC003**
4606993	**CC003**
5959654	**CC003**
100000237	**CC008**
FORD	**CORAM**
105E-7039A	**CC003**
34254	**CC003**
8542225	**CC003**
3008E-4635A	**CC003**
3012E-4635A	**CC003**
INNOCENTI	**CORAM**
2101-2202	**CC003**
39602101	**CC003**
ISUZU	**CORAM**
5-37300-019-0	**CC003**

8-97080-897-1	**CC032**
LADA	**CORAM**
656762	**CC003**
2121-2202025	**CC020**
LAND ROVER	**CORAM**
600628	**CC003**
RENAULT	**CORAM**
659773	**CC003**
8543672	**CC003**
VOLVO	**CORAM**
1217606-1	**CC003**
WOLGA	**CORAM**
3102-2201025	**CC021**

CC003

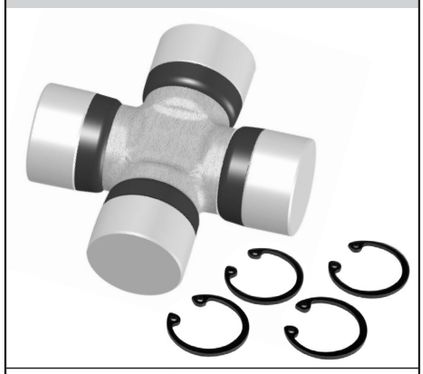

MIS. 23,84x61,30

FIAT	4593224	RENAULT	8543672
FORD	3008E-4635A	LADA	656762
INNOCENTI	2101-2202	LAND ROVER	600628
ISUZU	5-37300-019-0	VOLVO	1217606-1

CC003/I

MIS. 23,84x61,30

FIAT	4593224	RENAULT	8543672
FORD	3008E-4635A	LADA	656762
INNOCENTI	2101-2202	LAND ROVER	600628
ISUZU	5-37300-019-0	VOLVO	1217606-1

CC008

MIS. 27,01x81,75

FIAT	100000237		

CC010

MIS. 16,05x38,90

FIAT	4193733		
FIAT	4193734		
FIAT	4196735		

CC020

MIS. 88,5x30

LADA	2121-2202025		

CC021

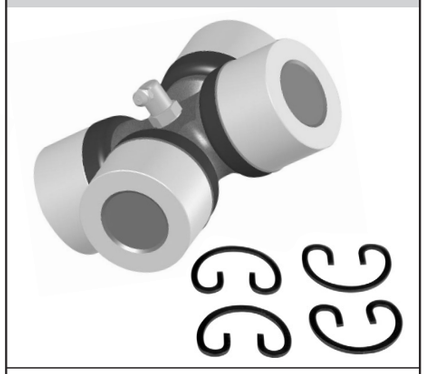

MIS. 72,5x28

WOLGA	3102-2201025		

CC032

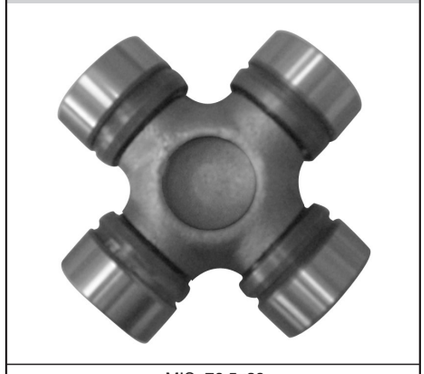

MIS. 76,5x29

ISUZU	8-97080-897-1		

7

CROCIERE TRIPODE SEMIASSE
CROSS JOINTS
CROISILLONS

CROCIERE TRIPODE SEMIASSE
CROSS JOINTS
CROISILLONS

ALFA ROMEO

MODELLO	DIMENSIONI	ANNO	RIF ORIGINALE	RIF CORAM	NOTE
145					
1.4 T.S. 16v Gamma 97 Vet. 3161888	32x22	97-98	46448513	**CC019**	22 denti
1.4 T.S. 16v M.Y. 99	32x22	98-00	46448513	**CC019**	22 denti
146					
1.4 T.S. 16v Gamma 97 Vet. 146134	32x22	97-98	46448513	**CC019**	22 denti
1.4 T.S. 16v M.Y. 99	32x22	98-00	46448513	**CC019**	22 denti

AUTOBIANCHI

A112					
Elegant - II Serie	25x20		4247799	**CC001**	20 denti
R82	29X20		5946475	**CC004**	20 denti
Y10					
	29x20	->10/85	5946475	**CC004**	20 denti
	29x19	11/85->	7540062	**CC006**	19 denti

CHEVY

	29,93x28	96-98	(ETMA) TR 1188	**CC014**	28 denti

CHEVROLET

BUICK CENTURY					
	36,99x32		(ETMA) TR 1160	**CC017**	32 denti

8

CROCIERE TRIPODE SEMIASSE
CROSS JOINTS
CROISILLONS

MODELLO	DIMENSIONI	ANNO	RIF ORIGINALE	RIF CORAM	NOTE
CHRYSLER					
CARAVAN					
	29,95x30	83-95	(ETMA) TR 1101	**CC023**	30 denti
NEON					
	29,93x28		(ETMA) TR 1188	**CC014**	28 denti
DAEWOO					
MATIZ					
	27,77x19		44103-781300	**CC024**	19 denti
TICO					
	27,77x19		44103-781300	**CC024**	19 denti
DODGE					
DAKOTA					
	29,95x30	83-95	(ETMA) TR 1101	**CC023**	30 denti
NEON					
	29,93x28		(ETMA) TR 1188	**CC014**	28 denti

CROCIERE TRIPODE SEMIASSE
CROSS JOINTS
CROISILLONS

FIAT

MODELLO	DIMENSIONI	ANNO	RIF ORIGINALE	RIF CORAM	NOTE
127					
Tutti i tipi	25x20		4314781	**CC001**	20 denti
U.T.	29x20		5946475	**CC004**	20 denti
1050 cc	29x19		7540062	**CC006**	19 denti
Panorama R82 BZ/DS t. 906775	28x20		7508720	**CC007**	20 denti
128					
Tutti i tipi	28x20		4247393	**CC002**	20 denti
BRAVA/BRAVO					
1.2 16v G98	32x20	98-00	7702195	**CC018**	20 denti
1370 SPI 12v 75cv/80cv	32x20	95-98	7702195	**CC018**	20 denti
1580 MPI 16v	32x20	95->	7702195	**CC018**	20 denti
1930 DS	32x20	95-98	7702195	**CC018**	20 denti
1.6 16v G.98	32x22	98-00	46448513	**CC019**	22 denti
1370 SPI 12v 80cv Vet. 4064492	32x22	95-98	46448513	**CC019**	22 denti
1580 MPI 16v 90cv/103cv Vet. 4064492	32x22	95-98	46448513	**CC019**	22 denti
CINQUECENTO					
899/903 CARB./SPI	29x19	92-98	7540062	**CC006**	19 denti
1108 SPI	29x19	92-98	7540062	**CC006**	19 denti
DOBLO'					
1.2 (223AXA1A)	31,93x21	01->	46304552	**CC025**	21 denti
1.2 8V MY.2004	31,93x21	04->	46304552	**CC025**	21 denti
1242 MPI 8V	31,93x21	00->	46304552	**CC025**	21 denti
1.3 JTD 16v MY.2004	35,5x24	04->	46307676	**CC026**	24 denti
1596 16V	31,93x21	00->	46307552	**CC025**	21 denti
1.6 16V (223AXD1A)	31,93x21	01->	46307552	**CC025**	21 denti
1.6 16V MY.2004	31,93x21	04->	46307552	**CC025**	21 denti
1.6 16V Bipower MY.2004	31,93x21	04->	46307552	**CC025**	21 denti
1.9 D (223AXB1A)	31,93x21	01->	46307552	**CC025**	21 denti
1.9 JTD	35,5x24	03->	46307676	**CC026**	24 denti
1.9 JTD (223AXE1A)	35,5x24	01->	46307676	**CC026**	24 denti
1.9 JTD MY.2004	35,5x24	04->	46307676	**CC026**	24 denti
1910 JTD	35,5x24	00->	46307676	**CC026**	24 denti
1.9 DS	31,93x21	00->	46307552	**CC025**	21 denti
1.9 DS ASP MY.2004	31,93x21	04->	46307552	**CC025**	21 denti
DOBLO' Cargo					
1.9 JTD	35,5x24	03->	46307676	**CC026**	24 denti
1.9 JTD (223ZXE1A)	35,5x24	01->	46307676	**CC026**	24 denti

CROCIERE TRIPODE SEMIASSE
CROSS JOINTS
CROISILLONS

follows FIAT

MODELLO	DIMENSIONI	ANNO	RIF ORIGINALE	RIF CORAM	NOTE
DUNA					
Tutti i tipi	31,93x20		5949990	**CC005**	20 denti
	31,93x20		5949990R	**CC009**	20 denti
Duna	32x20	86-90	7702195	**CC018**	20 denti
ELBA					
Elba CSL	32x20	91-96	7702195	**CC018**	20 denti
FIORINO					
Pick up BZ/DS t.896388	28x20	93->	7508720	**CC007**	20 denti
Fiorino	32x20	88-93	7702195	**CC018**	20 denti
1301 CARB. RL / 1372 SPI RL /1530 SPI RL	32x20	93-01	7702195	**CC018**	20 denti
1697 DS RL	32x20	93-01	7702195	**CC018**	20 denti
1697TB/DS RL	32x22	93-01	46448513	**CC019**	22 denti
IDEA					
1.2 16V	31,93x21	04->	46307552	**CC025**	21 denti
1.4 16V	31,93x21	04->	46307552	**CC025**	21 denti
1.9 JTD	35,5x24	04->	46307676	**CC026**	24 denti
1910 JTD	35,5x24	04->	46307676	**CC026**	24 denti
MAREA					
1370 12v 80cv 59KW Vet. 0176271/0180746/5054833	32x20	96-99	7702195	**CC018**	20 denti
1.2 16v Gamma 99	32x22	99-02	46448513	**CC019**	22 denti
1.6 Bipower Gamma 99/ 16v	32x22	99-02	46448513	**CC019**	22 denti
1370 12v 80cv 59KW Vet. 0176272/0180747/5054834	32x22	96-99	46448513	**CC019**	22 denti
1580 16v 103cv 75KW / Bipower	32x22	96-99	46448513	**CC019**	22 denti
MILLE					
994 SPI Clip/ 1372 SPI Clip/ 1697 DS Clip	32x20	95-97	7702195	**CC018**	20 denti
1.0 SPI/ 1697 DS	32x20	94-95	7702195	**CC018**	20 denti
MULTIPLA					
1580 16v / Bipower/Blupower / 1596 16v BZ/GLP/MET	32x22	98-00	46448513	**CC019**	22 denti
1.6 16v	32x22	98-00	46448513	**CC019**	22 denti
NUOVA PANDA					
45	29x20		5946475	**CC004**	20 denti

CROCIERE TRIPODE SEMIASSE
CROSS JOINTS
CROISILLONS

follows FIAT

MODELLO	DIMENSIONI	ANNO	RIF ORIGINALE	RIF CORAM	NOTE
NUOVA RITMO					
Tutti i tipi	31,93x20		5949990	**CC005**	20 denti
Tutti i tipi	31,93x20		5949990R	**CC009**	20 denti
PALIO					
1108 CARB. 2V Extra Europa	32x20	97-99	7702195	**CC018**	20 denti
1242 8v 2v Extra Europa Rest. 2002	32x20	02->	7702195	**CC018**	20 denti
1242 Berlina Weekend Europa/1242 MPI 8v 2v	32x20	97-01	7702195	**CC018**	20 denti
1242 MPI 2v Extra Europa	32x20	97-00	7702195	**CC018**	20 denti
1242 MPI 8v Weekend Europa/ 2v Extra Europa	32x20	02->	7702195	**CC018**	20 denti
1242 SW Weekend Europa Vet. 6238336	32x20	97-99	7702195	**CC018**	20 denti
1372 SPI 2V Extra Europa/ Weekend Extra Europa	32x20	97-99	7702195	**CC018**	20 denti
1372 SPI Weekend Extra Europa/Polonia	32x20	97-01	7702195	**CC018**	20 denti
994 MPI 2V Extra Europa	32x20	97-01	7702195	**CC018**	20 denti
1.9 DS 2v Extra Europa Rest. 2002	32x22	97-01	46448513	**CC019**	22 denti
1108 CARB. 2V Extra Europa	32x22	99-01	46448513	**CC019**	22 denti
1242 16v Weekend/Europa /Extra Europa Rest. 2002	32x22	02->	46448513	**CC019**	22 denti
1242 8v/16v 2v Extra Europa Rest. 2002	32x22	02->	46448513	**CC019**	22 denti
1242 Berlina Weekend Europa/1.2 SW Week.Europa	32x22	99-01	46448513	**CC019**	22 denti
1242 Berlina/SW Weekend Europa/MPI 2v EE	32x22	97-01	46448513	**CC019**	22 denti
1242 MPI 8v 2v Extra Europa	32x22	97-01	46448513	**CC019**	22 denti
1242 Weekend Extra Europa	32x22	97-01	46448513	**CC019**	22 denti
1372 SPI 2v Extra Europa/Turchia	32x22	99-01	46448513	**CC019**	22 denti
1372 SPI Weekend Extra Europa/Turchia	32x22	99-01	46448513	**CC019**	22 denti
1461 MPI 2v Weekend/Extra Europa Rest 2002	32x22	02->	46448513	**CC019**	22 denti
1580 MPI 16v/ 2v Weekend/Extra Europa/SW	32x22	97-01	46448513	**CC019**	22 denti
1596 16v Weekend Europa Rest.02	32x22	02->	46448513	**CC019**	22 denti
1596 MPI 16v Weekend EE/ 16v 2v EE/ SW week.E.	32x22	01->	46448513	**CC019**	22 denti
1697 DS 2v Extra Europa	32x22	97-99	46448513	**CC019**	22 denti
1697 TDS SW Weekend Europa/WEE 46/51/53KW	32x22	01->	46448513	**CC019**	22 denti
1910 DS 2v Extra Europa Rest. 2002	32x22	02->	46448513	**CC019**	22 denti
1910 DS Weekend Europa Rest. 2002	32x22	02->	46448513	**CC019**	22 denti
PANDA					
1.3 JTD	31,93x21	03->	46307552	**CC025**	21 denti
1.3 16V	31,93x21	03->	46307552	**CC025**	21 denti
45	25x20		4314781	**CC001**	20 denti
4x2 RL/86 Vet. 5357713	29x20	86-91	5946475	**CC004**	20 denti
4x4 R/86 Vet. 5357713	29x20	86-91	5946475	**CC004**	20 denti
4x2 RL/86 Vet. 5357714	29x19	86-91	7540062	**CC006**	19 denti
4x2/4x4 MAQ. 91	29x19	91-03	7540062	**CC006**	19 denti
4x4 R/86 Vet. 5357714	29x19	86-91	7540062	**CC006**	19 denti
750-1000	29x19		7540062	**CC006**	19 denti
DS	29x19	86-93	7540062	**CC006**	19 denti

CROCIERE TRIPODE SEMIASSE
CROSS JOINTS
CROISILLONS

follows FIAT

MODELLO	DIMENSIONI	ANNO	RIF ORIGINALE	RIF CORAM	NOTE
PUNTO					
1.1 SPI / 1.2 SPI /55-60-75-90	29x19	93-97	7540062	**CC006**	19 denti
1108 SPI Gamma 97	29x19	97-99	7540062	**CC006**	19 denti
1.2 60	31,93x21	94-99	46307552	**CC025**	21 denti
1.2 60 (188.030,.050,.130,.150,.230,.250)	31,93x21	99->	46307552	**CC025**	21 denti
1.2 75	31,93x21	94-99	46307552	**CC025**	21 denti
1.2 85 16V	31,93x21	97-99	46307552	**CC025**	21 denti
1.2 16V 80 (188.233,.235,.253,.255,.333,.353,.639)	31,93x21	99->	46307552	**CC025**	21 denti
1.2 8V-16V	31,93x21	99-03	46307552	**CC025**	21 denti
1.2 Natural Power	31,93x21	03->	46307552	**CC025**	21 denti
1242 SPI Cabrio	29x19	93-97	7540062	**CC006**	19 denti
1242 SPI Gamma 97/ Cabrio Gamma 97	29x19	97-99	7540062	**CC006**	19 denti
1.2 MPI 55-60-75-90	32x20	93-97	7702195	**CC018**	20 denti
1242 MPI 8v/16v Gamma 97/ Cabio Gamma 97	32x20	97-99	7702195	**CC018**	20 denti
1242 8V-16V FL.'03	31,93x21	03->	46307552	**CC025**	21 denti
1242 8V BZ/MET	31,93x21	99-03	46307552	**CC025**	21 denti
1.4	31,93x21	03->	46307552	**CC025**	21 denti
1.4 16V FL.'03	31,93x21	03->	46307552	**CC025**	21 denti
1580 MPI Cabrio/ 1.6 MPI 55-60-75-90/ 1697 DS	32x20	93-97	7702195	**CC018**	20 denti
1697 DS Gamma 97	32x20	97-99	7702195	**CC018**	20 denti
1697 TDS 63cv	32x22	93-97	46448513	**CC019**	22 denti
1.9 DS	31,93x21	99-03	46307552	**CC025**	21 denti
1.9 DS 60 (188.031,.051,.231,.251)	31,93x21	99->	46307552	**CC025**	21 denti
1.9 JTD	35,5x24	03->	46307676	**CC026**	24 denti
1910 JTD	35,5x24	03->	46307676	**CC026**	24 denti
PUNTO Cabriolet					
1.2 60	31,93x21	94-00	46307552	**CC025**	21 denti
1.2 85 16V	31,93x21	97-00	46307552	**CC025**	21 denti
REGATA					
Tutti i tipi	31,93x20		5949990	**CC005**	20 denti
Tutti i tipi	31,93x20		5949990R	**CC009**	20 denti
Tutti i tipi	32x20		7702195	**CC018**	20 denti
RITMO					
Tutti i tipi	28x20		4247393	**CC002**	20 denti
NUOVA RITMO					
Tutti i tipi	32x20		7702195	**CC018**	20 denti

CROCIERE TRIPODE SEMIASSE
CROSS JOINTS
CROISILLONS

follows FIAT

MODELLO	DIMENSIONI	ANNO	RIF ORIGINALE	RIF CORAM	NOTE
SEICENTO					
899 SPI / 1108 MPI/SPI	29x19	98->	7540062	**CC006**	19 denti
SIENA					
1242 MPI 8v Extra Europa Rest.2002	32x20	02->	7702195	**CC018**	20 denti
1242 MPI Extra Europa	32x20	97-01	7702195	**CC018**	20 denti
1372 SPI Extra Europa/ Polonia	32x20	97-01	7702195	**CC018**	20 denti
1580 MPI 16v Extra Europa	32x20	97-01	7702195	**CC018**	20 denti
1242 MPI 8v /16v Extra Europa Rest.2002	32x22	02->	46448513	**CC019**	22 denti
1242 MPI Extra Europa	32x22	97-01	46448513	**CC019**	22 denti
1372 SPI Extra Europa	32x22	99-01	46448513	**CC019**	22 denti
1461 MPI Extra Europa Rest 2002	32x22	02->	46448513	**CC019**	22 denti
1580 MPI 16v Extra Europa	32x22	97-01	46448513	**CC019**	22 denti
1596 16v Extra Europa	32x22	99-01	46448513	**CC019**	22 denti
1596 16v Extra Europa Rest.2002	32x22	02->	46448513	**CC019**	22 denti
1697 DS/TDS Extra Europa	32x22	97-01	46448513	**CC019**	22 denti
1910 DS Extra Europa Rest. 2002	32x22	02->	46448513	**CC019**	22 denti
STILO					
1.2 16V (192_XA1B)	31,93x21	02->	46307552	**CC025**	21 denti
1.4 16V F.L.L.2003	31,93x21	03->	46307552	**CC025**	21 denti
1.4 16V	31,93x21	04->	46307552	**CC025**	21 denti
1.6 16V (192_XB1A)	31,93x21	01->	46307552	**CC025**	21 denti
1.6 16V F.L.L.2003	31,93x21	03->	46307552	**CC025**	21 denti
1.9 JTD (192_XE1A)	35,5x24	01->	46307676	**CC026**	24 denti
1.9 JTD F.L.L.2003	35,5x24	03->	46307676	**CC026**	24 denti
STILO MultiWagon					
1.4 16V	31,93x21	04->	46307552	**CC025**	21 denti
1.6 16V	31,93x21	03->	46307552	**CC025**	21 denti
1.9 JTD	35,5x24	03->	46307676	**CC026**	24 denti
STRADA					
1242/ MPI 8v	32x22	99->	46448513	**CC019**	22 denti
1697 TDS/ 1.9 DS	32x22	99->	46448513	**CC019**	22 denti
TEMPRA					
1370-1580/1930 Aspirato D-TD	32x20	90-93	7702195	**CC018**	20 denti
1372 Carb./ SPI Maq.93/ 1580 Carb/MPI/SPI	32x20	93-96	7702195	**CC018**	20 denti
1930 Aspirato MQ. 93 D.TD	32x20	93-96	7702195	**CC018**	20 denti

CROCIERE TRIPODE SEMIASSE
CROSS JOINTS
CROISILLONS

follows FIAT

MODELLO	DIMENSIONI	ANNO	RIF ORIGINALE	RIF CORAM	NOTE
TIPO					
1100-1370-1580/ 1697 D/TDS/ 1930 Aspirato D/TDS	32x20	88-93	7702195	**CC018**	20 denti
1108 SPI MQ93/1372 Carb/SPI MQ93/1580	32x20	93-95	7702195	**CC018**	20 denti
1697 Maq. 93 D/TD/ 1930	32x20	93-95	7702195	**CC018**	20 denti
UNO					
Tutti i tipi	29x20		5946475	**CC004**	20 denti
1.0 R/89	29x19	89-95	7540062	**CC006**	19 denti
1.1 Carb. Mondo t. 1390775	29x19	98-02	7540062	**CC006**	19 denti
1.1 R/89 49cv	29x19	89-95	7540062	**CC006**	19 denti
1.3 Aspirato Diesel R/89	29x19	89-95	7540062	**CC006**	19 denti
1.5 SPI R/89	29x19	93-95	7540062	**CC006**	19 denti
1108/1116 R/89	29x19	89-95	7540062	**CC006**	19 denti
1370 SPI R/89	29x19	93-95	7540062	**CC006**	19 denti
903 R/89 / 994 Carb. R/89	29x19	89-95	7540062	**CC006**	19 denti
Fire/Diesel 19 Dent.	29x19		7540062	**CC006**	19 denti
1.0 Carb. Mondo/ 1.0 Mondo	32x20	98->	7702195	**CC018**	20 denti
1.1 Carb. Mondo t. 1390776	32x20	02->	7702195	**CC018**	20 denti
1.5 SPI R/89	32x20	89-92	7702195	**CC018**	20 denti
1242 SPI Mondo	32x20	98->	7702195	**CC018**	20 denti
1367 Turbo Diesel R/89	32x20	89-95	7702195	**CC018**	20 denti
1370 Carb. Mondo	32x20	98->	7702195	**CC018**	20 denti
1370 Carb./SPI R/89	32x20	98->	7702195	**CC018**	20 denti
1697 Aspirato Diesel R/89	32x20	89-95	7702195	**CC018**	20 denti
1697 DS Mondo	32x20	98->	7702195	**CC018**	20 denti
1930 Aspirato Diesel R/89	32x20	89-95	7702195	**CC018**	20 denti
994 SPI R/89	32x20	89-95	7702195	**CC018**	20 denti
CS	32x20	88-91	7702195	**CC018**	20 denti

CROCIERE TRIPODE SEMIASSE
CROSS JOINTS
CROISILLONS

FORD

MODELLO	DIMENSIONI	ANNO	RIF ORIGINALE	RIF CORAM	NOTE
CORCEL					
DEL REY 83	29,95x30		(ETMA) TR 1101	**CC023**	30 denti
CORCEL 1					
	29,95x20		(ETMA) TR 1100	**CC022**	20 denti
CORCEL 2					
	29,95x30		(ETMA) TR 1101	**CC023**	30 denti
FIESTA					
1.6 Power/Rocam	30,4x21		XS61-4K258-AA	**CC030**	21 denti
SIERRA					
1.6	29,93x22		(ETMA) TR 1108	**CC013**	22 denti

LANCIA

DEDRA					
1.6 BZ	32x20	89-94	7702195	**CC018**	20 denti
1580 MPI 8v FL.94/ 1580 SPI FL.94	32x20		7702195	**CC018**	20 denti
1580 MPI 16v FL.94	32x22		46448513	**CC019**	22 denti
DELTA					
1300	28x20		4314783	**CC002**	20 denti
1500	31,93x20		5949990	**CC005**	20 denti
1500	31,93x20		5949990R	**CC009**	20 denti
1.1 Carb. R 86	32x20	86-92	7702195	**CC018**	20 denti
1.3 Carb. R 86 Vet. 626853	32x20	86-92	7702195	**CC018**	20 denti
1.5 Carb. R 86 Vet. 626853	32x20	86-92	7702195	**CC018**	20 denti
Nuova Delta 1372 SPI / 1580 8v	32x20		7702195	**CC018**	20 denti
Nuova Delta 1580 16V/ 90 cv/103cv	32x22		46448513	**CC019**	22 denti

CROCIERE TRIPODE SEMIASSE
CROSS JOINTS
CROISILLONS

follows LANCIA

MODELLO	DIMENSIONI	ANNO	RIF ORIGINALE	RIF CORAM	NOTE
LYBRA					
1580 16v BZ/ 1596 16v BZ	32x22	99->	46448513	**CC019**	22 denti
MUSA					
1.4	31,93x21	04->	46307552	**CC025**	21 denti
1.9 Multijet	35,5x24	04->	46307676	**CC026**	24 denti
PRISMA					
1300-1500	31,93x20		5949990	**CC005**	20 denti
1300-1500	31,93x20		5949990R	**CC009**	20 denti
1.3 - 1.5	32x20		7702195	**CC018**	20 denti
Y					
1.2	31,93x21	03->	46307552	**CC025**	21 denti
1.2 (840AA, 840AF1A)	31,93x21	96->	46307552	**CC025**	21 denti
1.2 16V (840AG1A)	31,93x21	00->	46307552	**CC025**	21 denti
1.2 8V-16V	31,93x21	03->	46307552	**CC025**	21 denti
1.2 8v FL 2000 Vet. 3559479	29x19	00-03	7540062	**CC006**	19 denti
1.2 8V FL 2000 Vet. 3559480	31,93x21	00-03	46307552	**CC025**	21 denti
1.2 16V FL.2000	31,93x21	00-03	46307552	**CC025**	21 denti
1108 SPI Cambio 5 marce	29x19	95-00	7540062	**CC006**	19 denti
1242 SPI 8v Cambio 5 marce	29x19	95-00	7540062	**CC006**	19 denti
1242 MPI 16v Vet. 3395977	32x20	95-00	7702195	**CC018**	20 denti
1242 MPI 16V Vet. 3395978	31,93x21	95-00	46307552	**CC025**	21 denti
1242 SPI 8v Cambio 6 marce Vet. 3395977	32x20	95-00	7702195	**CC018**	20 denti
1242 SPI 8v Cambio 6 marce Vet. 3395978	31,93x21	95-00	46307552	**CC025**	21 denti
1370 12v 75cv 55KW / 80cv 59KW	32x20	95-00	7702195	**CC018**	20 denti
1.4	31,93x21	03->	46307552	**CC025**	21 denti
1.4 16v	32x22	03->	46448513	**CC019**	22 denti
1.4 16V	31,93x21	03->	46307552	**CC025**	21 denti
Y 10					
FL 889	29x19	89-92	7540062	**CC006**	19 denti
R. 92	29x19	92-95	7540062	**CC006**	19 denti

PLYMOUTH

	29,95x30	83-95	(ETMA) TR 1101	**CC023**	30 denti

CROCIERE TRIPODE SEMIASSE
CROSS JOINTS
CROISILLONS

RENAULT

MODELLO	DIMENSIONI	ANNO	RIF ORIGINALE	RIF CORAM	NOTE
R-9					
	29,93x22		(ETMA) TR 1108	**CC013**	22 denti
R-11					
	29,93x22		(ETMA) TR 1108	**CC013**	22 denti
R-12					
	29,93x22		(ETMA) TR 1108	**CC013**	22 denti
CLIO					
	29,93x22		(ETMA) TR 1108	**CC013**	22 denti
II SERIE	29,95x29		7700113959	**CC027**	29 denti
ESPACE					
	29,95x29		7700113959	**CC027**	29 denti
EXPRESS					
	29,93x22		(ETMA) TR 1108	**CC013**	22 denti
	29,95x29		7700113959	**CC027**	29 denti
KANGOO					
	29,95x29		7700113959	**CC027**	29 denti
LAGUNA					
	29,95x29		7700113959	**CC027**	29 denti
MEGANE					
	29,93x22		(ETMA) TR 1108	**CC013**	22 denti
MEGANE Scenic					
	29,95X29		7700113959	**CC027**	29 denti
NEVADA					
	29,95x29		7700113959	**CC027**	29 denti

CROCIERE TRIPODE SEMIASSE
CROSS JOINTS
CROISILLONS

follows RENAULT

MODELLO	DIMENSIONI	ANNO	RIF ORIGINALE	RIF CORAM	NOTE
SUPER 5					
1.6 D	30x21	85-86	7701638464	**CC028**	21 denti
SUPER 5 furgonato					
1.6 D	30x21	84-96	7701638464	**CC028**	21 denti
TWINGO					
	29,25x29		7700113959	**CC027**	29 denti

TOPAZ

GUIA 4 CIL.					
	29,93x28		(ETMA) TR 1188	**CC014**	28 denti

TOYOTA

COROLLA					
Diesel	38,12x23		(ETMA) TR 1171	**CC015**	23 denti
COROLLA					
	29,93x23		(ETMA) TR 1174	**CC016**	23 denti

CROCIERE TRIPODE SEMIASSE
CROSS JOINTS
CROISILLONS
LISTA DI COMPARAZIONE - CROSS REFERENCES - LISTE CORRISPONDANCE

CORAM	APPLICAZIONE	MISURE	RIF. ORIGINALE	OMCAR	ETMA	ALTRI RIF.
CC001	FIAT	25X20	4247799	TS 00601		
CC001	FIAT	25X20	4314781	TS 00601		
CC001	FIAT	25X20	4247799	TS 00601		
CC002	FIAT	28x20	4247393	TS 00606		
CC002	FIAT	28x20	4314783	TS 00606		
CC004	FIAT	29x20	5946475	TS 00600		
CC004	FIAT	29x20	91104366	TS 00600		
CC005	FIAT	31,93x20	5949990	TS 00603		
CC005	FIAT	31,93x20	7702195	TS 00603		
CC006	FIAT-LANCIA	29x19	7540062	TS 00602		
CC006	FIAT-LANCIA	29x19	7566182	TS 00602		
CC007	FIAT	28x20	7508720	TS 00609		
CC009	FIAT	31,93x20	5949990R			
CC009	FIAT	31,93x20	7702195R			
CC013	FORD-RENAULT	29,93x22			TR1108	(500 MILLAS) TR15108
CC013	FORD-RENAULT	29,93x22			TR1108	(SPICER/ALBARUS) 5-13154X
CC013	FORD-RENAULT	29,93x22			TR1108	(TOLEDO) TRT108
CC014	CHRYSLER	29,93x28			TR1188	(500 MILLAS) TR15188
CC014	CHRYSLER	29,93x28			TR1188	(TOLEDO) TRT188
CC015	TOYOTA	38,12x23			TR1171	(500 MILLAS) TR15171
CC015	TOYOTA	38,12x23			TR1171	(TOLEDO) TRT171
CC016	TOYOTA				TR1174	(500 MILLAS) TR15174
CC016	TOYOTA	29,93x23			TR1174	(TOLEDO) TRT174
CC017	CHEVROLET	36,99x32			TR1160	(500 MILLAS) TR15160
CC017	CHEVROLET	36,99x32			TR1160	(TOLEDO) TRT160
CC018	FIAT-LANCIA	32x20	4469834	TS 00611		
CC018	FIAT-LANCIA	32x20	5949990	TS 00611		
CC018	FIAT-LANCIA	32x20	7702194	TS 00611		
CC018	FIAT-LANCIA	32x20	7702195	TS 00611		
CC019	ALFA-FIAT-LANCIA	32x22	4644851	TS 00613		
CC019	ALFA-FIAT-LANCIA	32x22	60813073	TS 00613		
CC022	FORD	29,95x20			TR 1100	
CC023	CHRYSLER	29,95x30			TR 1101	
CC023	DODGE-FORD	29,95x30			TR 1101	
CC024	DAEWOO	27,77x19	44103-781300		TR 1197	
CC025	FIAT-LANCIA	31,93x21	46307552	TS 00615		BIRTH : 3383
CC026	FIAT-LANCIA	35,5x24	46307676	TS 00614		BIRTH : 3385
CC027	RENAULT	29,95x29	7700113959			
CC027	RENAULT	29,95x29	7700111779			
CC028	RENAULT	30x21	7701638464	TS 00608		
CC030	FORD	30,4x21	XS61-4K258-AA			

CROCIERE TRIPODE SEMIASSE
CROSS JOINTS
CROISILLONS
LISTA DI COMPARAZIONE - CROSS REFERENCES - LISTE CORRISPONDANCE

DIMENSIONI	CORAM
25X20	CC001
27,77x19	CC024
28x20	CC002
28x20	CC007
29,93x22	CC013
29,93x23	CC016
29,93x28	CC014
29,95x20	CC022
29,95x29	CC027
29,95x30	CC023
29x19	CC006
29x20	CC004
30,4x21	CC030
30x21	CC028
31,93x20	CC005
31,93x20	CC009
31,93x21	CC025
32x20	CC018
32x22	CC019
35,5x24	CC026
36,99x32	CC017
38,12x23	CC015

ALFA	CORAM
4644851	CC019
60813073	CC019

DAEWOO	CORAM
44103-781300	CC024

FIAT	CORAM
4247393	CC002
4247799	CC001
4247799	CC001
4314781	CC001
4314783	CC002
4469834	CC018
4644851	CC019
5946475	CC004
5949990	CC005
5949990	CC018
7508720	CC007
7540062	CC006
7566182	CC006
7702194	CC018
7702195	CC005
7702195	CC018
46307552	CC025
46307676	CC026
60813073	CC019
91104366	CC004
5949990R	CC009
7702195R	CC009

FORD	CORAM
XS61-4K258-AA	CC030

LANCIA	CORAM
4469834	CC018
4644851	CC019
5949990	CC018
7540062	CC006
7566182	CC006
7702194	CC018
7702195	CC018
46307552	CC025
46307676	CC026
60813073	CC019

RENAULT	CORAM
7700111779	CC027
7700113959	CC027
7701638464	CC028

ETMA	CORAM
TR 1100	CC022
TR 1101	CC023
TR 1197	CC024
TR1108	CC013
TR1160	CC017
TR1171	CC015
TR1174	CC016
TR1188	CC014

OMCAR	CORAM
TS 00600	CC004
TS 00601	CC001
TS 00601	CC001
TS 00602	CC006
TS 00603	CC005
TS 00606	CC002
TS 00608	CC028
TS 00609	CC007
TS 00611	CC018
TS 00613	CC019
TS 00614	CC026
TS 00615	CC025

ALTRI RIF.	CORAM
(500 MILLAS) TR15108	CC013
(500 MILLAS) TR15160	CC017
(500 MILLAS) TR15171	CC015
(500 MILLAS) TR15174	CC016
(500 MILLAS) TR15188	CC014
(SPICER/ALBARUS) 5-13154X	CC013
(TOLEDO) TRT108	CC013
(TOLEDO) TRT160	CC017
(TOLEDO) TRT171	CC015
(TOLEDO) TRT174	CC016
(TOLEDO) TRT188	CC014
BIRTH : 3383	CC025
BIRTH : 3385	CC026

GIUNTI OMOCINETICI
C-V JOINTS
JOINTS HOMOCINETIQUES

ALFA

MODELLO	DIMENSIONI	ANNO	RIF ORIGINALE	RIF CORAM	NOTE
145					
1.4 i.e. 16V T.S.	25x25x52	96-01	60812753	**CVJ005**	internal groove
1.6 i.e. 16V T.S.	25x25x52	96-01	60812753	**CVJ005**	internal groove
1.8 i.e. 16V T.S.	25x25x52	96-98	60812753	**CVJ005**	internal groove
1.9 TD	25x25x52	94-99	60812753	**CVJ005**	internal groove
2.0 16V T.S.	25x25x52	95-01	60812753	**CVJ005**	internal groove
146					
1.4 i.e. 16V T.S.	25x25x52	96-01	60812753	**CVJ005**	internal groove
1.6 i.e. 16V T.S.	25x25x52	96-01	60812753	**CVJ005**	internal groove
1.8 i.e. 16V T.S.	25x25x52	96-01	60812753	**CVJ005**	internal groove
1.9 TD	25x25x52	94-99	60812753	**CVJ005**	internal groove
2.0 16V T.S.	25x25x52	95-01	60812753	**CVJ005**	internal groove
155					
1.6 16V T.S.	25x25x52	96-98	60812753	**CVJ005**	internal groove

AUDI

AUDI 80-90					
1.3 - 1.6 - 1.8	22x30x51	80-87	171 407 311 K	**CVJ021**	
1.9 - 1.9 CD	22x30x51	81-83	171 407 311 K	**CVJ021**	
2.2	22x30x51	80-82	171 407 311 K	**CVJ021**	
1.6 D - 1.6 TD	22x30x51	80-91	171 407 311 K	**CVJ021**	

GIUNTI OMOCINETICI
C-V JOINTS
JOINTS HOMOCINETIQUES

DAEWOO

MODELLO	DIMENSIONI	ANNO	RIF ORIGINALE	RIF CORAM	NOTE
LANOS (KLAT)					
1.4 - 1.5	22x29x52	97->	96257803	**CVJ016**	
1.6 16V	33x29x52	97->	96256954	**CVJ017**	
LANOS Tre Volumi					
1.4 - 1.5	22x29x52	97->	96257803	**CVJ016**	
1.6 16V	33x29x52	97->	96256954	**CVJ017**	
NUBIRA (KLAJ)					
1.6 16V - 2.0 16V	33x29x52	97->	96256954	**CVJ017**	
NUBIRA Tre Volumi					
1.6 16V - 2.0 16V	33x29x52	97->	96256954	**CVJ017**	
NUBIRA Wagon					
1.6 16V - 2.0 16V	33x29x52	97->	96256954	**CVJ017**	

GIUNTI OMOCINETICI
C-V JOINTS
JOINTS HOMOCINETIQUES

FIAT

MODELLO	DIMENSIONI	ANNO	RIF ORIGINALE	RIF CORAM	NOTE
127					
1.0	20x20x43,1	71-80	40871120	**CVJ001**	
1.0	22x20x48	80-87	4390952	**CVJ002**	
1.3 D	22x20x48	81-87	4390952	**CVJ002**	
128					
1.1 - 1.3	20x20x43,1	69-80	4247399	**CVJ001**	
1.1 -1.3 / COUPE	20x20x43,1	69-80	4247399	**CVJ001**	
1.1 -1.3 / PANORAMA	20x20x43,1	69-80	4247399	**CVJ001**	
1.1 - 1.3	22x20x48	81-82	4475837	**CVJ002**	
1.1 -1.3 / COUPE	22x20x48	81-82	4475837	**CVJ002**	
1.1 -1.3 / PANORAMA	22x20x48	81-82	4475837	**CVJ002**	
147 (BRASILE)					
1.0 - 1.3	20x20x43,1	76->	4247399	**CVJ001**	
BRAVO/BRAVA					
1.4 12v - 1.6 - 1.9 Diesel	22x20x46	95->	7659169	**CVJ003**	
1.9 TD 100 S (182.BF)	25x25x52	96-01	46307032	**CVJ005**	internal groove
1.9 TD 75 S (182.BF)	25x25x52	96-01	46307032	**CVJ005**	internal groove
FIORINO					
1.1 - 1.3 - 1.5	20x20x43,1	88->	4247399	**CVJ001**	
1.7 Diesel (60)	22x20x48	88->	4475837	**CVJ002**	
MAREA					
1.8 115 16V	25x25x52	96->	46307032	**CVJ005**	internal groove
1.9 TD 100	25x25x52	96->	46307032	**CVJ005**	internal groove
1.9 TD 75	25x25x52	96->	46307032	**CVJ005**	internal groove
2.0 150 20V	25x25x52	96-99	46307032	**CVJ005**	internal groove
MAREA Weekend					
1.8 115 16V	25x25x52	96->	46307032	**CVJ005**	internal groove
1.9 TD 100 - 1.9 TD 75	25x25x52	96->	46307032	**CVJ005**	internal groove
2.0 150 20V	25x25x52	96-99	49307032	**CVJ005**	internal groove
PANDA					
Tutti i modelli - All types	20x20x43,1	80->	4247399	**CVJ001**	
PUNTO (I SERIE)					
1.1 - 1.2 - 1.6	22x20x46	93->	7659169	**CVJ003**	

GIUNTI OMOCINETICI
C-V JOINTS
JOINTS HOMOCINETIQUES

follows FIAT

MODELLO	DIMENSIONI	ANNO	RIF ORIGINALE	RIF CORAM	NOTE
PUNTO					
1.4 GT Turbo	25x25x52	94-96	46307032	**CVJ005**	internal groove
1.7 TD	25x25x52	94-99	46307032	**CVJ005**	internal groove
PUNTO Van					
1.7 TD	25x25x52	96-00	46307032	**CVJ005**	internal groove
REGATA					
1.3	22x20x48	83-90	4475837	**CVJ002**	
1.7 Diesel	22x20x48	83-90	4475837	**CVJ002**	
1.9 Diesel	22x20x48	83-90	4475837	**CVJ002**	
RITMO					
1.1 -1.3	22x20x48	78-87	4475837	**CVJ002**	
1.5	22x20x48	80-87	4475837	**CVJ002**	
1.7 Diesel	22x20x48	80-87	4475837	**CVJ002**	
SPAZIO (BRASILE)					
1.0 - 1.3	20x20x43,1	83-84	4247399	**CVJ001**	
TEMPRA					
1.4 - 1.6	22x20x46	90->	7659169	**CVJ003**	
1.9 Diesel	22x20x46	90->	7659169	**CVJ003**	
1.8 - 2.0	25x25x52	90->	82413699	**CVJ004**	
TIPO					
1.1 - 1.4 - 1.6	22x20x46	88-90	7659169	**CVJ003**	
1.7 - 1.9 Diesel	22x20x46	88-90	7659169	**CVJ003**	
1.7 - 1.9 Diesel ABS	25x25x52	88-90	82449123	**CVJ004**	
1.9 Turbo Diesel ABS	25x25x52	88->	82449123	**CVJ004**	
UNO					
0.9 - 1.1 - 1.3 - 1.5	20x20x43,1	83->	5998706	**CVJ001**	
1.0	20x20x43,1	85->	5998706	**CVJ001**	
1.3 Diesel	20x20x43,1	83->	5998706	**CVJ001**	
1.3 Turbo Diesel - 1.7 Diesel	22x20x48	86->	7656786	**CVJ002**	

GIUNTI OMOCINETICI
C-V JOINTS
JOINTS HOMOCINETIQUES

KIA

MODELLO	DIMENSIONI	ANNO	RIF ORIGINALE	RIF CORAM	NOTE
FESTIVA					
1.3	24x20x52	90-93	B00525400	**CVJ023**	
PRIDE					
1.1 i	24x19x52	91->	B00225500	**CVJ024**	
1.3 i	24x19x52	90->	B00225500	**CVJ024**	

LADA

CLASSIC					
	22x22x46		2108-2215011	**CVJ011**	
SAMARA					
1.1 40 kW (55HP)	22x22x50	86->	2108-2215010	**CVJ010**	
1.3 48 kW (65HP)	22x22x50	86->	2108-2215010	**CVJ010**	
1.5 55 kW (75HP)	22x22x50	86->	2108-2215010	**CVJ010**	
(GIUNTO INTERNO - INNER C-V JOINT) 2108 - 2109	24x22x35			**CVJ012**	

MAZDA

121 I					
1.1	24x19x52	87-90	B00225600	**CVJ024**	
121 II					
1.3 16V	24x19x52	90-96	B00225600	**CVJ024**	

GIUNTI OMOCINETICI
C-V JOINTS
JOINTS HOMOCINETIQUES

SEAT

MODELLO	DIMENSIONI	ANNO	RIF ORIGINALE	RIF CORAM	NOTE
CORDOBA					
1.4 i	22x30x51	94-99	171407311F	**CVJ021**	
1.6 i	22x30x51	93-99	171407311F	**CVJ021**	
1.9 Diesel	22x30x51	93-96	171407311F	**CVJ021**	
1.9 SDI	22x30x51	96-99	171407311F	**CVJ021**	
CORDOBA Vario					
1.4 i	22x30x51	96-99	171407311F	**CVJ021**	
1.6 i	22x30x51	96-99	171407311F	**CVJ021**	
1.9 SDI	22x30x51	96-99	171407311F	**CVJ021**	
IBIZA II					
1.0	22x30x51	93-96	171407311F	**CVJ021**	
1.3 i	22x30x51	93-96	171407311F	**CVJ021**	
1.4 i - 1.6 i	22x30x51	93-99	171407311F	**CVJ021**	
1.9 Diesel	22x30x51	93-96	171407311F	**CVJ021**	
INCA					
1.4 i - 1.6 i - 1.9 Diesel - 1.9 SDI	22x30x51	95->	171407311F	**CVJ021**	
TOLEDO					
1.6 i	22x30x51	96-99	171407311F	**CVJ021**	
1.9 Diesel	22x30x51	91-99	171407311F	**CVJ021**	

GIUNTI OMOCINETICI
C-V JOINTS
JOINTS HOMOCINETIQUES

WOLKSWAGEN

MODELLO	DIMENSIONI	ANNO	RIF ORIGINALE	RIF CORAM	NOTE
CADDY					
1.5 - 1.8	22x30x51	82-92	171 407 311 K	**CVJ021**	
CADDY I					
1.5	22x30x51	82-83	171 407 311 K	**CVJ021**	
1.6	22x30x51	83-92	171 407 311 K	**CVJ021**	
1.6 Diesel	22x30x51	82-92	171 407 311 K	**CVJ021**	
1.8	22x30x51	85-92	171 407 311 K	**CVJ021**	
CARAT					
TT	22x30x51	84->	171 407 311 K	**CVJ021**	
FOX					
TT	22x30x51	87->	171 407 311 K	**CVJ021**	
GOLF I					
1.6 Cabriolet	22x30x51	79-90	171 407 311 K	**CVJ021**	
1.8 Cabriolet	22x30x51	82-93	171 407 311 K	**CVJ021**	
GOLF II - III					
1.0 - 1.1 - 1.3 - 1.5 - 1.6 - 1.8	22x30x51	80-92	171 407 311 K	**CVJ021**	
1.4 - 1.6 - 1.8	22x30x51	83-97	171 407 311 K	**CVJ021**	
1.4 - 1.9 Diesel Variant	22x30x51	93-99	171 407 311 K	**CVJ021**	
1.6 Diesel - Turbo Diesel	22x30x51	79-91	171 407 311 K	**CVJ021**	
1.8 Syncro	22x30x51	86-91	171 407 311 K	**CVJ021**	
1.9 Diesel	22x30x51	91-97	171 407 311 K	**CVJ021**	
JETTA					
1.0 - 1.1 - 1.3 - 1.5 - 1.6 - 1.8	22x30x51	80-92	171 407 311 K	**CVJ021**	
1.4 - 1.6 -1.8	22x30x51	91-97	171 407 311 K	**CVJ021**	
1.6 Diesel - Turbo Diesel	22x30x51	79-91	171 407 311 K	**CVJ021**	
1.9 Diesel	22x30x51	91-97	171 407 311 K	**CVJ021**	
JETTA I					
1.6 GLI	22x30x51	79-82	171 407 311 K	**CVJ021**	
1.8	22x30x51	82-83	171 407 311 K	**CVJ021**	
JETTA II					
1.3	22x30x51	84-87	171 407 311 K	**CVJ021**	
1.6	22x30x51	86-91	171 407 311 K	**CVJ021**	
1.6 Diesel /Turbo Diesel	22x30x51	84-91	171 407 311 K	**CVJ021**	
1.8	22x30x51	86-90	171 407 311 K	**CVJ021**	
1.8 Syncro	22x30x51	87-91	171 407 311 K	**CVJ021**	

GIUNTI OMOCINETICI
C-V JOINTS
JOINTS HOMOCINETIQUES

follows WOLKSWAGEN

MODELLO	DIMENSIONI	ANNO	RIF ORIGINALE	RIF CORAM	NOTE
PASSAT					
1.3 - 1.6	22x30x51	80-91	171 407 311 K	**CVJ021**	
1.6 Turbo Diesel	22x30x51	88-93	171 407 311 K	**CVJ021**	
1.6 Turbo Diesel Variant	22x30x51	88-93	171 407 311 K	**CVJ021**	
1.6 Variant	22x30x51	88-91	171 407 311 K	**CVJ021**	
1.8 - 2.0	22x30x51	83->	171 407 311 K	**CVJ021**	
2.2	22x30x51	81-82	171 407 311 K	**CVJ021**	
POLO CLASSIC					
1.4 - 1.6 - 1.9 SDI	22x30x51	95-01	171 407 311 K	**CVJ021**	
POLO VARIANT					
1.4 -1.6 - 1.9 SDI	22x30x51	97-01	171 407 311 K	**CVJ021**	
SANTANA					
1.6 - 1.8 - 2.2	22x30x51	81-84	171 407 311 K	**CVJ021**	
SCIROCCO					
1.1 - 1.3	22x30x51	80-84	171 407 311 K	**CVJ021**	
1.6	22x30x51	80-89	171 407 311 K	**CVJ021**	
1.8	22x30x51	82-89	171 407 311 K	**CVJ021**	
VENTO					
1.4 - 1.6	22x30x51	91->	171 407 311 K	**CVJ021**	
1.9 Diesel	22x30x51	91->	171 407 311 K	**CVJ021**	

GIUNTI OMOCINETICI
C-V JOINTS
JOINTS HOMOCINETIQUES
LISTA DI COMPARAZIONE - CROSS REFERENCES - LISTE CORRISPONDANCE

CORAM	APPLICAZIONE	RIF. ORIGINALE	MISURE	NOTE
CVJ001	FIAT	4247399		
CVJ001	FIAT	4308412		
CVJ001	FIAT	5998706		
CVJ001	FIAT	40871120		
CVJ002	FIAT	4390952		
CVJ002	FIAT	4475837		
CVJ002	FIAT	7629457		
CVJ002	FIAT	7656786		
CVJ003	FIAT	7659169		
CVJ003	FIAT	92601903		
CVJ004	FIAT	82413699		
CVJ004	FIAT	82449123		
CVJ005	ALFA ROMEO	60812753		internal groove
CVJ005	FIAT	46307032		internal groove
CVJ005	FIAT	46307171		internal groove
CVJ010	LADA	2108-2215010		
CVJ011	LADA	2108-2215011		
CVJ012	LADA			INNER C.V. JOINTS
CVJ016	DAEWOO	96257803		
CVJ016	DAEWOO	96298465		
CVJ016	DAEWOO	96298466		
CVJ017	DAEWOO	96256953		
CVJ017	DAEWOO	96256954		
CVJ017	DAEWOO	96256965		
CVJ017	DAEWOO	96256966		
CVJ017	DAEWOO	96257801		
CVJ017	DAEWOO	96298467		
CVJ017	DAEWOO	96298468		
CVJ021	AUDI- VW	171407311 K		
CVJ021	SEAT-VW	171407311F		
CVJ021	SEAT-VW	171407311K		
CVJ021	SEAT-VW	191407311		
CVJ021	SEAT-VW	191407311H		
CVJ021	SEAT-VW	1H0407311C		
CVJ023	KIA-MAZDA	B00525600D		
CVJ023	KIA-MAZDA	B00525600		
CVJ023	KIA-MAZDA	B00525400		
CVJ023	KIA-MAZDA	B00525400D		
CVJ024	FORD-KIA-MAZDA	B00325400		
CVJ024	FORD-KIA-MAZDA	B00325600D		
CVJ024	FORD-KIA-MAZDA	B00325400D		
CVJ024	FORD-KIA-MAZDA	B00225600		
CVJ024	FORD-KIA-MAZDA	B00225500		
CVJ024	FORD-KIA-MAZDA	B00325600		
CVJ024	MAZDA	B00325600C		
CVJ024	MAZDA	B00325400C		
CVJ024	MAZDA	B00225500B		
CVJ024	MAZDA	B00225400B		
CVJ024	MAZDA	B00225600B		

GIUNTI OMOCINETICI
C-V JOINTS
JOINTS HOMOCINETIQUES
LISTA DI COMPARAZIONE - CROSS REFERENCES - LISTE CORRISPONDANCE

ALFA ROMEO	CORAM
60812753	CVJ005

AUDI	CORAM
171407311 K	CVJ021

DAEWOO	CORAM
96256953	CVJ017
96256954	CVJ017
96256965	CVJ017
96256966	CVJ017
96257801	CVJ017
96257803	CVJ016
96298465	CVJ016
96298466	CVJ016
96298467	CVJ017
96298468	CVJ017

FIAT	CORAM
4247399	CVJ001
4308412	CVJ001
4390952	CVJ002
4475837	CVJ002
5998706	CVJ001
7629457	CVJ002
7656786	CVJ002
7659169	CVJ003
40871120	CVJ001
46307032	CVJ005
46307171	CVJ005
82413699	CVJ004
82449123	CVJ004
92601903	CVJ003

FORD	CORAM
B00225500	CVJ024
B00225600	CVJ024
B00325400	CVJ024
B00325400D	CVJ024
B00325600	CVJ024
B00325600D	CVJ024

KIA	CORAM
B00225500	CVJ024
B00225600	CVJ024
B00325400	CVJ024
B00325400D	CVJ024
B00325600	CVJ024
B00325600D	CVJ024
B00525400	CVJ023
B00525400D	CVJ023
B00525600	CVJ023
B00525600D	CVJ023

LADA	CORAM
2108-2215010	CVJ010
2108-2215011	CVJ011

MAZDA	CORAM
B00225400B	CVJ024
B00225500	CVJ024
B00225500B	CVJ024
B00225600	CVJ024
B00225600B	CVJ024
B00325400	CVJ024
B00325400C	CVJ024
B00325400D	CVJ024
B00325600	CVJ024
B00325600C	CVJ024
B00325600D	CVJ024
B00525400	CVJ023
B00525400D	CVJ023
B00525600	CVJ023
B00525600D	CVJ023

SEAT	CORAM
191407311	CVJ021
171407311F	CVJ021
171407311K	CVJ021
191407311H	CVJ021
1H0407311C	CVJ021

VW	CORAM
191407311	CVJ021
171407311 K	CVJ021
171407311F	CVJ021
171407311K	CVJ021
191407311H	CVJ021
1H0407311C	CVJ021

ALL C-V JOINTS ARE AVAILABLE IN KIT

KCVY...

9

CVJ001

FIAT	4247399		
FIAT	4308412		
FIAT	599706		
FIAT	40871120		

CVJ002

FIAT	4390952		
FIAT	4475837		
FIAT	7629457		
FIAT	7656786		

CVJ003

FIAT	7659169		
FIAT	92601903		

CVJ004

FIAT	82413699		
FIAT	82449123		

CVJ005

ALFA	60812753		
FIAT	46307032		
FIAT	46307171		

CVJ010

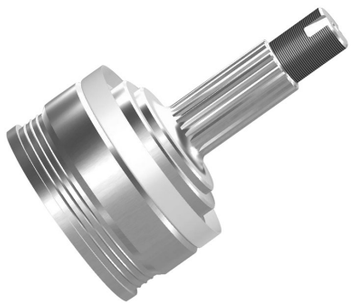

LADA	2108-2215010		

CVJ011

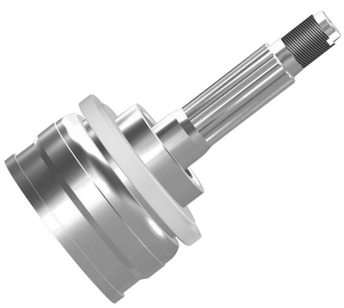

LADA	2108-2215011		

CVJ012

LADA			

CVJ016

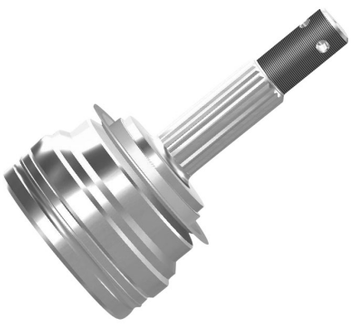

DAEWOO	96257803		
DAEWOO	96298465		
DAEWOO	96298466		

CVJ017

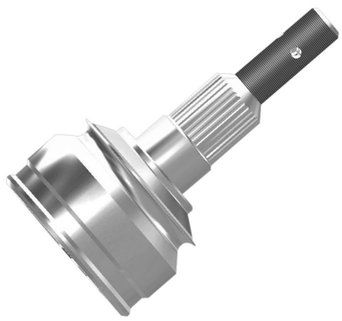

DAEWOO	96256953	DAEWOO	96298467
DAEWOO	96256954	DAEWOO	96298468
DAEWOO	96256965		
DAEWOO	96256966		
DAEWOO	96257801		

CVJ021

AUDI-VW	171407311K	SEAT-VW	1H0407311C
SEAT-VW	171407311F		
SEAT-VW	171407311K		
SEAT-VW	191407311		
SEAT-VW	191407311H		

CVJ023

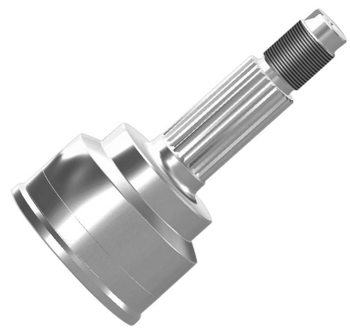

KIA-MAZDA	B00525600D		
KIA-MAZDA	B00525600		
KIA-MAZDA	B00525400		
KIA-MAZDA	B00525400D		

CVJ024

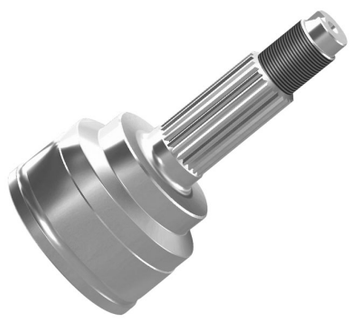

FORD-KIA-MAZDA	B00325400	MADZA	B00325600C
FORD-KIA-MAZDA	B00325600D	MADZA	B00325400C
FORD-KIA-MAZDA	B00325400D	MADZA	B00225500B
FORD-KIA-MAZDA	B00225600	MADZA	B00225400B
FORD-KIA-MAZDA	B00225500	MADZA	B00225600B

9

GHIERE BLOCCAGGIO CUSCINETTO RUOTA E SEMIASSI - PLUG FOR WHEEL BEARINGS LOCKING - FRETTE BLOCAGE ROULEMENT ROUE ET DEMI-ESSIEUX

TIPO	Modello	Versione	Dimensioni	Anno	Rif Originale	Rif Coram	Note
FIAT	127	127-127C-127CL			4243293	**G0001**	
FIAT	128				4243293	**G0001**	
FIAT	A 112				4243293	**G0001**	
FIAT	127	U.T.			4443881	**G0002**	
FIAT	UNO	Tutti i tipi			4443881	**G0002**	CON GOMMA
FIAT	128	128 3 P - 128 CL			4354049	**G0003**	

CORAM	APPLICAZIONE	ORIGINALE
G0001	FIAT	4243293
G0002	FIAT	4443881
G0003	FIAT	4354049

G001

G002

G003

PERNI FUSI A SNODO - PINS FOR STUB AXLES - PIVOTS

TIPO	Modello	Versione	Dimensioni	Anno	Rif Originale	Rif Coram	Note
FIAT	126 - 500R	TUTTI I TIPI			901085	**PF000**	2 perni con foro 4 boccole di bronzo 4 anelli reggispinta Ø 27x2,7 2 anelli rasamento Ø 23x2,7
FIAT	500 D-F-L	TUTTI I TIPI				**PF001**	2 perni con foro 4 boccole di bronzo 4 anelli reggispinta Ø 27x2,7 2 anelli rasamento Ø 23x2,7
FIAT	600 - 600 D	TUTTI I TIPI			869770	**PF002**	2 perni con foro 4 boccole di bronzo 4 anelli reggispinta Ø 24x2,7 2 anelli rasamento Ø 23x2,7
FIAT	600 E - 850	TUTTI I TIPI			866770	**PF003**	2 perni con foro 4 boccole di bronzo 4 anelli reggispinta Ø 27x2,7 2 anelli rasamento Ø 23x2,7

CORAM	APPLICAZIONE	ORIGINALE
PF000	FIAT	901085
PF000	FIAT	985783
PF000	FIAT	4230533
PF000	FIAT	869765
PF000	FIAT	899499
PF000	FIAT	869763
PF001	FIAT	
PF002	FIAT	869770
PF002	FIAT	4230533
PF002	FIAT	869765
PF002	FIAT	899499
PF003	FIAT	866770
PF003	FIAT	4230533
PF003	FIAT	869765
PF003	FIAT	899499

CUSCINETTI SCATOLA CAMBIO - GEARBOX BEARINGS - BUTEES POUR BOITE DE VITESSES

TIPO	Modello	Versione	Dimensioni	Anno	Rif Originale	Rif Coram	Note
FIAT	UNO	Tutti i tipi \ All types \ Tous types	67x28x18		59926780	**CS001**	

CS001